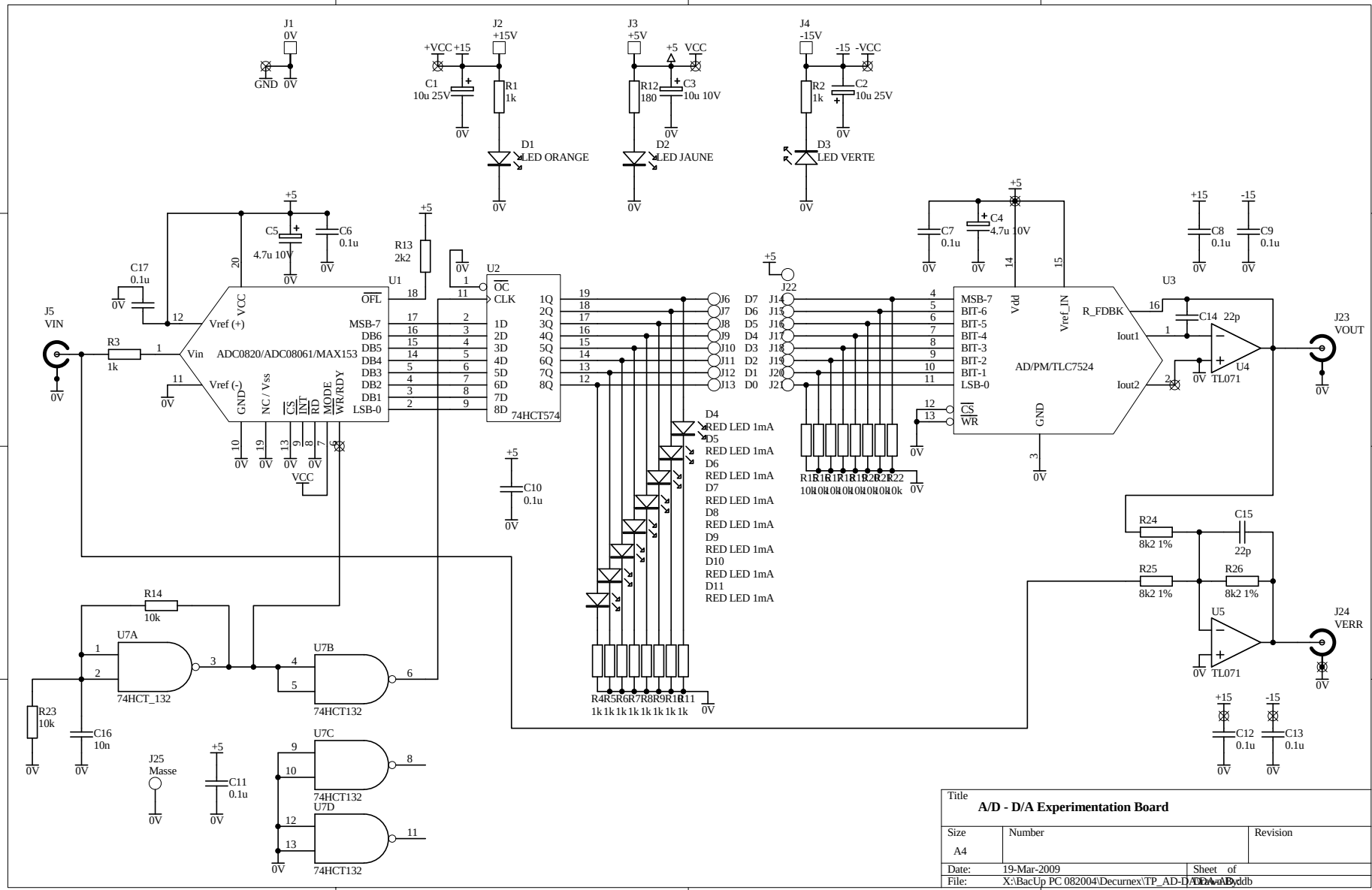
J1
0V
GND
J2
+15V
+VCC +15
C1
10u 25V
R1
1k
D1
LED ORANGE
J3
+5V
+5 VCC
R12
180
C3
10u 10V
D2
LED JAUNE
J4
-15V
-15 -VCC
R2
1k
C2
10u 25V
D3
LED VERTE
C5
4.7u 10V
C6
0.1u
C17
0.1u
R13
2k2
U1
ADC0820/ADC08061/MAX153
Vref (+)
Vin
Vref (-)
VCC
GND
NC / Vss
CS
INT
RD
MODE
WR/RDY
OFL
MSB-7
DB6
DB5
DB4
DB3
DB2
DB1
LSB-0
J5
VIN
R3
1k
U2
74HCT574
OC
CLK
1D
2D
3D
4D
5D
6D
7D
8D
1Q
2Q
3Q
4Q
5Q
6Q
7Q
8Q
C10
0.1u
D4
RED LED 1mA
D5
RED LED 1mA
D6
RED LED 1mA
D7
RED LED 1mA
D8
RED LED 1mA
D9
RED LED 1mA
D10
RED LED 1mA
D11
RED LED 1mA
R4 R5 R6 R7 R8 R9 R10 R11
1k 1k 1k 1k 1k 1k 1k 1k
J22
J6 D7 J14
J7 D6 J15
J8 D5 J16
J9 D4 J17
J10 D3 J18
J11 D2 J19
J12 D1 J20
J13 D0 J21
R10 R11 R12 R13 R14 R15 R16 R17 R18 R19 R20 R21 R22
10k 10k 10k 10k 10k 10k 10k 10k 10k 10k 10k 10k 10k
C7
0.1u
C4
4.7u 10V
U3
AD/PM/TLC7524
MSB-7
BIT-6
BIT-5
BIT-4
BIT-3
BIT-2
BIT-1
LSB-0
Vdd
Vref_IN
R_FDBK
Iout1
Iout2
CS
WR
GND
C14 22p
U4
TL071
C8
0.1u
C9
0.1u
J23
VOUT
R24
8k2 1%
C15
22p
R25
8k2 1%
R26
8k2 1%
U5
TL071
J24
VERR
C12
0.1u
C13
0.1u
R14
10k
U7A
74HCT_132
U7B
74HCT132
R23
10k
C16
10n
J25
Masse
C11
0.1u
U7C
74HCT132
U7D
74HCT132
Title
A/D - D/A Experimentation Board
Size
A4
Number
Revision
Date: 19-Mar-2009
Sheet of
File: X:\BacUp PC 082004\Decurnex\TP_AD-DA\DA-AD.ddb
Drawn By: