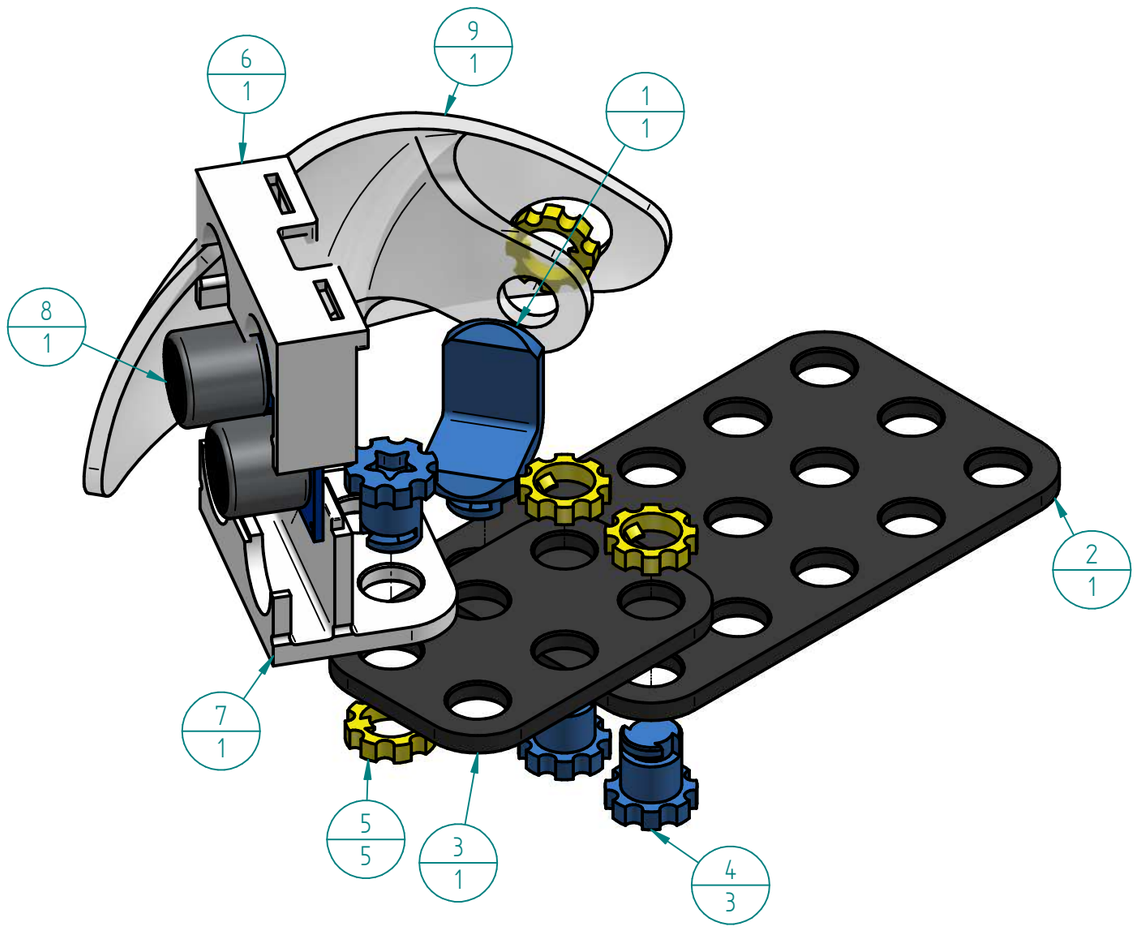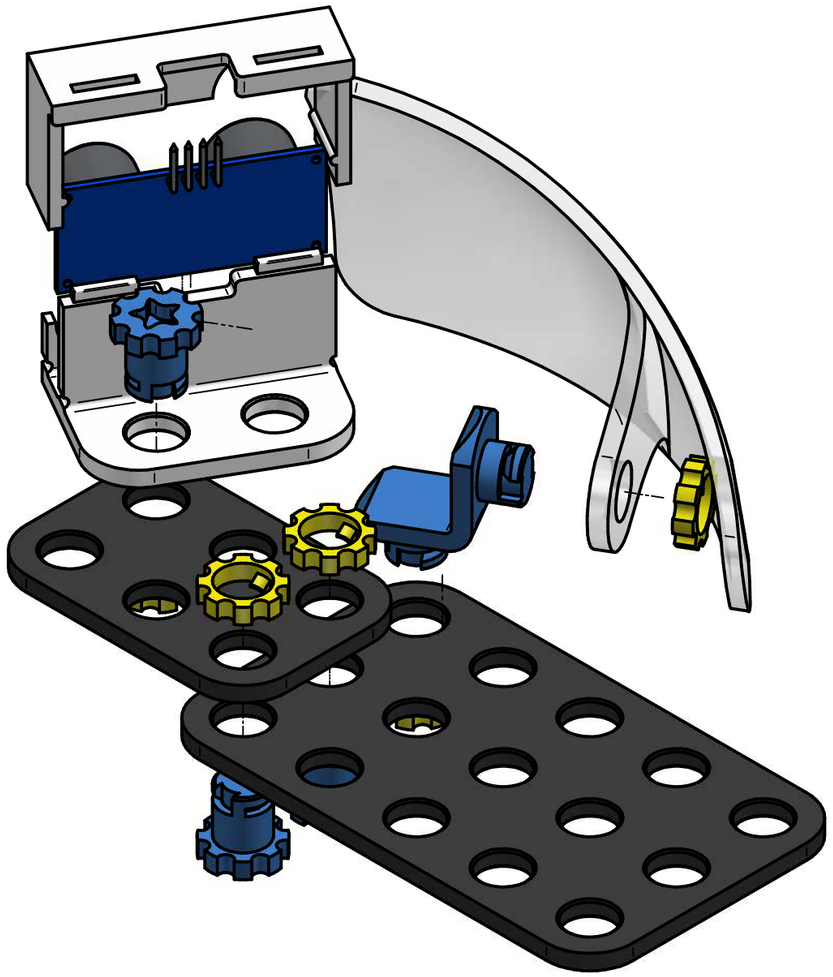Item Number	Part Name	Quantity
1	Bracket	1
2	Plate 5x3	1
3	Plate 3x2	1
4	Simple Bolt L2	3
5	Nut	5
6	Ultrasonic Sensor Case Part 1	1
7	Ultrasonic Sensor Case Part 2	1
8	Ultrasonic Sensor HC-SR04	1
9	Shell	1