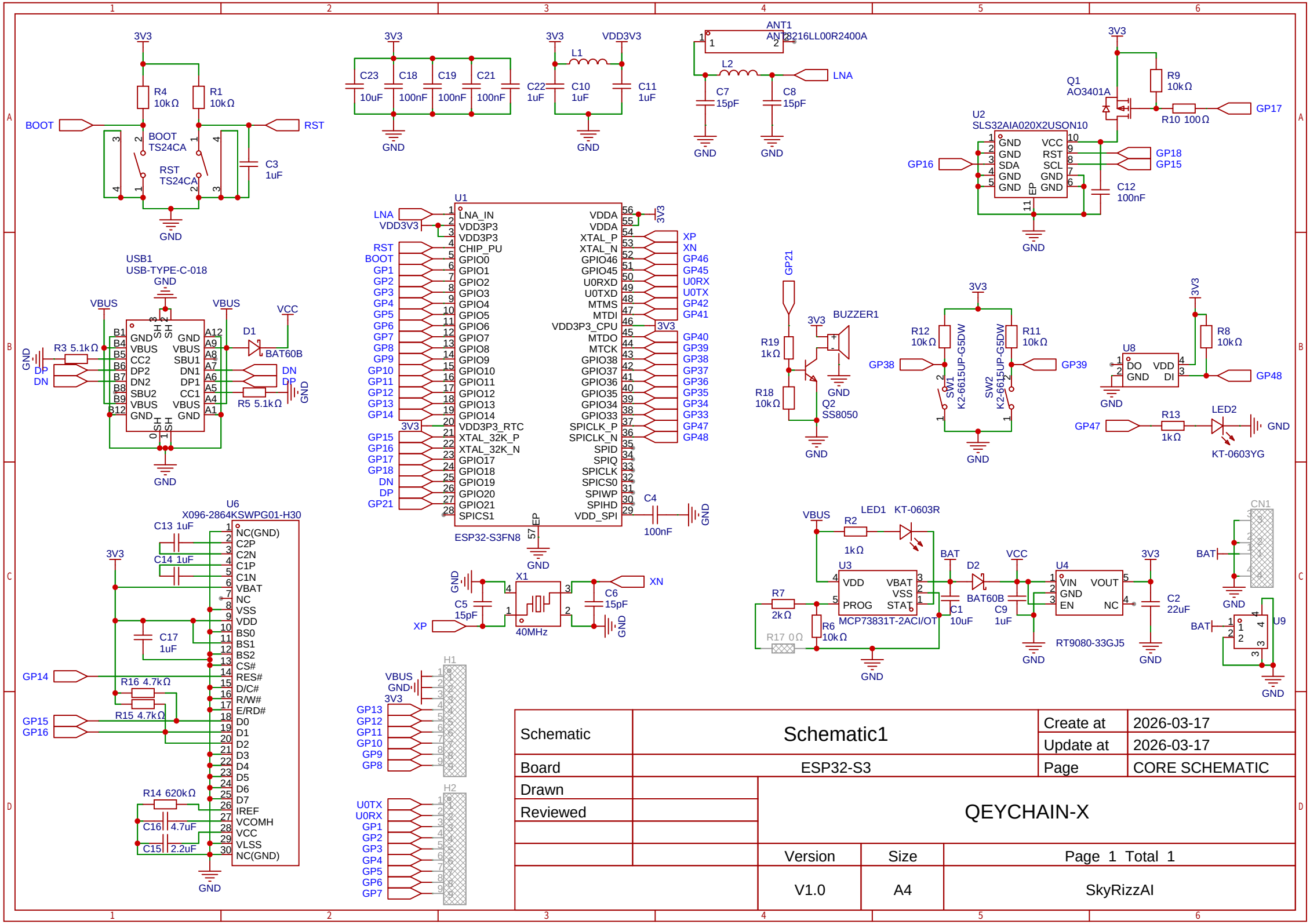

Schematic	Schematic1	Create at	2026-03-17
		Update at	2026-03-17
Board	ESP32-S3	Page	CORE SCHEMATIC
Drawn			
Reviewed			
		QEYCHAIN-X	
		Version	Size	Page 1 Total 1
		V1.0	A4	SkyRizzAI