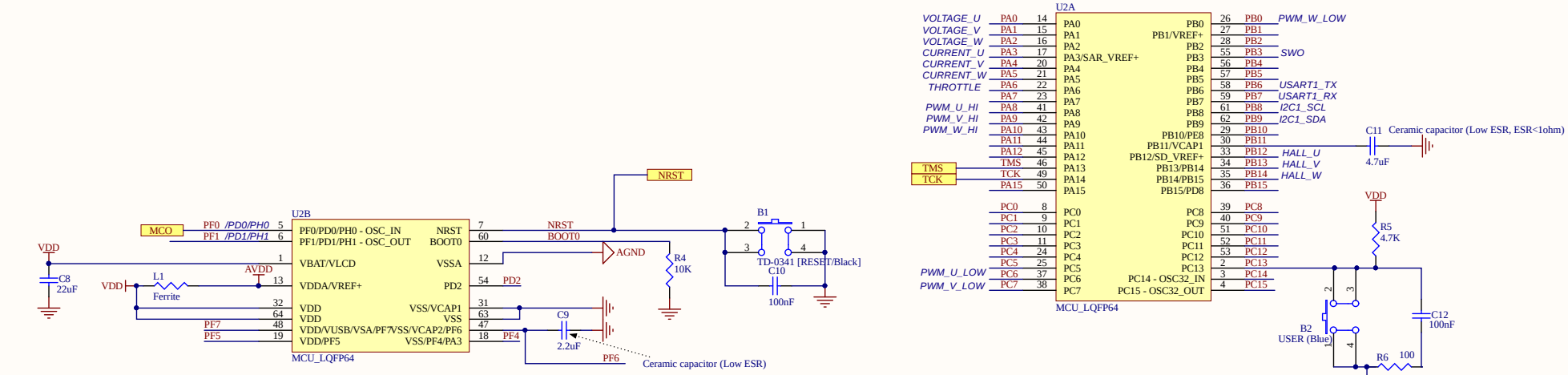

Extension connectors

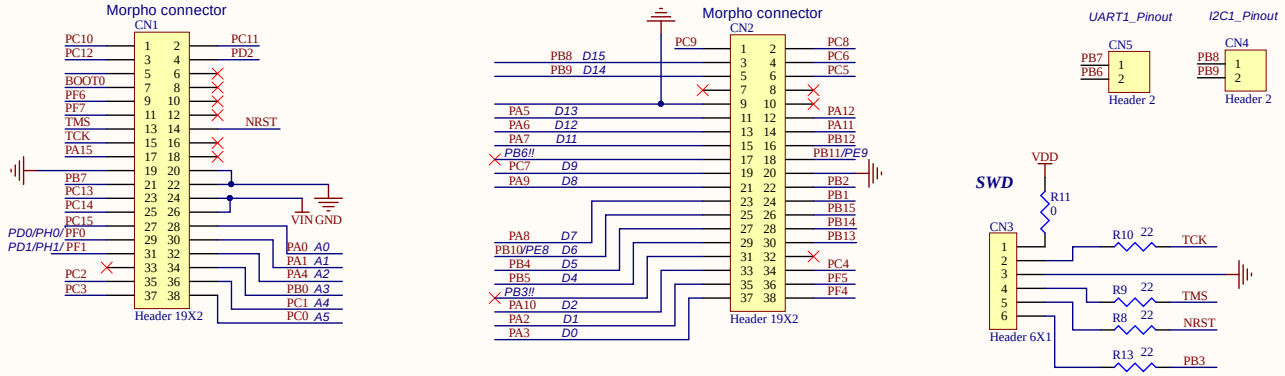

Power Caps and LDO Circuit

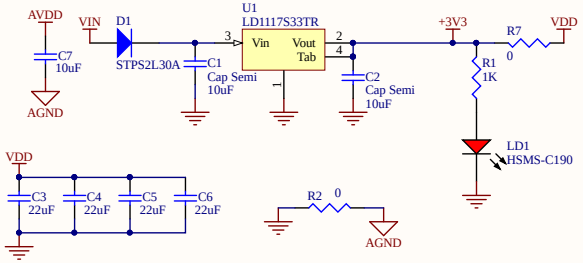

Title	*FEV-60_Motor_uC.SchDoc*		
Revision:	Number:*	Team Skytanic	Senior Design 2019/2020
Date: 11/19/2019		Sheet* of *	
File: C:\Users\ryanz\Senior Design\Hardware\FEV-60_Motor_uC\FEV-60_Motor_uC.SchDoc			

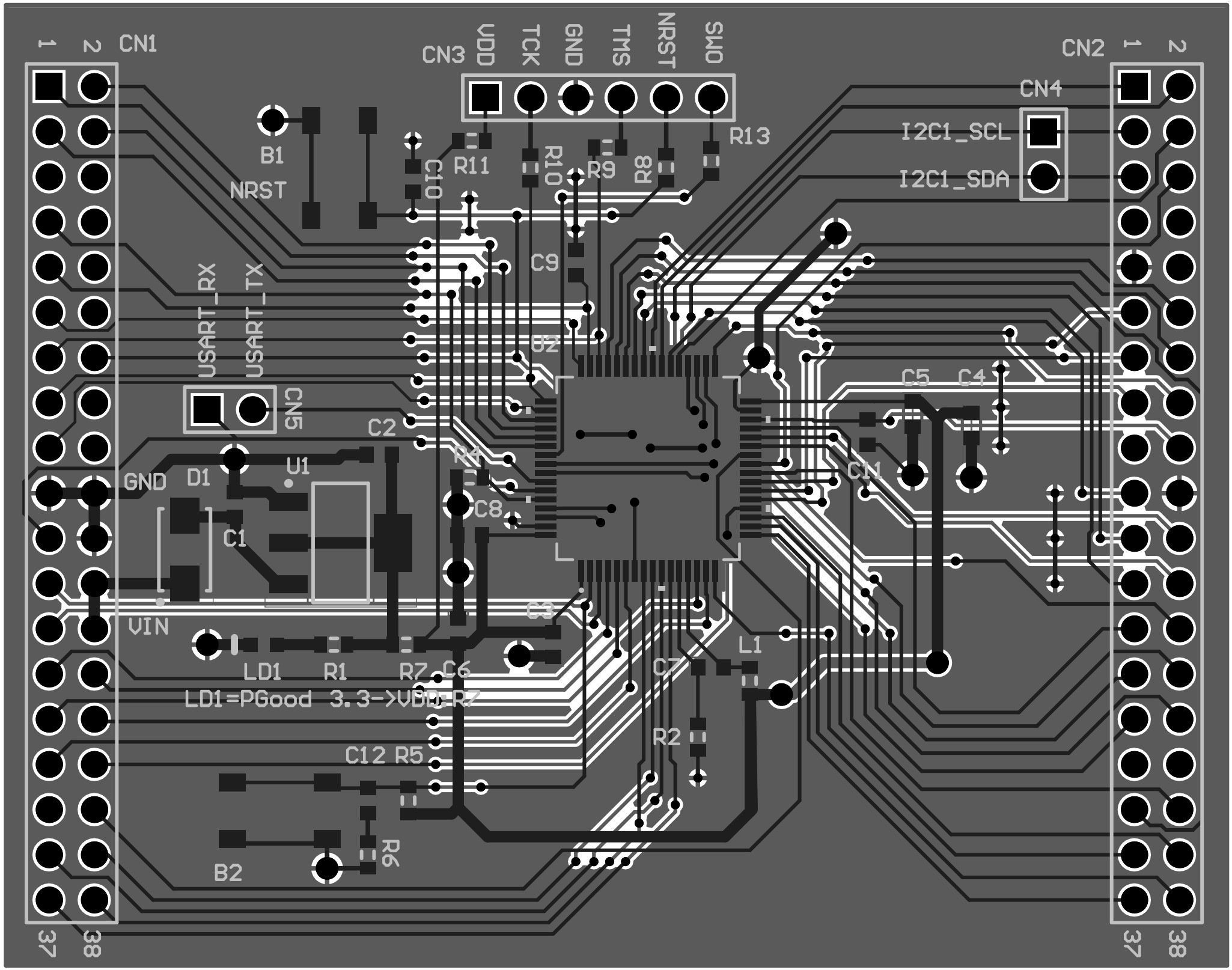
CN1
1
2
37
38
CN3
VDD
TCK
GND
TMS
NRST
SWO
CN2
CN4
I2C1_SCL
I2C1_SDA
B1
NRST
R13
R11
R10
R9
R8
C10
C9
U2
USART_RX
USART_TX
CN5
C2
U1
D1
GND
C1
R4
C8
C5
C4
C11
VIN
C3
LD1
R1
R7
C6
C7
L1
LD1=PGood 3.3->VDD
R2
C12
R5
R6
B2