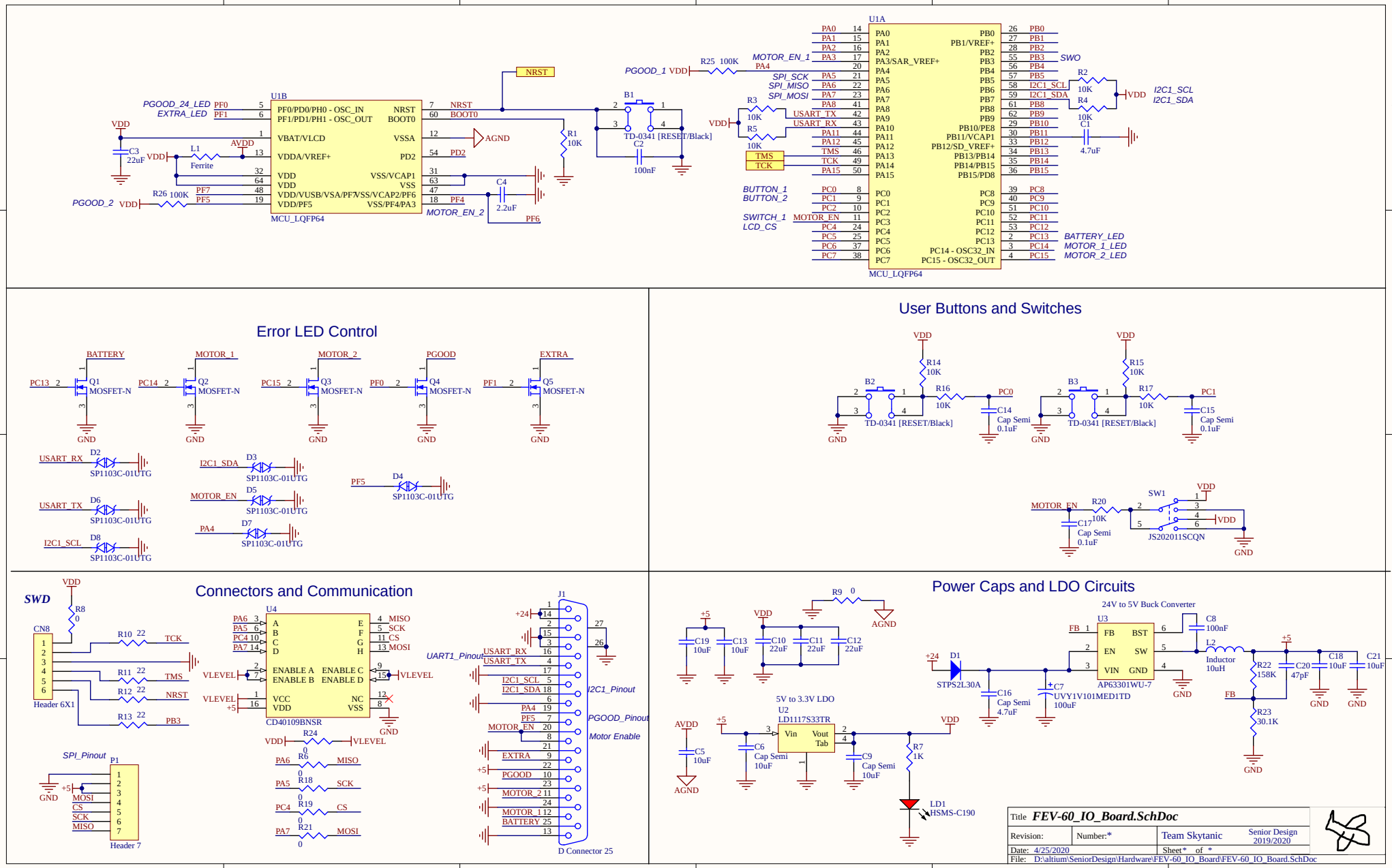
U1B
MCU_LQFP64
PF0/PD0/PH0 - OSC_IN
PF1/PD1/PH1 - OSC_OUT
VBAT/VLCD
VDDA/VREF+
VDD
VSS/VCAP1
VSS/VCAP2/PF6
VSS/PF4/PA3
NRST
BOOT0
VSSA
PD2
PGOOD_24_LED
EXTRA_LED
PGOOD_2
MOTOR_EN_2
AGND
U1A
PA3/SAR_VREF+
PB0
PB1/VREF+
PB2
PB3
PB4
PB5
PB6
PB7
PB8
PB9
PB10/PE8
PB11/VCAP1
PB12/SD_VREF+
PB13/PB14
PB14/PB15
PB15/PD8
PC14 - OSC32_IN
PC15 - OSC32_OUT
PGOOD_1
MOTOR_EN_1
SPI_SCK
SPI_MISO
SPI_MOSI
USART_TX
USART_RX
TMS
TCK
BUTTON_1
BUTTON_2
SWITCH_1
LCD_CS
MOTOR_EN
SWO
I2C1_SCL
I2C1_SDA
BATTERY_LED
MOTOR_1_LED
MOTOR_2_LED
TD-0341 [RESET/Black]
Ferrite
Error LED Control
BATTERY
MOTOR_1
MOTOR_2
PGOOD
EXTRA
MOSFET-N
SP1103C-01UTG
User Buttons and Switches
Cap Semi
JS202011SCQN
Connectors and Communication
SWD
Header 6X1
CD40109BNSR
SPI_Pinout
Header 7
UART1_Pinout
I2C1_Pinout
PGOOD_Pinout
Motor Enable
D Connector 25
Power Caps and LDO Circuits
24V to 5V Buck Converter
AP63301WU-7
STPS2L30A
UVY1V101MED1TD
5V to 3.3V LDO
LD1117S33TR
HSMS-C190
Title FEV-60_IO_Board.SchDoc
Revision:
Number:*
Team Skytanic
Senior Design 2019/2020
Date: 4/25/2020
Sheet* of *
File: D:\altium\SeniorDesign\Hardware\FEV-60_IO_Board\FEV-60_IO_Board.SchDoc