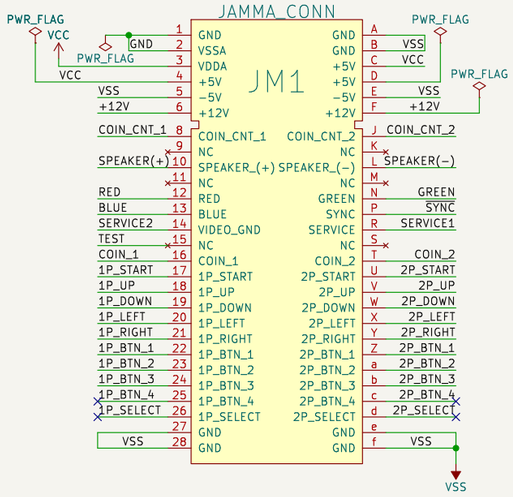

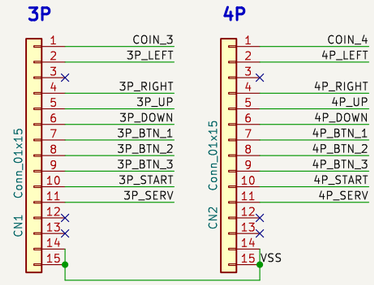

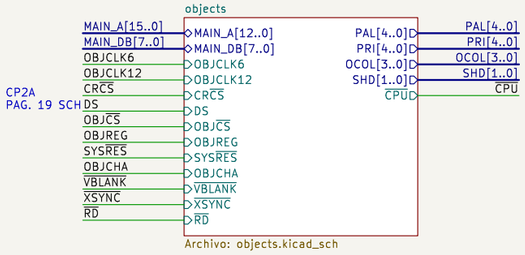

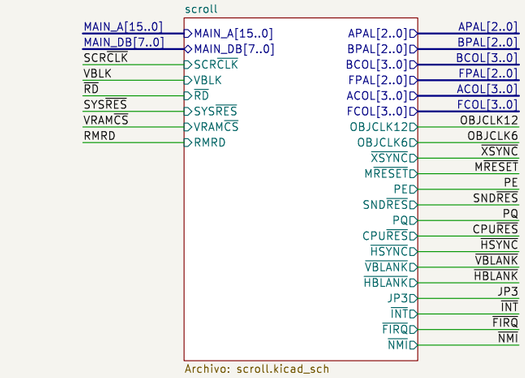

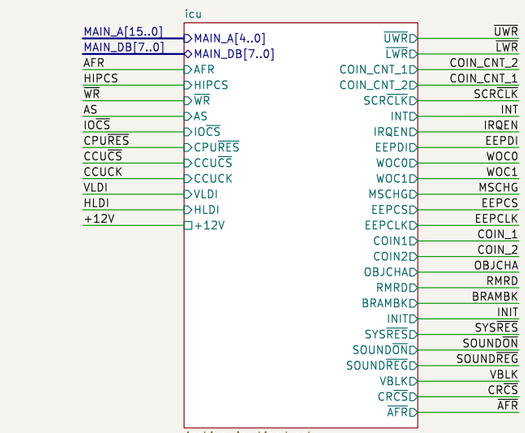

These schematics cover the missing pages in the original ones published by the maker. Signal names existing in the original pages have been preserved. New signal names try to follow the maker style or are taken from similar schematics of the same maker.

JOTEGO
www.patreon.com/jotego
JOTEGO
KONAMI PWB352292A

Sheet: /
File: vendetta.kicad_sch

Title: Vendetta

Size: A3	Date: 2023−08−09	**Rev: José Tejada G.**
KiCad E.D.A. kicad−cli 7.0.10−7.0.10-ubuntu20.04.1		Id: 1/4

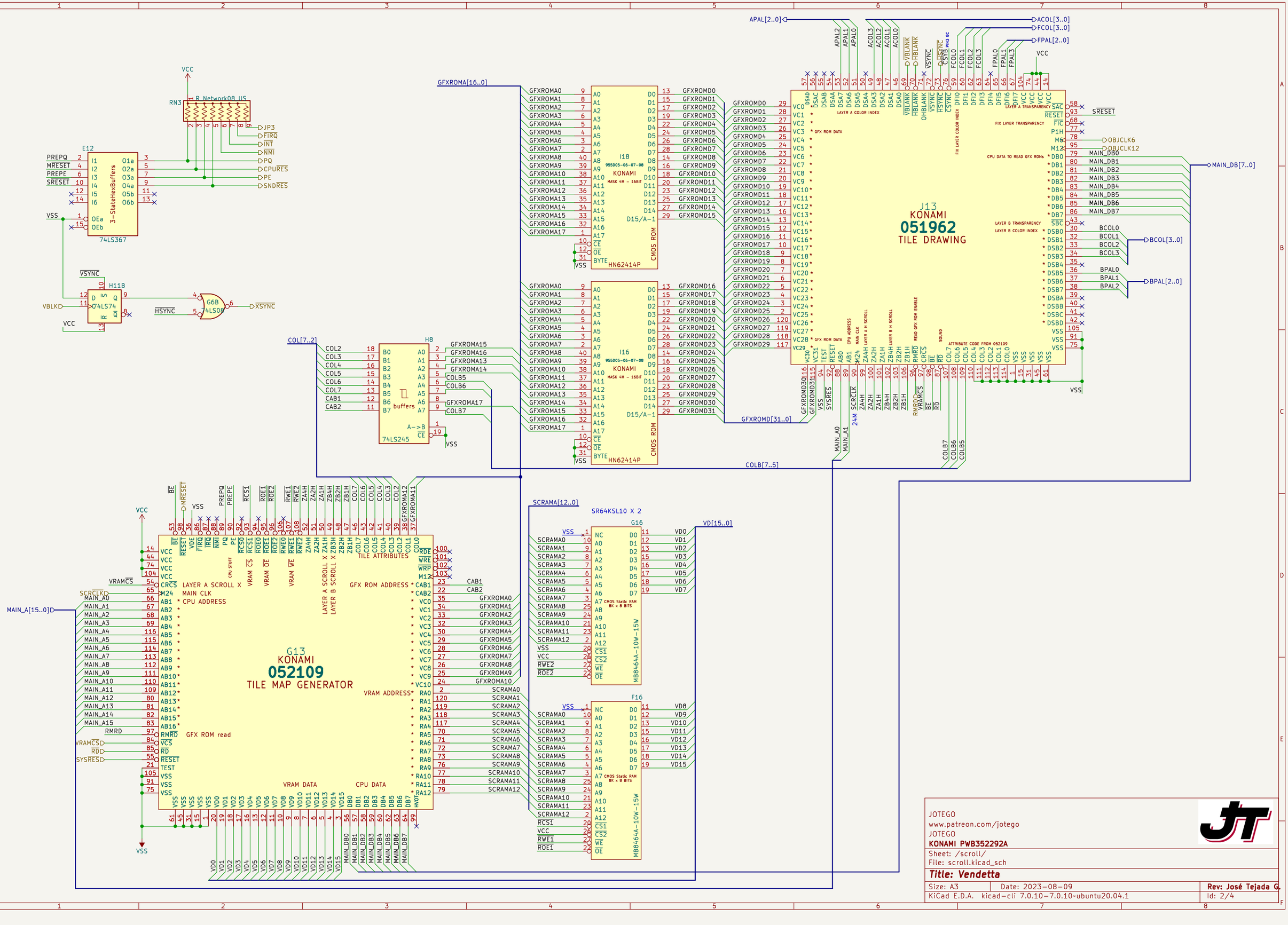
APAL[2..0]
ACOL[3..0]
FCOL[3..0]
FPAL[2..0]
VCC
GFXROMA[16..0]
GFXROMD[31..0]
MAIN_DB[7..0]
BCOL[3..0]
BPAL[2..0]
COLB[7..5]
SCRAMA[12..0]
VD[15..0]
MAIN_A[15..0]
RN3
R_NetworkOR_US
JP3
FIRQ
INT
NMI
PQ
CPURES
PE
SNDRES
E12
74LS367
3-StateHexBuffers
H11B
74LS74
G6B
74LS08
VSYNC
HSYNC
XSYNC
VBLK
H8
74LS245
buffers
I18
I16
955D05-06-07-08
KONAMI
MASK 4M - 16BIT
HN62414P
CMOS ROM
J13
KONAMI
051962
TILE DRAWING
LAYER A COLOR INDEX
GFX ROM DATA
LAYER A TRANSPARENCY
FIX LAYER TRANSPARENCY
FIX LAYER COLOR INDEX
CPU DATA TO READ GFX ROMs
LAYER B TRANSPARENCY
LAYER B COLOR INDEX
ATTRIBUTE CODE FROM 052109
CPU ADDRESS
MAIN CLK
LAYER A H SCROLL
LAYER B H SCROLL
READ GFX ROM ENABLE
SOUND
SRESET
OBJCLK6
OBJCLK12
MAIN_DB0
MAIN_DB1
MAIN_DB2
MAIN_DB3
MAIN_DB4
MAIN_DB5
MAIN_DB6
MAIN_DB7
G13
KONAMI
052109
TILE MAP GENERATOR
TILE ATTRIBUTES
LAYER A SCROLL X
LAYER B SCROLL X
GFX ROM ADDRESS
VRAM ADDRESS
VRAM DATA
CPU DATA
GFX ROM read
SR64KSL10 X 2
G16
F16
MB84644A-10W-15W
CMOS Static RAM
8K x 8 BITS
JOTEGO
www.patreon.com/jotego
JOTEGO
KONAMI PWB352292A
Sheet: /scroll/
File: scroll.kicad_sch
Title: Vendetta
Size: A3
Date: 2023-08-09
Rev: José Tejada G.
KiCad E.D.A. kicad-cli 7.0.10-7.0.10-ubuntu20.04.1
Id: 2/4

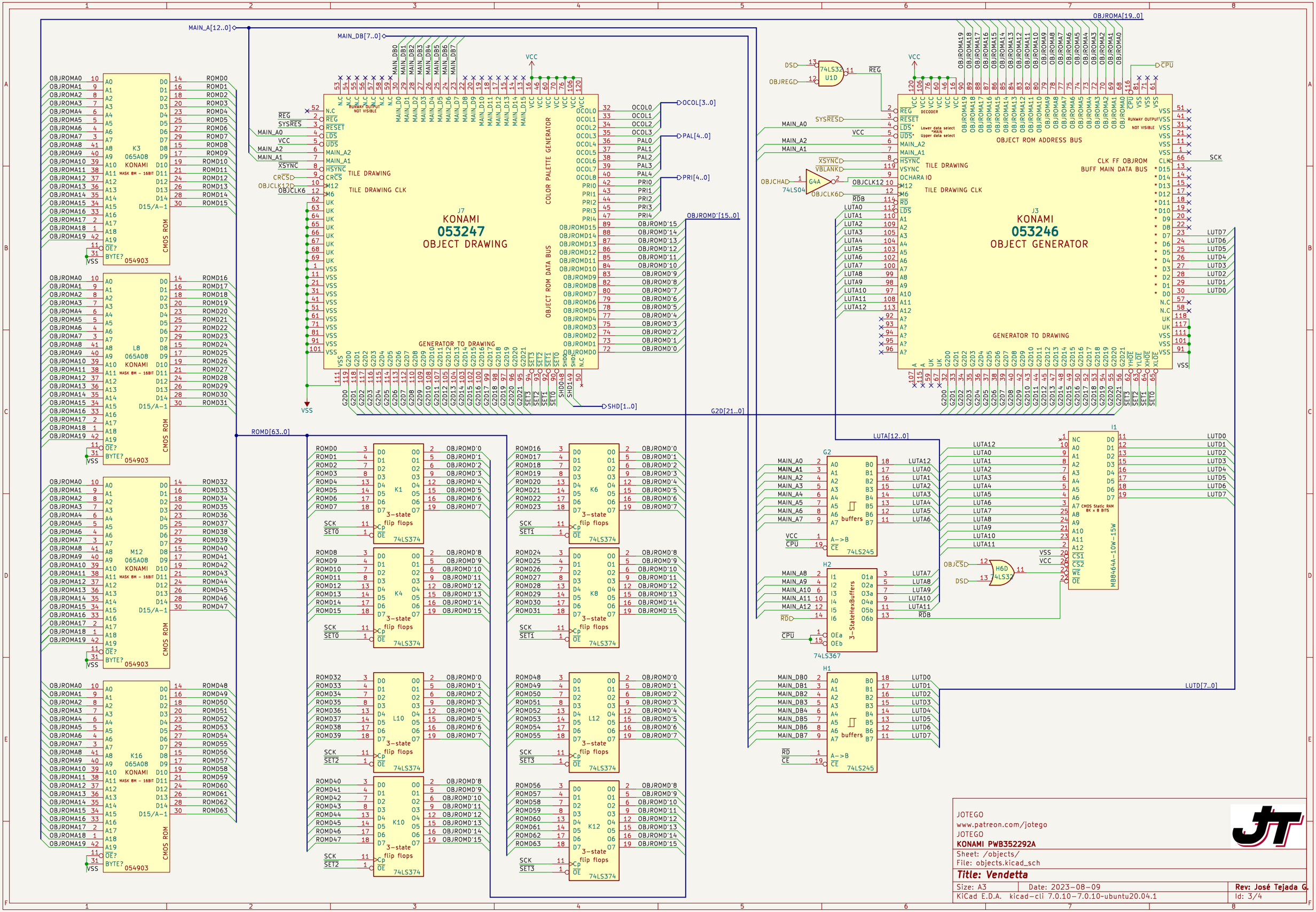

JOTEGO
www.patreon.com/jotego
JOTEGO
KONAMI PWB352292A
Sheet: /objects/
File: objects.kicad_sch

Title: Vendetta

Size: A3	Date: 2023-08-09	**Rev: José Tejada G.**
KiCad E.D.A. kicad-cli 7.0.10-7.0.10~ubuntu20.04.1		Id: 3/4

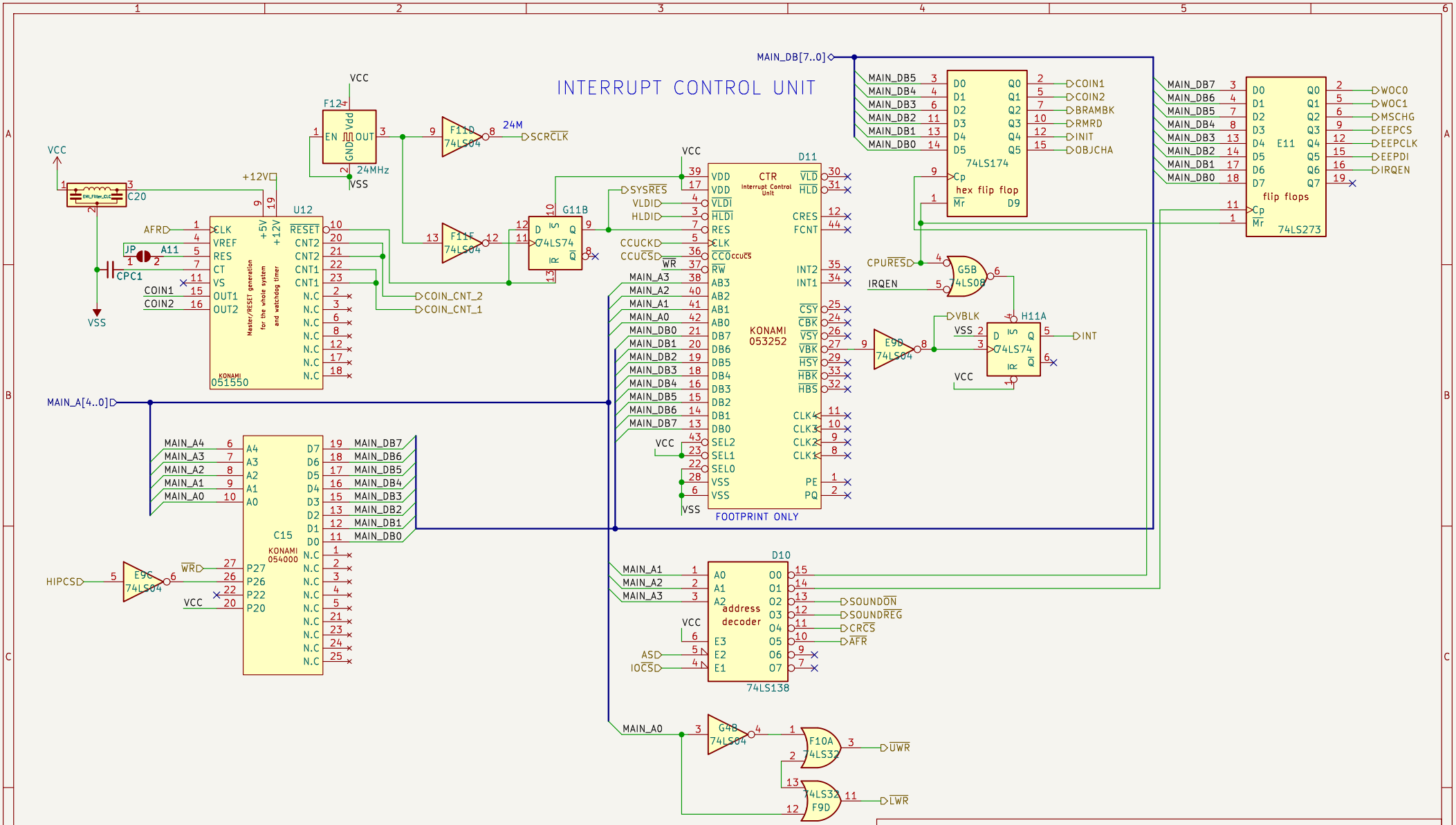

JOTEGO
www.patreon.com/jotego
JOTEGO
KONAMI PWB352292A

Sheet: /icu/
File: icu.kicad_sch

Title: Vendetta

Size: A4	Date: 2023-08-09	**Rev: José Tejada G.**
KiCad E.D.A. kicad-cli 7.0.10-7.0.10~ubuntu20.04.1		Id: 4/4