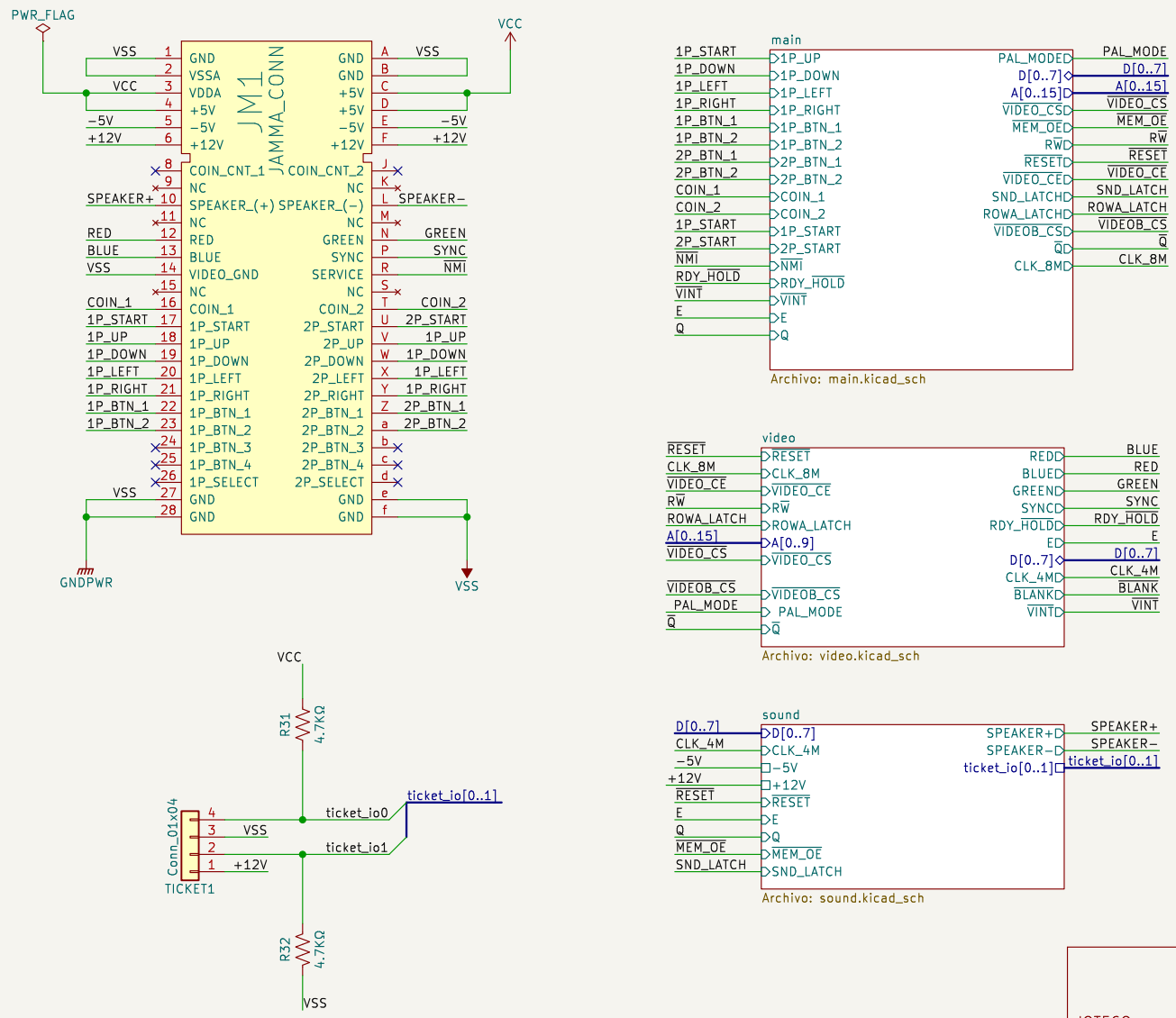

JOTEGO

JOTEGO

Sheet: /

File: bowl.kicad_sch

Title: Beer Frame Bowling

Size: A4	Date: 2022-06-06	**Rev: José Tejada G.**
KiCad E.D.A. kicad-cli 7.0.10-7.0.10~ubuntu20.04.1		Id: 1/5

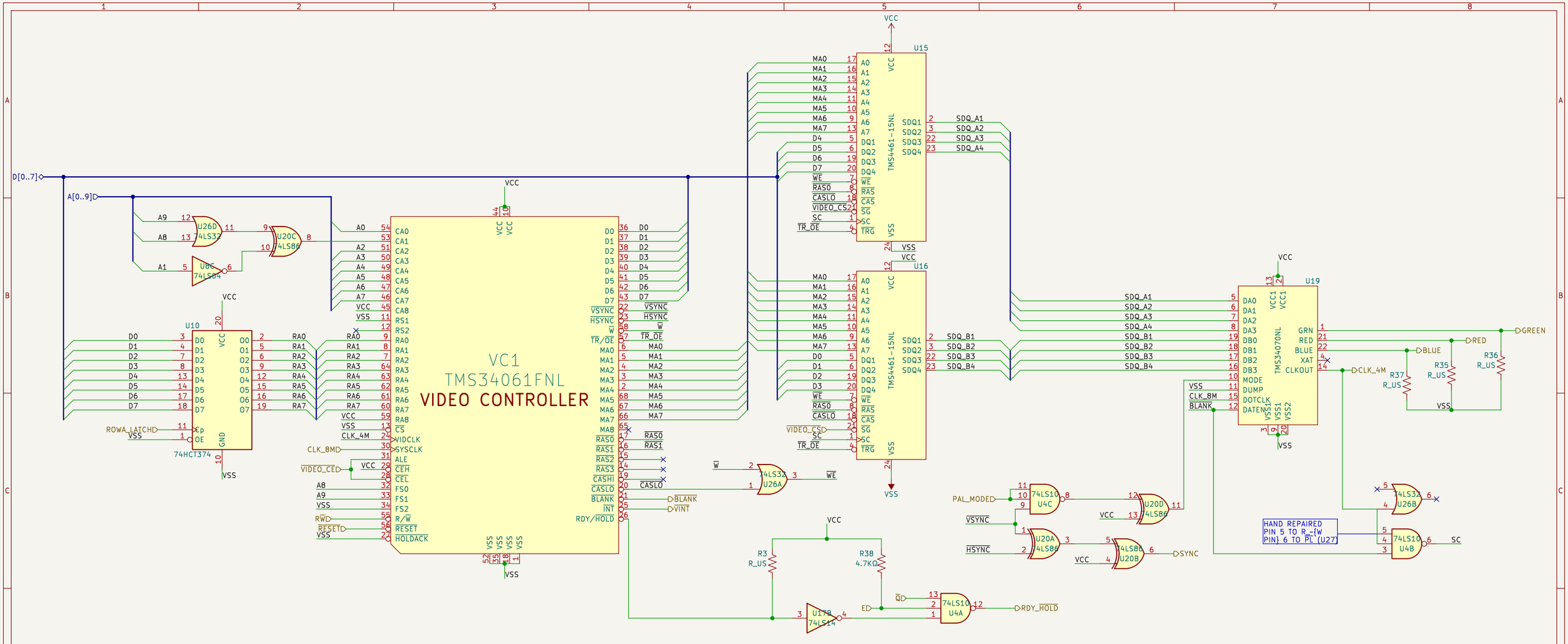

NOT MOUNTED

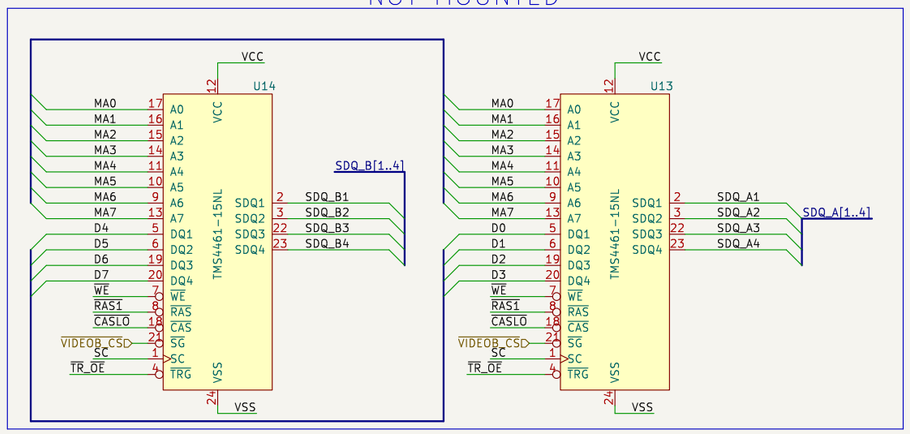

U20E 74LS86

74LS76 U3C

74LS10 U4D

JOTEGO
JOTEGO
Sheet: /video/
File: video.kicad_sch

Title: Beer Frame Bowling

Size: A3	Date: 2022-06-06	**Rev: José Tejada G.**
KiCad E.D.A. kicad-cli 7.0.10-7.0.10~ubuntu20.04.1		Id: 2/5

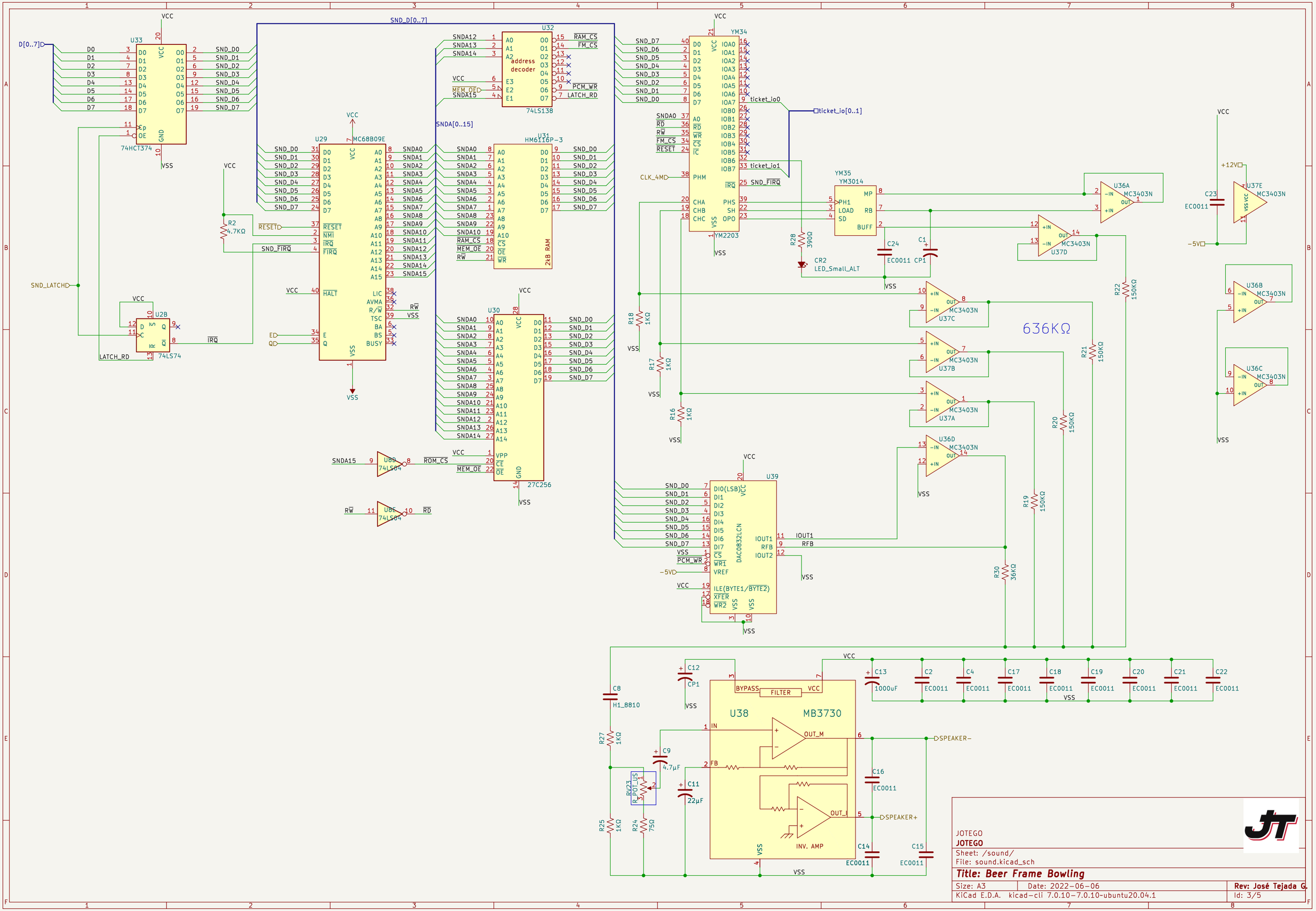

JOTEGO

JOTEGO

Sheet: /sound/

File: sound.kicad_sch

Title: Beer Frame Bowling

Size: A3	Date: 2022-06-06	**Rev: José Tejada G.**
KiCad E.D.A. kicad-cli 7.0.10-7.0.10-ubuntu20.04.1		Id: 3/5

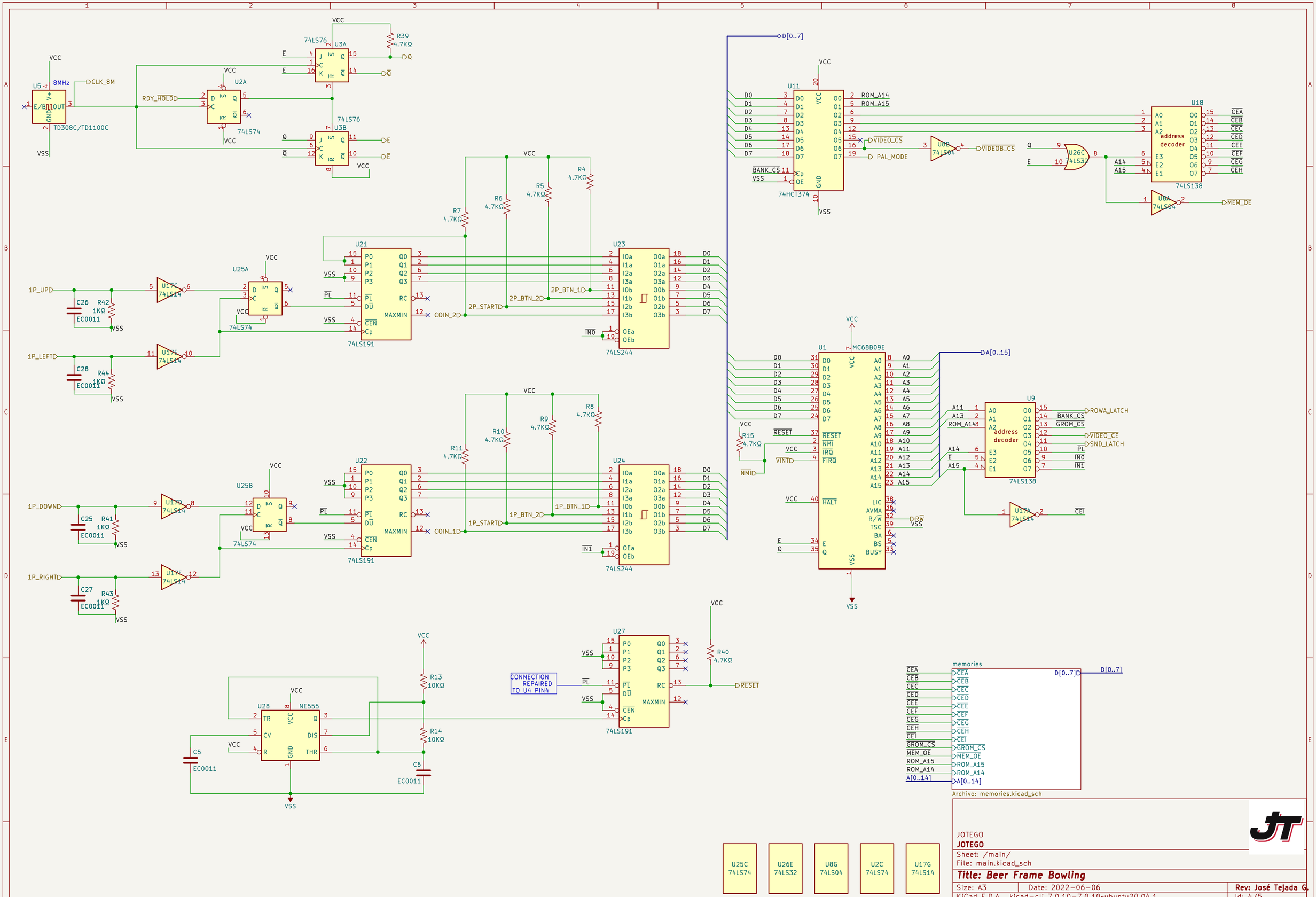
U5
8MHz
CLK_8M
TD308C/TD1100C
VCC
VSS
U2A
74LS74
RDY_HOLD
74LS76
U3A
U3B
R39
4.7KΩ
U11
74HCT374
D[0..7]
ROM_A14
ROM_A15
VIDEO_CS
PAL_MODE
BANK_CS
U8B
74LS04
VIDEOB_CS
U26C
74LS32
U18
address decoder
74LS138
MEM_OE
U8A
U21
U22
U23
U24
U25A
U25B
U17C
U17E
U17D
U17F
74LS14
1P_UP
1P_LEFT
1P_DOWN
1P_RIGHT
C26
C28
C25
C27
EC0011
R42
R44
R41
R43
1KΩ
74LS191
MAXMIN
COIN_2
COIN_1
2P_BTN_2
2P_BTN_1
1P_BTN_2
1P_BTN_1
2P_STARTD
1P_STARTD
74LS244
U1
MC68B09E
A[0..15]
RESET
NMI
IRQ
FIRQ
HALT
R15
4.7KΩ
U9
ROWA_LATCH
BANK_CS
GROM_CS
VIDEO_CE
SND_LATCH
IN0
IN1
CEI
U27
CONNECTION REPAIRED TO U4 PIN4
R40
4.7KΩ
U28
NE555
R13
10KΩ
R14
10KΩ
C5
C6
memories
D[0..7]
CEA
CEB
CEC
CED
CEE
CEF
CEG
CEH
GROM_CS
MEM_OE
ROM_A15
ROM_A14
A[0..14]
Archivo: memories.kicad_sch
U25C 74LS74
U26E 74LS32
U8G 74LS04
U2C 74LS74
U17G 74LS14
JOTEGO
JOTEGO
Sheet: /main/
File: main.kicad_sch
Title: Beer Frame Bowling
Size: A3
Date: 2022-06-06
Rev: José Tejada G.
KiCad E.D.A. kicad-cli 7.0.10-7.0.10-ubuntu20.04.1
Id: 4/5

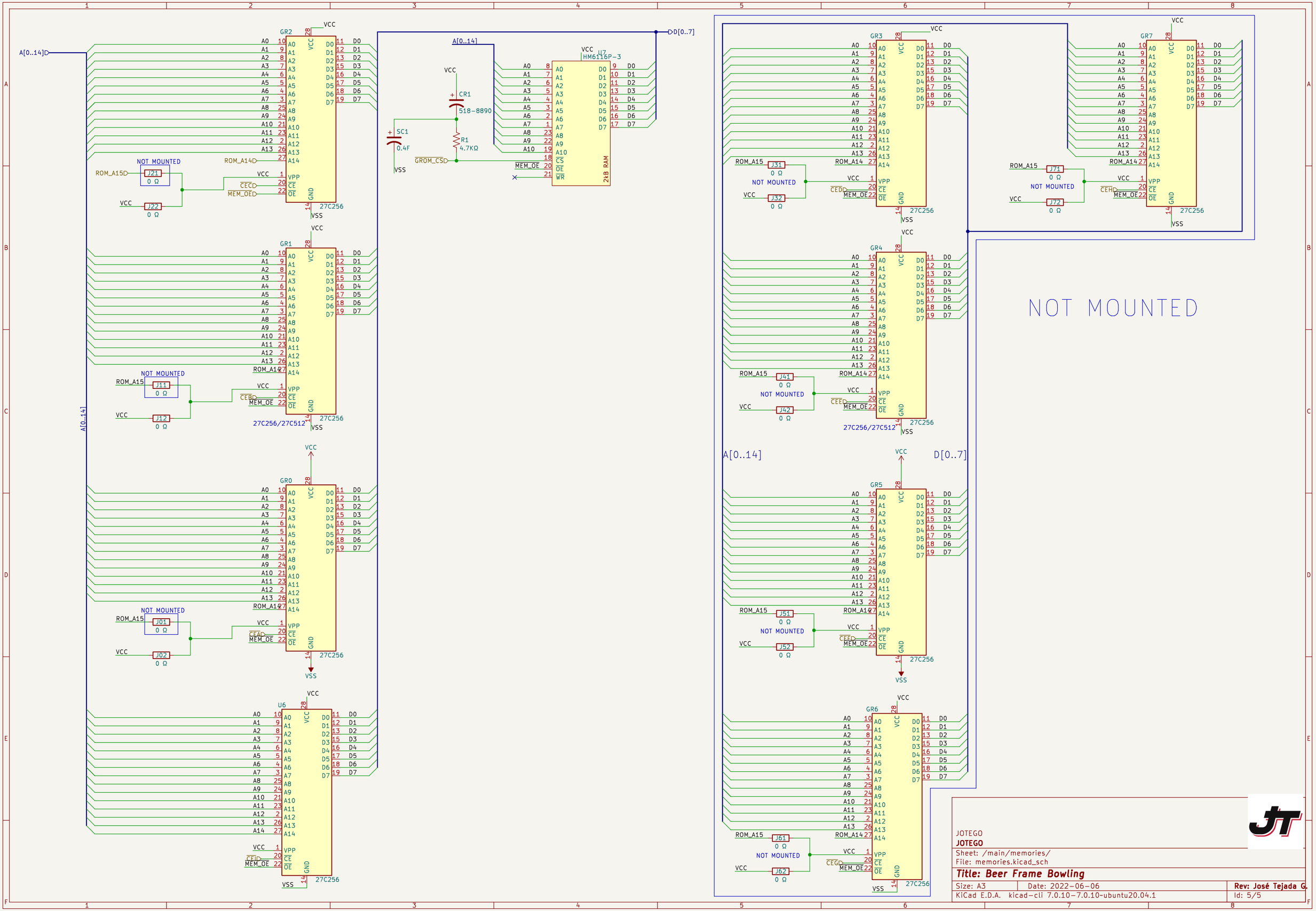
A[0..14]
D[0..7]
GR2
GR1
GR0
U6
U7
HM6116P-3
2kB RAM
CR1
518-8890
R1
4.7KΩ
SC1
0.4F
GROM_CS
MEM_OE
ROM_A14
ROM_A15
NOT MOUNTED
J21
J22
J11
J12
J01
J02
0 Ω
CEC
CEB
CEA
CEO
27C256
27C256/27C512
VCC
VSS
GR3
GR4
GR5
GR6
GR7
J31
J32
J41
J42
J51
J52
J61
J62
J71
J72
CED
CEE
CEF
CEG
CEH
NOT MOUNTED
JOTEGO
JOTEGO
Sheet: /main/memories/
File: memories.kicad_sch
Title: Beer Frame Bowling
Size: A3
Date: 2022-06-06
Rev: José Tejada G.
KiCad E.D.A. kicad-cli 7.0.10-7.0.10-ubuntu20.04.1
Id: 5/5