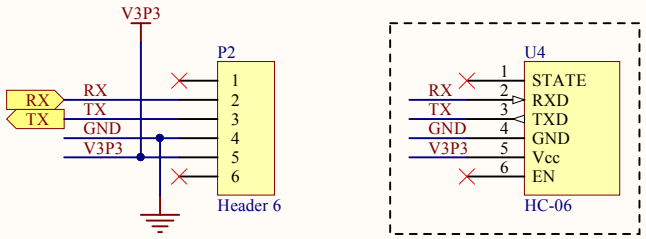

Title	***Serial to Bluetooth module***		
Size: A4	Number:*	Revision:*	
Date: 08/05/2016	Time: 18:07:15	Sheet* of *	
File: C:\Users\bocal\Desktop\schiad\Electronics\RainbowClock\Project\Shematics\Bluetooth.SchDoc			

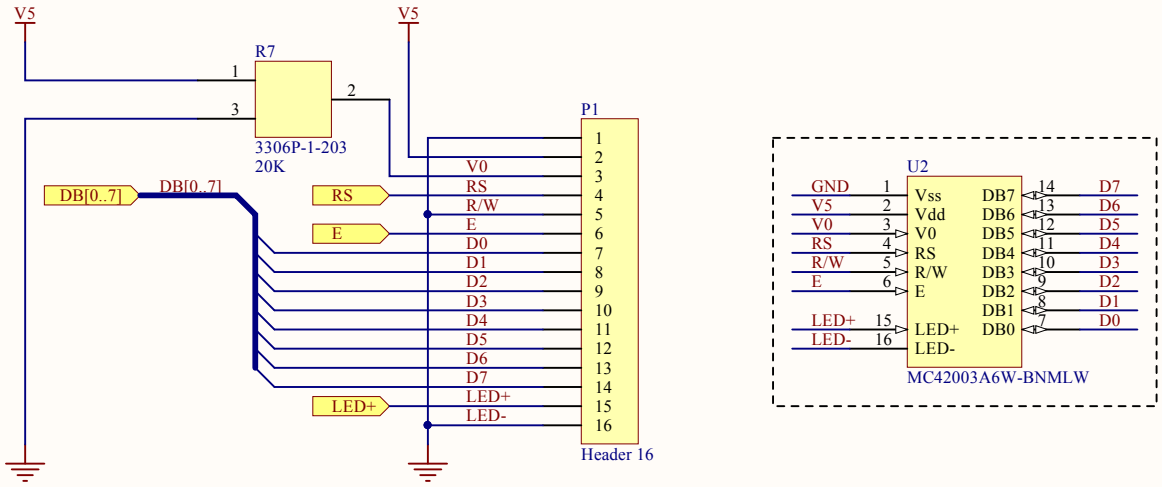

Title	*20x4 Characters LCD*		
Size: A4	Number:*	Revision:*	
Date: 08/05/2016	Time: 18:07:15	Sheet* of *	
File: C:\Users\bocal\Desktop\schiad\Electronics\RainbowClock\Project\Shematics\LCD.SchDoc			

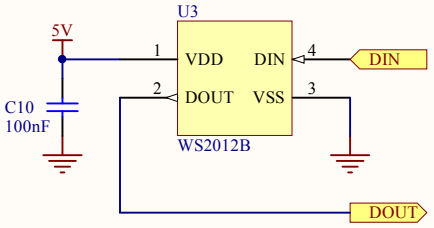

Title *Neopixel*			* * * * *
Size: A4	Number:*	Revision:*	
Date: 08/05/2016	Time: 18:07:15	Sheet* of *	
File: C:\Users\bocal\Desktop\schiad\Electronics\RainbowClock\Project\Shematics\Neopixel.SchDoc			

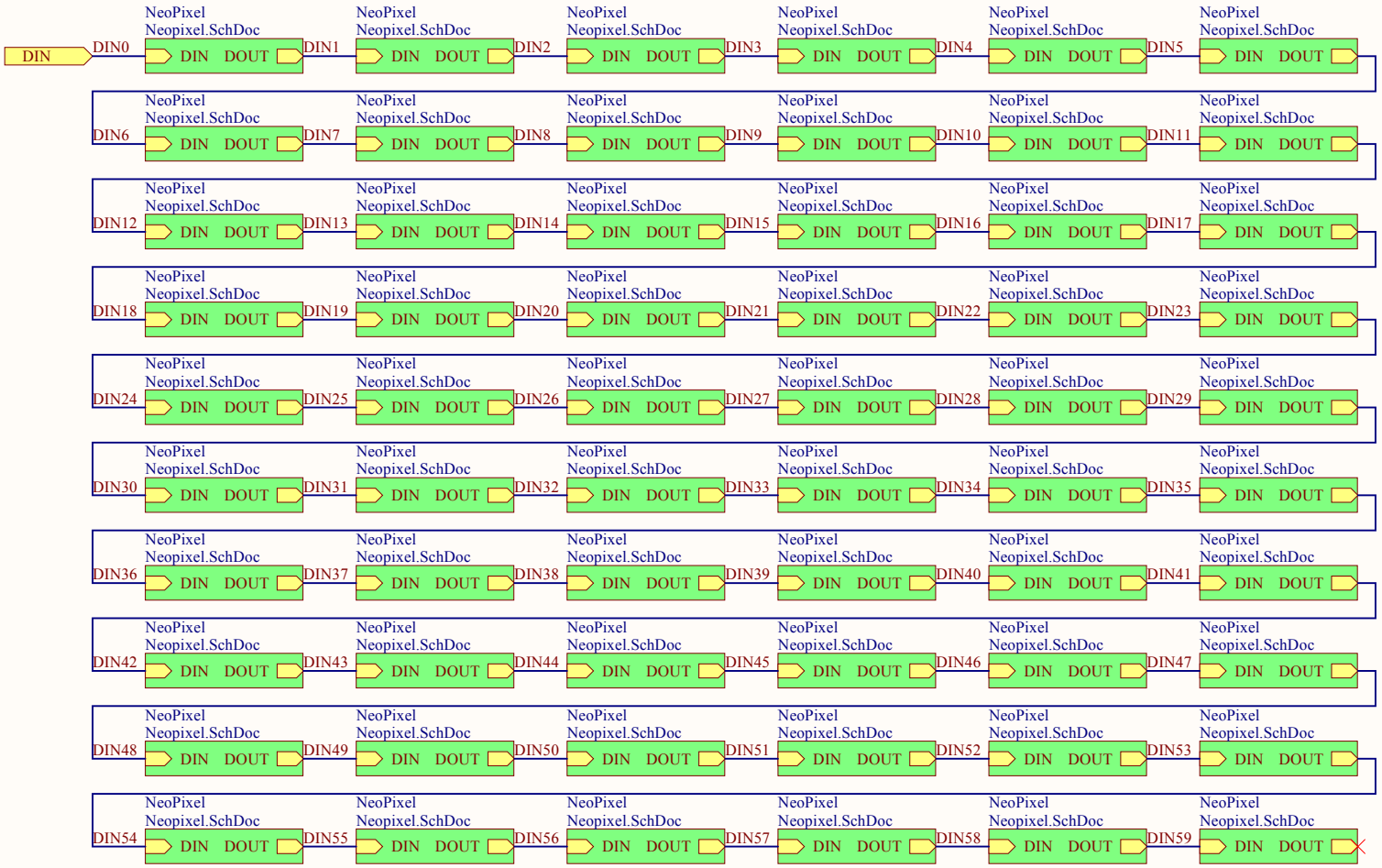

Title *Neopixel array*			*
Size: A4	Number:*	Revision:*	*
Date: 08/05/2016	Time: 18:07:15	Sheet* of *	*
File: C:\Users\bocal\Desktop\schiad\Electronics\RainbowClock\Project\Shematics\NeopixelArray.SchDoc			

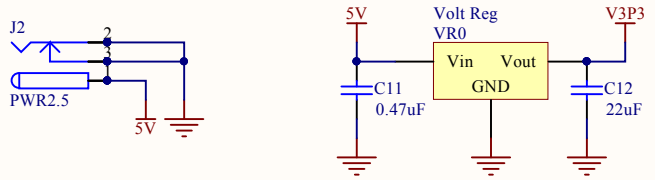

Title *			
Size: A4	Number:*	Revision:*	
Date: 08/05/2016	Time: 18:07:15	Sheet * of *	
File: C:\Users\bocal\Desktop\schiad\Electronics\RainbowClock\Project\Shematics\Power.SchDoc			

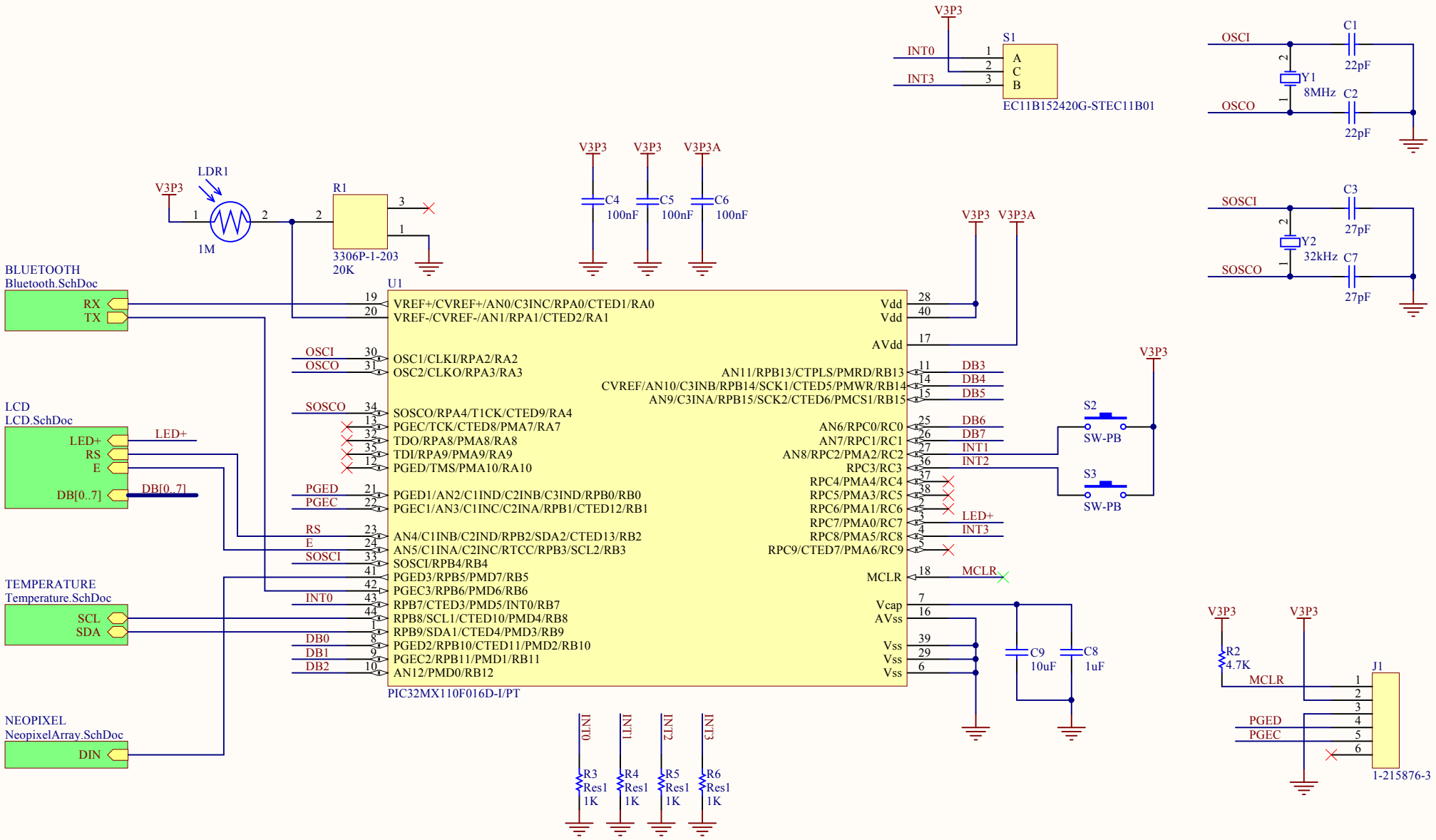

Title	***Rainbow Clock Project***		*In alphabetical order:*
Size: A4	Number:	Revision: A	*- schiad*
Date: 08/05/2016	Time: 18:07:15	Sheet* of *	*- vchesnea*
File: C:\Users\bocal\Desktop\schiad\Electronics\RainbowClock\Project\Shematics\RainbowClock.SchDoc			

Altium

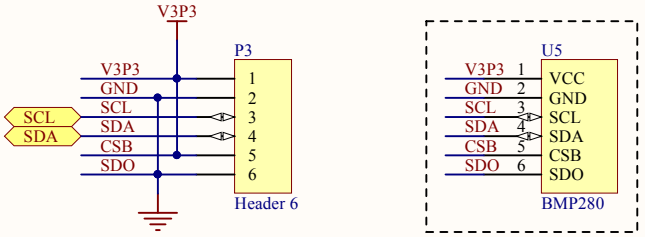

Title	***BMP280 Sensor***		
Size: A4	Number:*	Revision:*	
Date: 08/05/2016	Time: 18:07:16	Sheet * of *	
File: C:\Users\bocal\Desktop\schiad\Electronics\RainbowClock\Project\Shematics\Temperature.SchDoc			