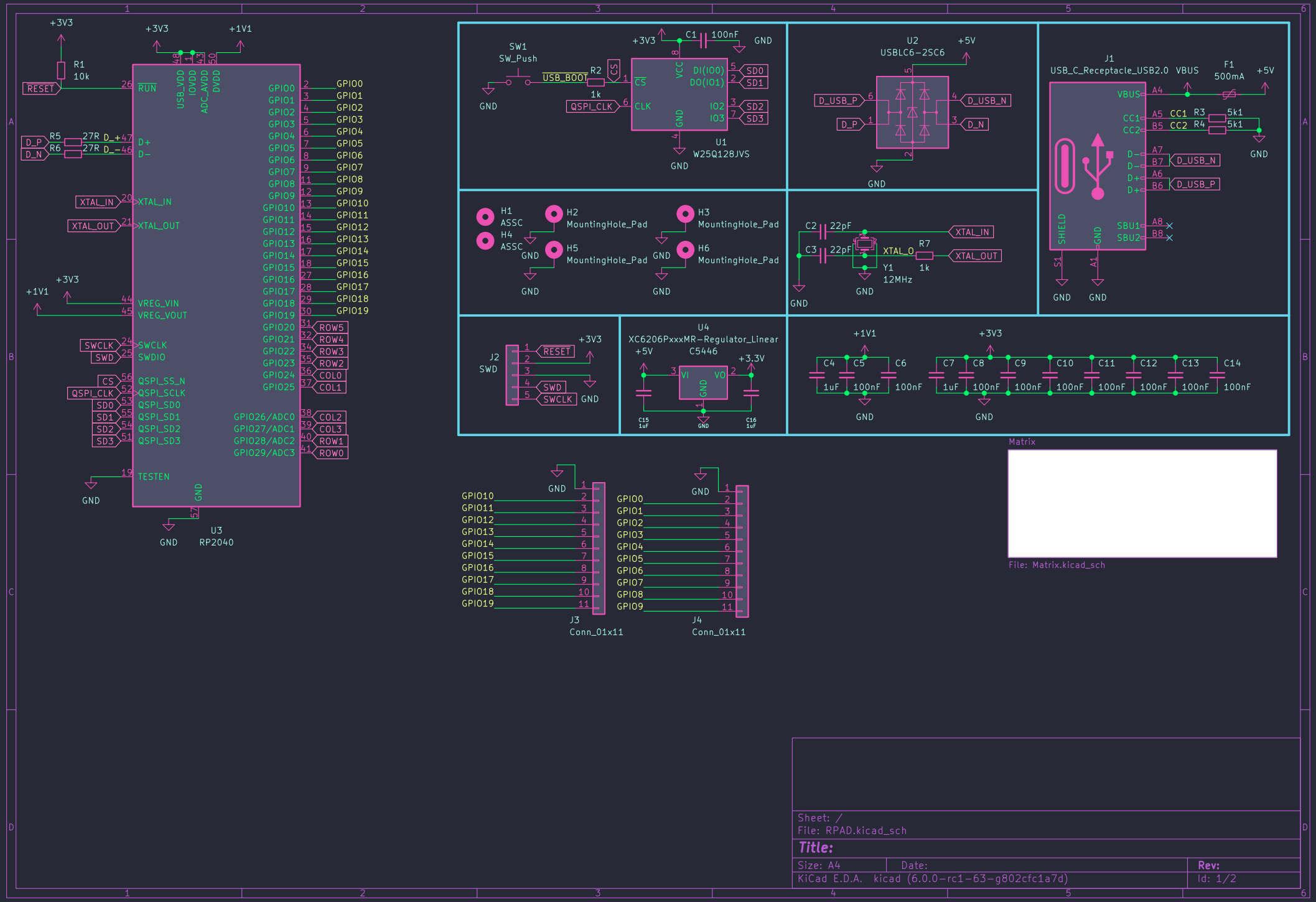

Sheet: /
File: RPAD.kicad_sch

Title:

Size: A4	Date:	Rev:
KiCad E.D.A. kicad (6.0.0-rc1-63-g802cfc1a7d)		Id: 1/2

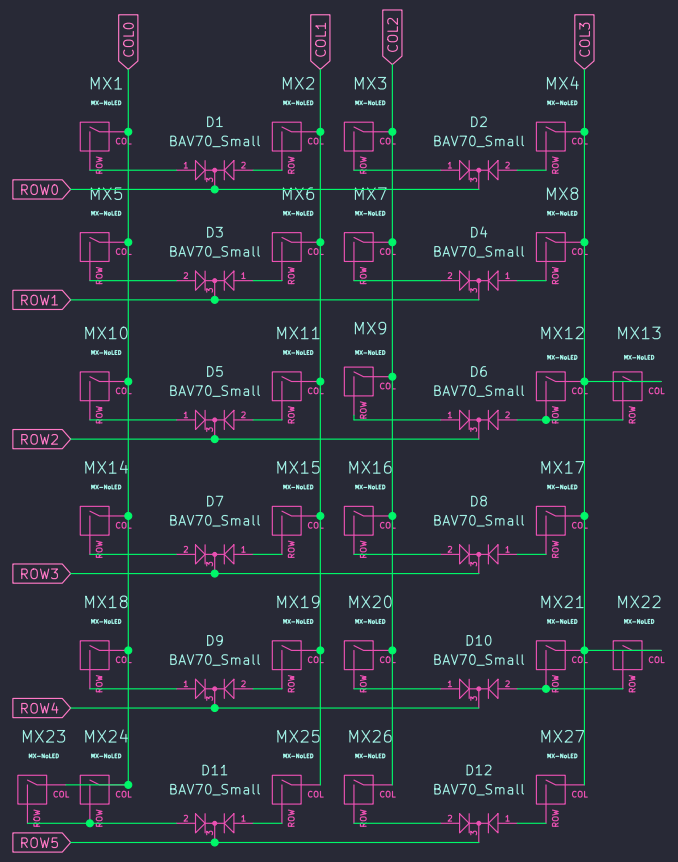

Sheet: /Matrix/
File: Matrix.kicad_sch

Title:

Size: A4	Date:	Rev:
KiCad E.D.A. kicad (6.0.0-rc1-63-g802cfc1a7d)		Id: 2/2