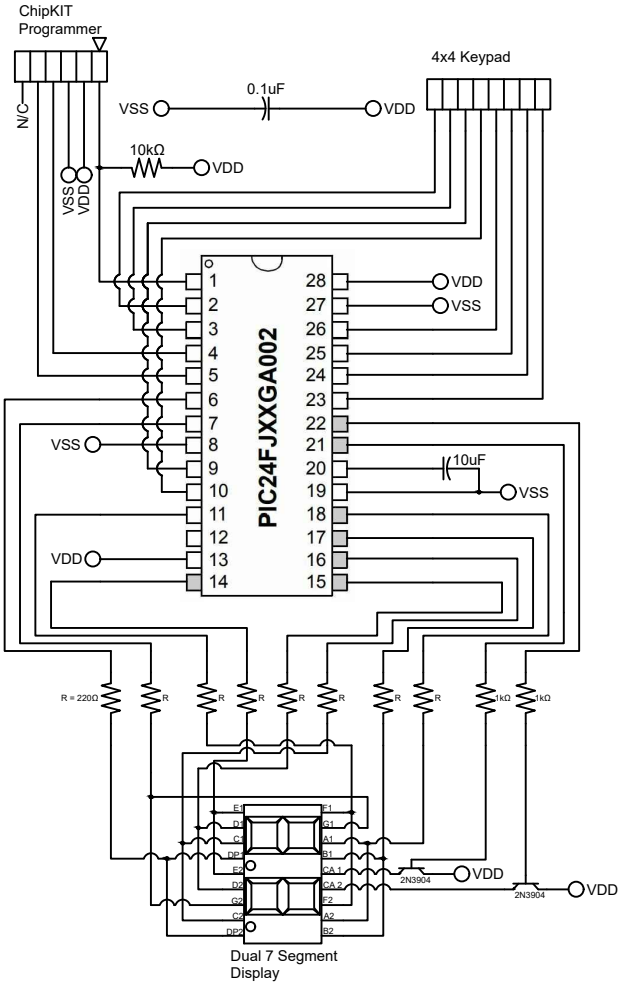

VERSIONS

NO.	DATE	MODIFICATION	CHECKED
1	03/27/2021	New drawing	Yes

PROJECT:

Dual 7 Segment
Display with Keypad

DRAWN BY: FJSS

SCALE: N/A