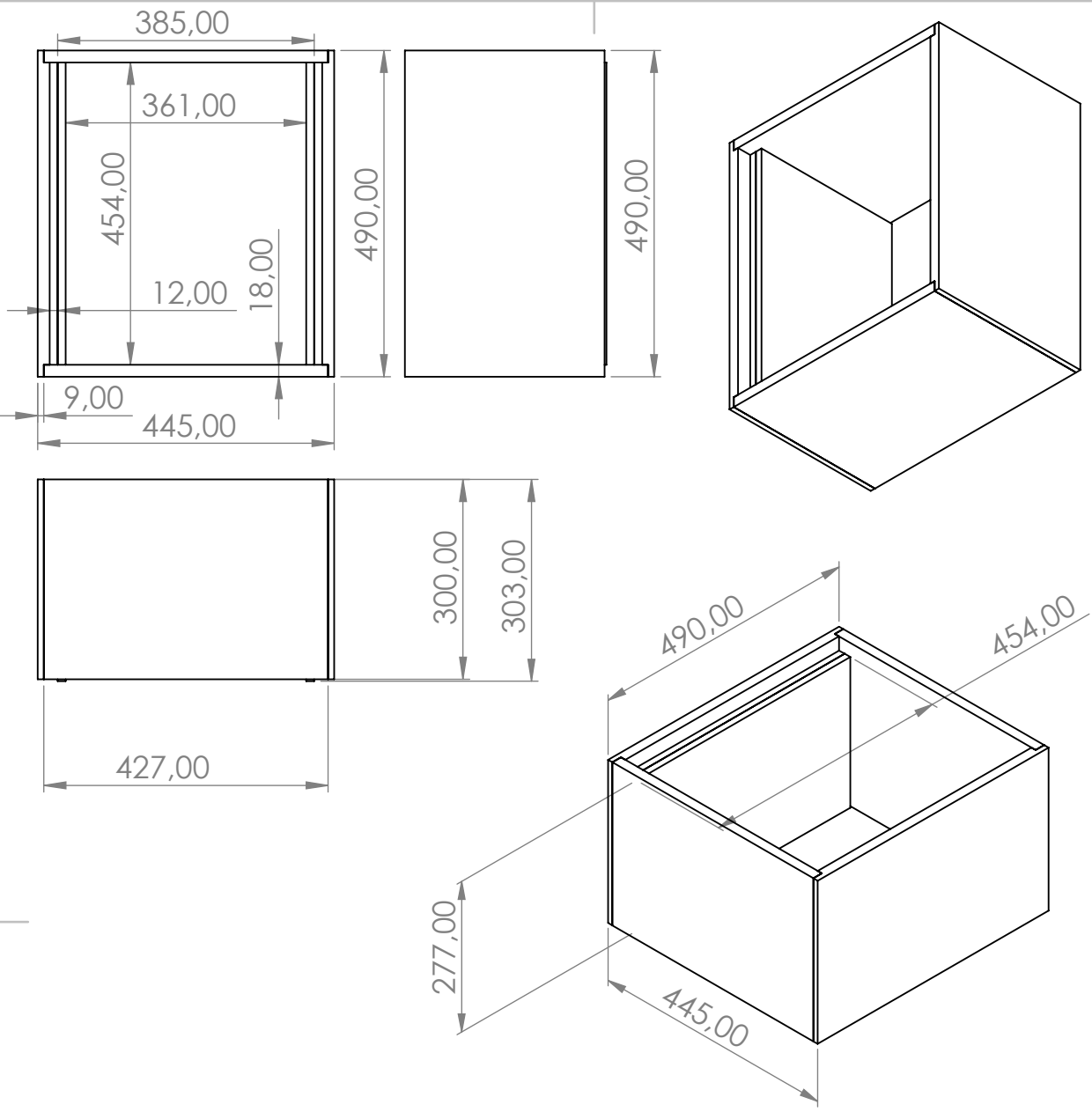

NR.	PART NUMBER	DESCRIPTION	QTY.
1	Lange buitenzijde 18mm dikte	Afm. (LBH) 490x300x18	2
2	Korte buitenzijde 18mm dikte	Afm. (LBH) 427x300x18	2
3	Balkjes 12mm dikte	Afm. (LBH) 454x12x12	4
4	Lange binnenzijde 12mm dikte	Afm. (LBH) 454x277x12	2

UNLESS OTHERWISE SPECIFIED:
DIMENSIONS ARE IN MILLIMETERS
SURFACE FINISH:
TOLERANCES:
LINEAR:
ANGULAR:

FINISH:

DEBURR AND BREAK SHARP EDGES

DO NOT SCALE DRAWING

REVISION

	NAME	SIGNATURE	DATE
DRAWN			
CHK'D			
APPV'D			
MFG			
Q.A			

TITLE:

Kast Technisch plan + afmetingen

MATERIAL:

DWG NO.

A4

WEIGHT:

SCALE:1:10

SHEET 1 OF 1

SOLIDWORKS Educational Product. For Instructional Use Only.