Transport Layer

Anand Baswade

anand@iitbhilai.ac.in

Simplified FSM for sender site

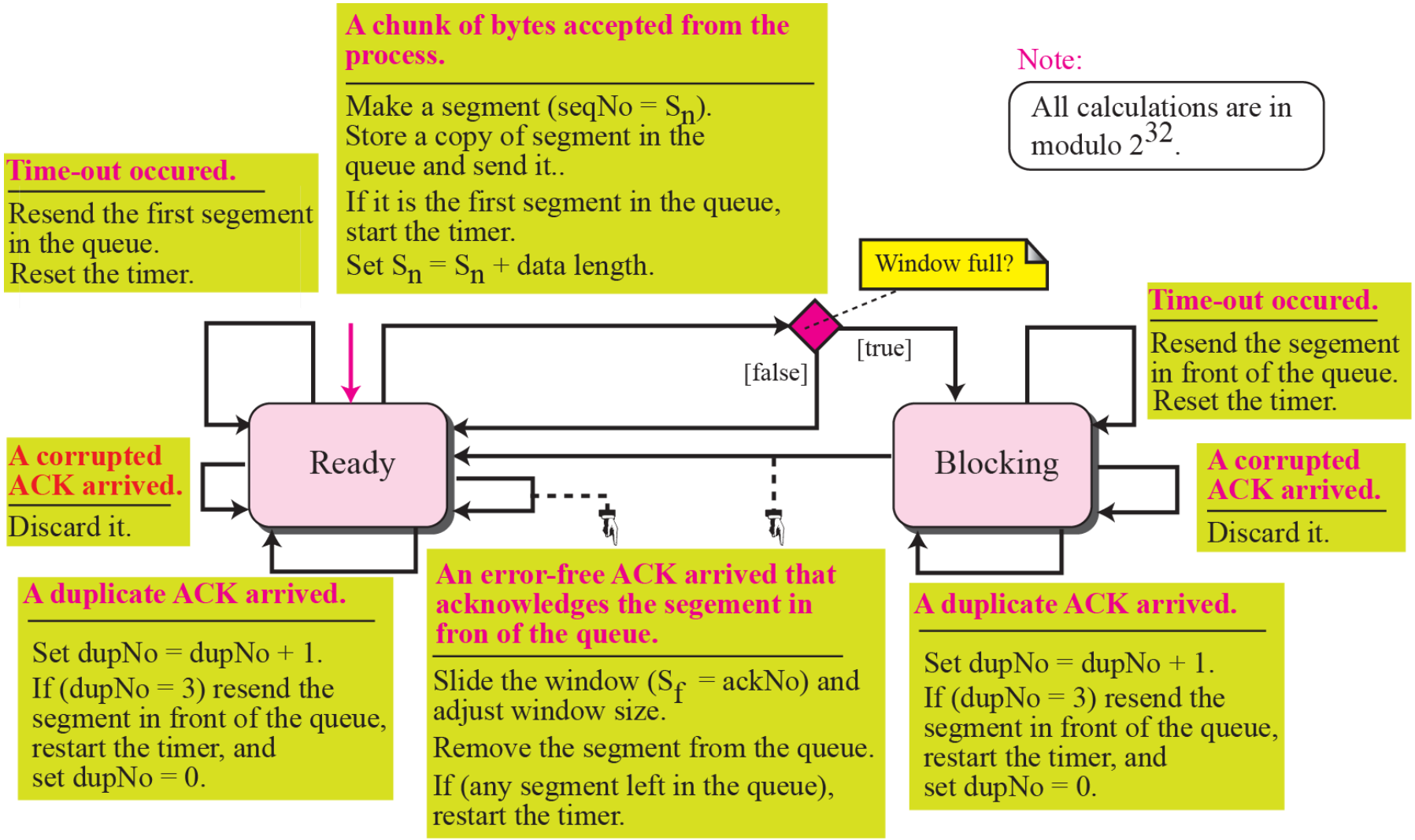

Simplified FSM for the receiver site

Note:

All calculations are in modulo 2^{32}.

An expected error-free segment arrived.

Buffer the message.

$R_n = R_n$ + data length.

If the ACK-delaying timer is running, stop the timer and send a cummulative ACK. Else, start the ACK-delaying timer.

A request for delivery of k bytes of data from process came

Deliver the data.

Slide the window and adjust window size.

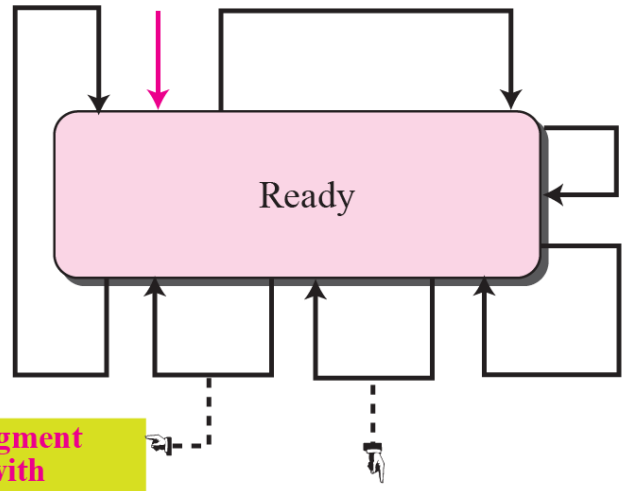

ACK-delaying timer expired.

Send the delayed ACK.

An error-free, but out-of order segment arrived

Store the segment if not duplicate.

Send an ACK with ackNo equal to the sequence number of expected segment (duplicate ACK).

An error-free duplicate segment or an error-free segment with sequence number ouside window arrived

Discard the segment.

Send an ACK with ackNo equal to the sequence number of expected segment (duplicate ACK).

A corrupted segment arrived

Discard the segment.

TCP round trip time, timeout

Q: how to set TCP timeout value?

- longer than RTT, but RTT varies!
- *too short:* premature timeout, unnecessary retransmissions
- *too long:* slow reaction to segment loss

Q: how to estimate RTT?

- `SampleRTT`: measured time from segment transmission until ACK receipt
  - ignore retransmissions
- `SampleRTT` will vary, want estimated RTT "smoother"
  - average several *recent* measurements, not just current `SampleRTT`