Network Layer

Anand Baswade
anand@iitbhilai.ac.in

Services provided at the source computer

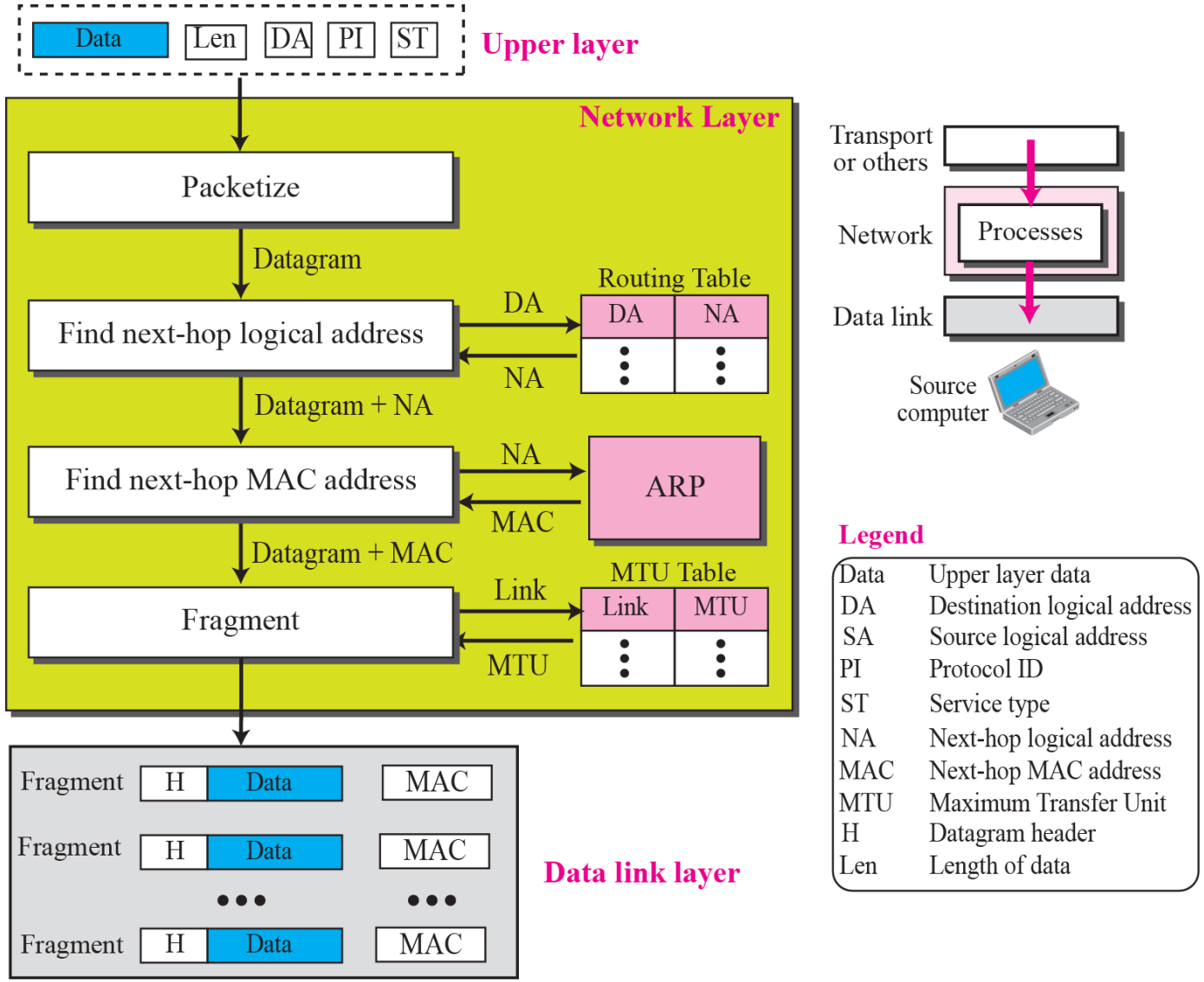

Processing at each router

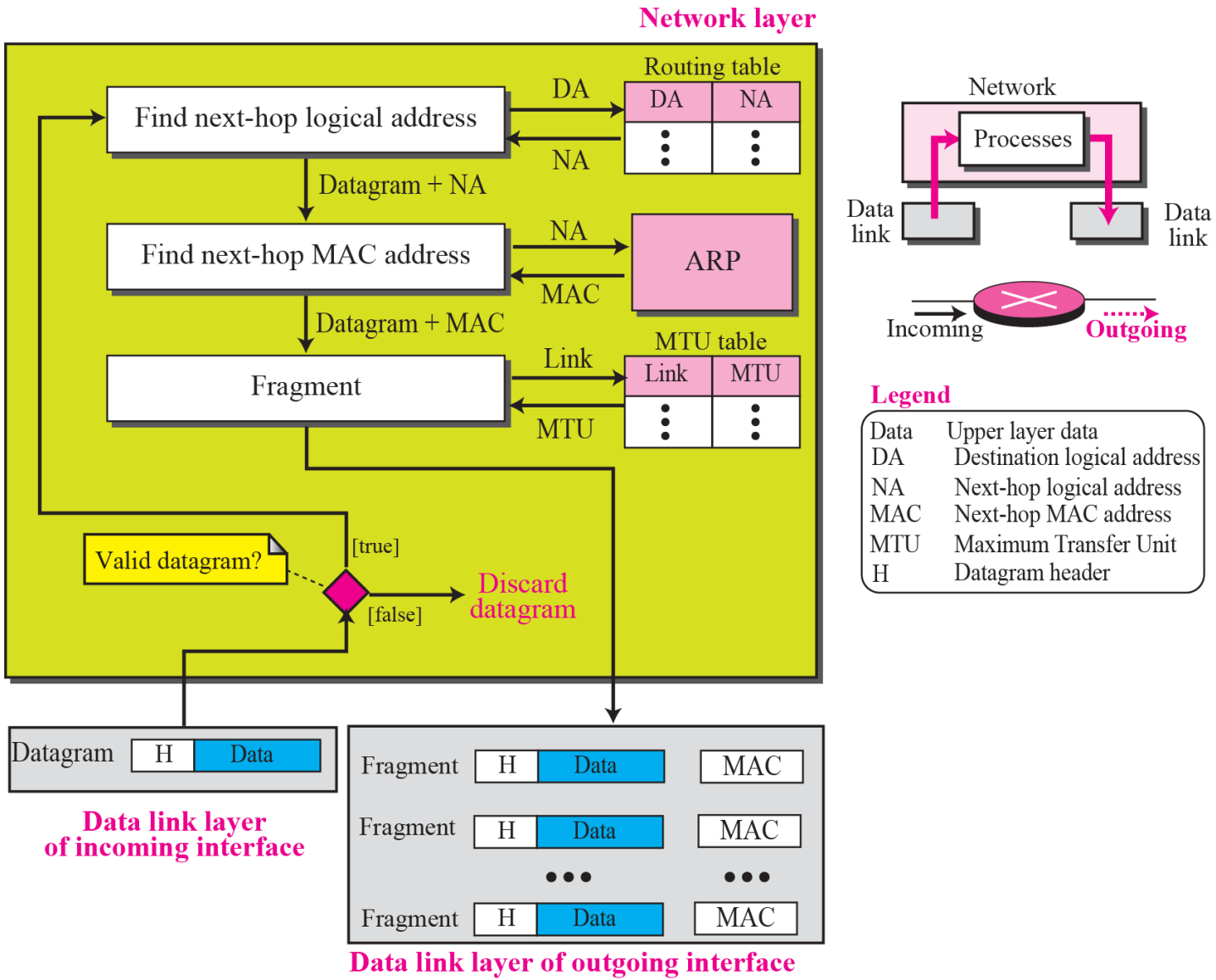

Processing at the destination computer

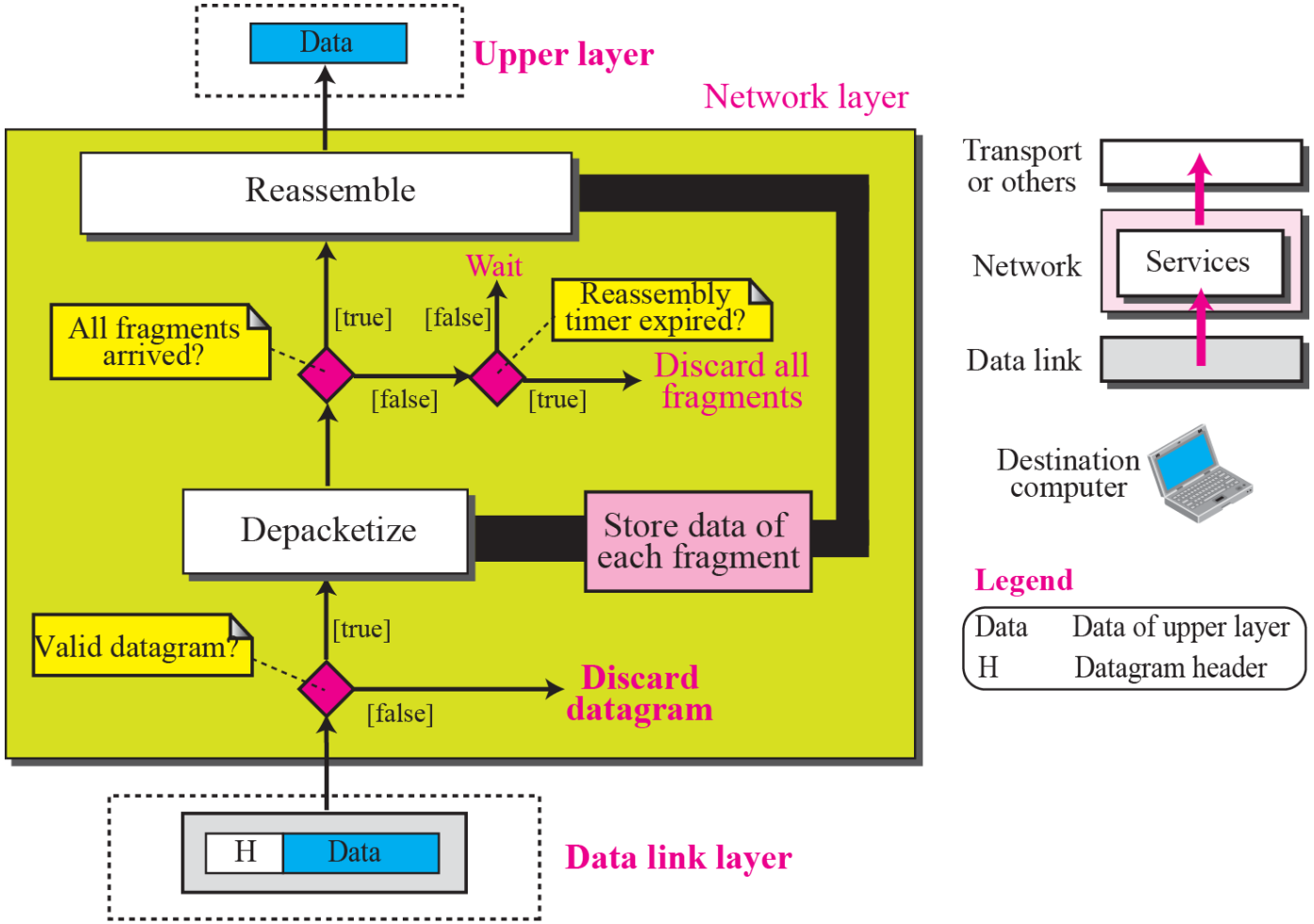

Two key network-layer functions

network-layer functions:

- *forwarding:* move packets from a router's input link to appropriate router output link
  - *routing:* determine route taken by packets from source to destination
    - *routing algorithms*

analogy: taking a trip

- *forwarding:* process of getting through single interchange
  - *routing:* process of planning trip from source to destination

forwarding

routing

Network Layer: Internet

host, router network layer functions:

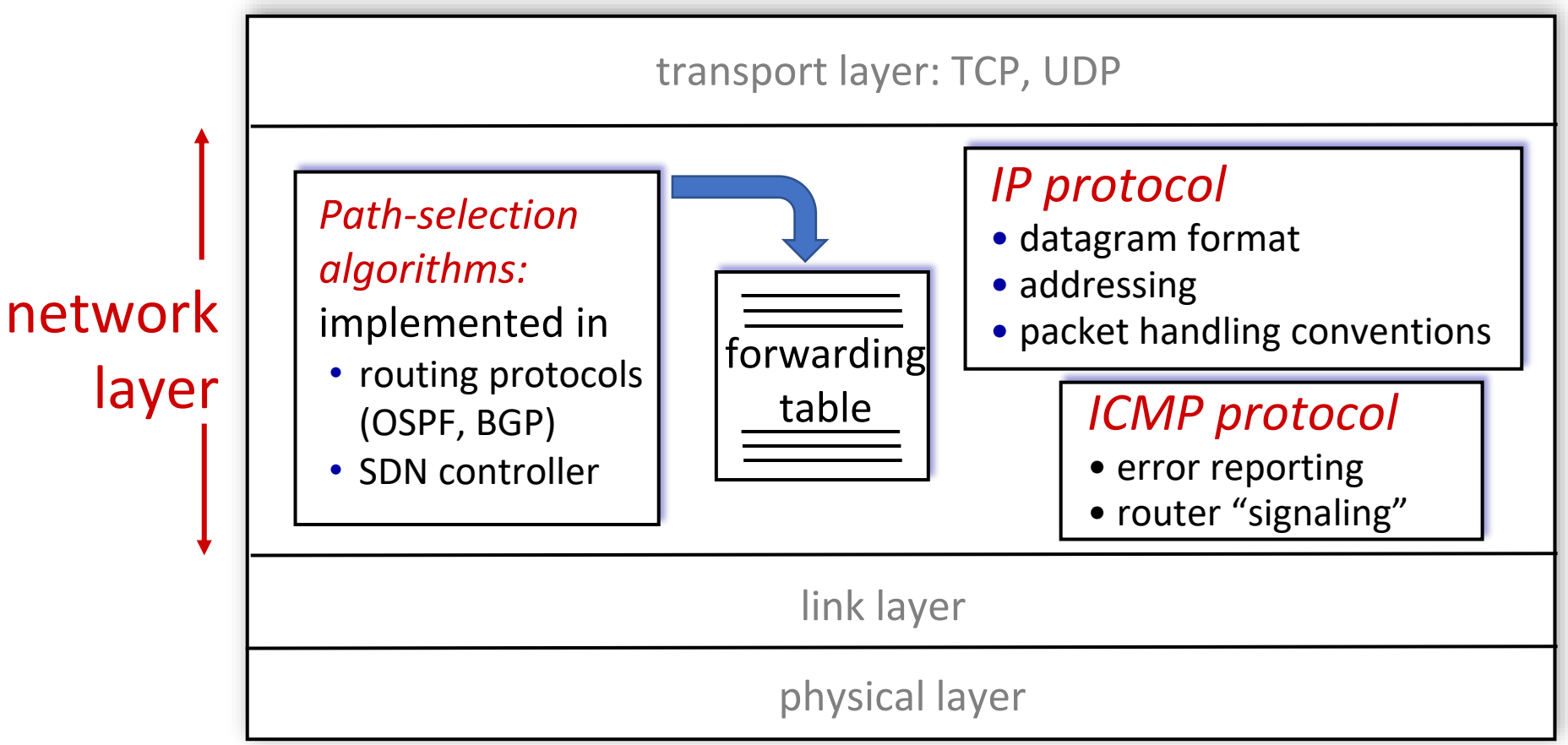

IP Header

Datagram: Header and Data

- **Packets in the network (internet) layer are called *datagrams*.**
- **A datagram is a variable-length packet consisting of two parts: header and data.**
- **The header is 20 to 60 bytes in length and contains information essential to routing and delivery.**

IP datagram

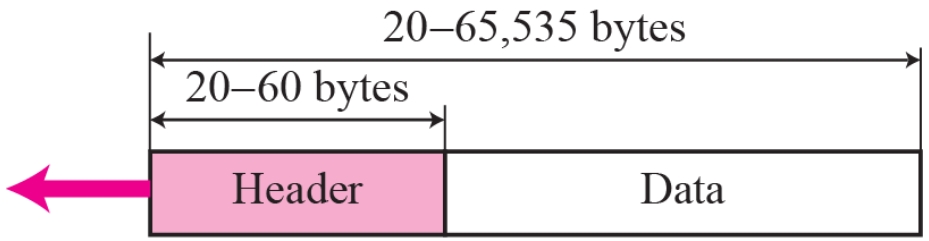

a. IP datagram

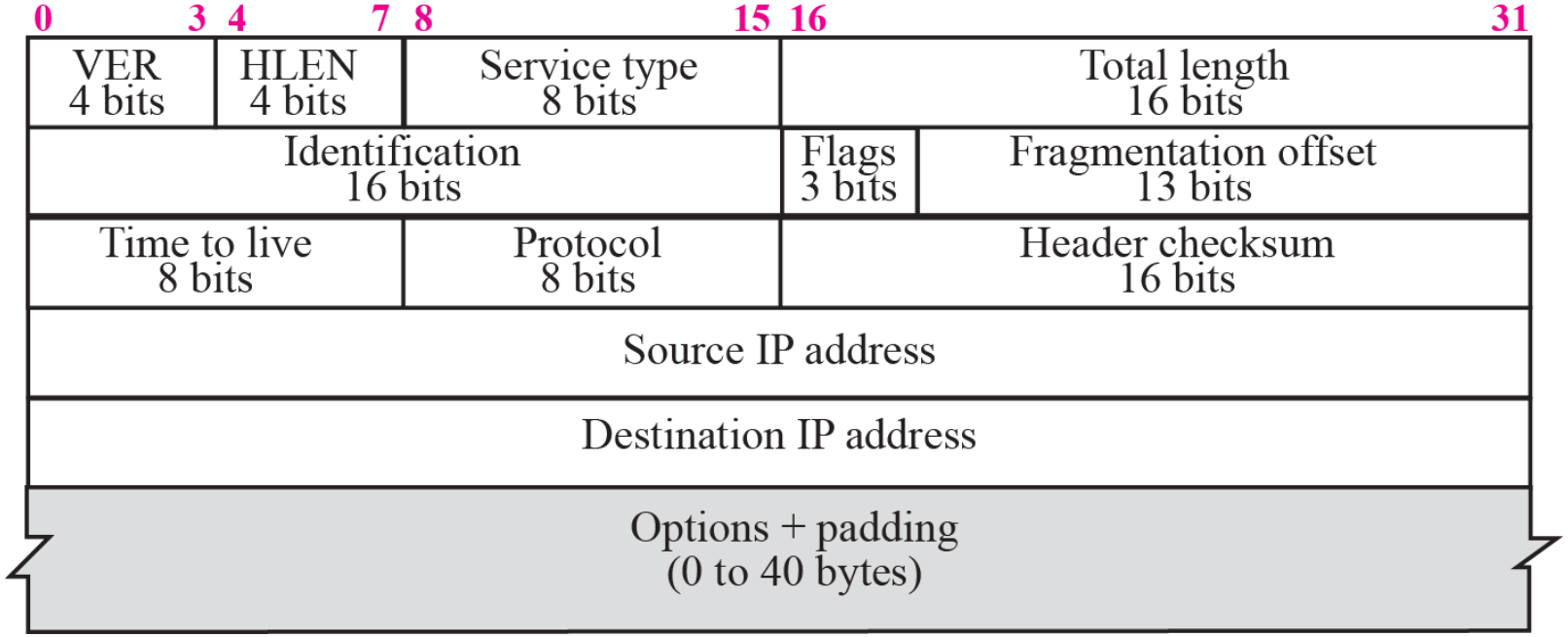

b. Header format

IP Datagram format

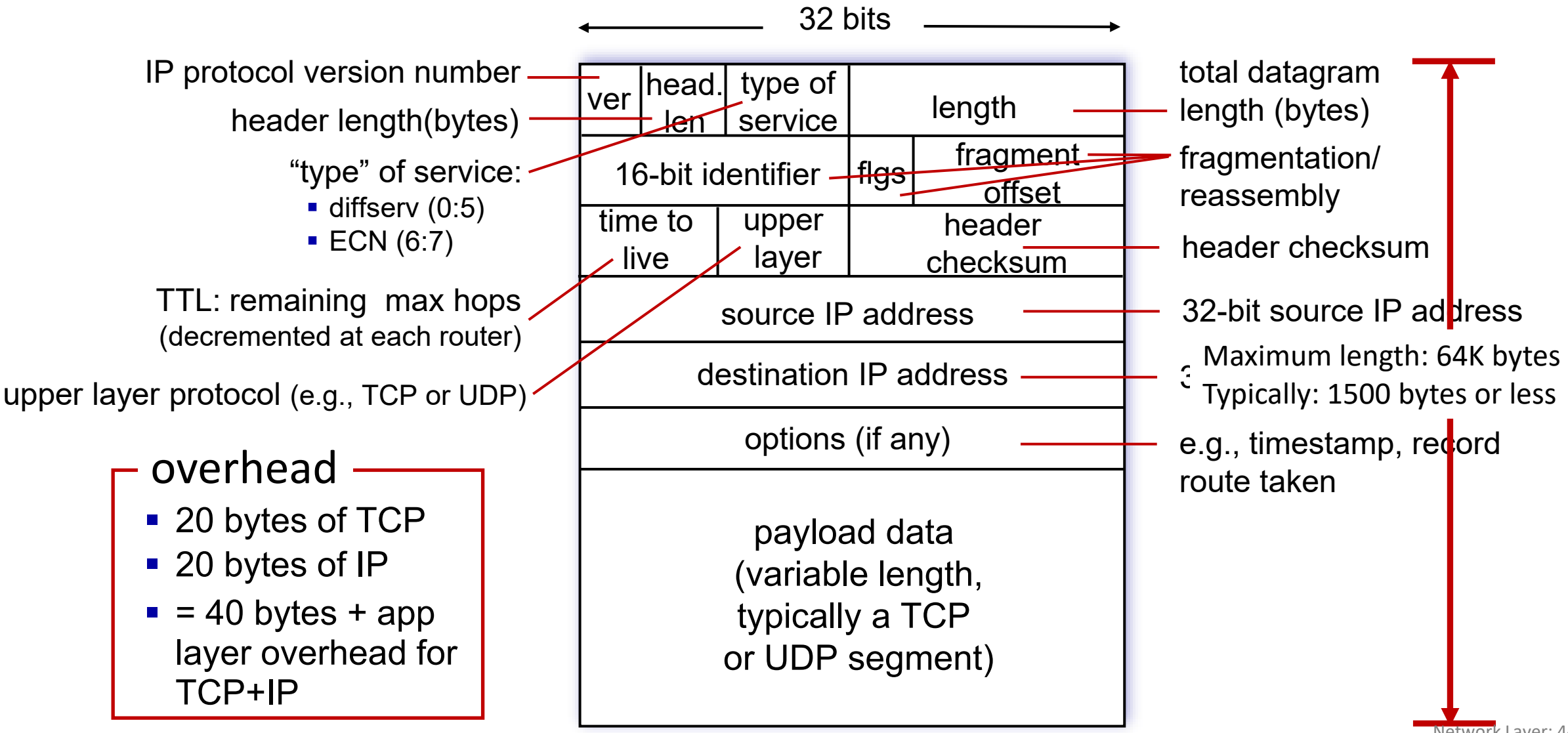

overhead

- 20 bytes of TCP
- 20 bytes of IP
- = 40 bytes + app layer overhead for TCP+IP

The total length field defines the total length of the datagram including the header.

Checksum in IP covers only the header, not the data.

Fragmentation at routers, reassembling at destination only.

Encapsulation of a small datagram in an Ethernet frame

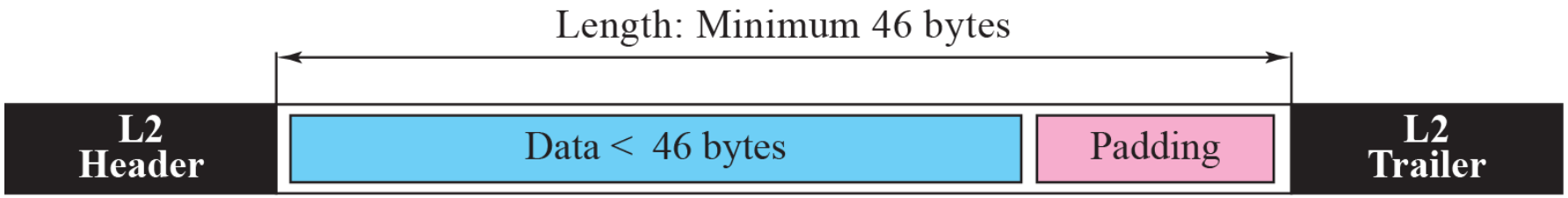

Multiplexing

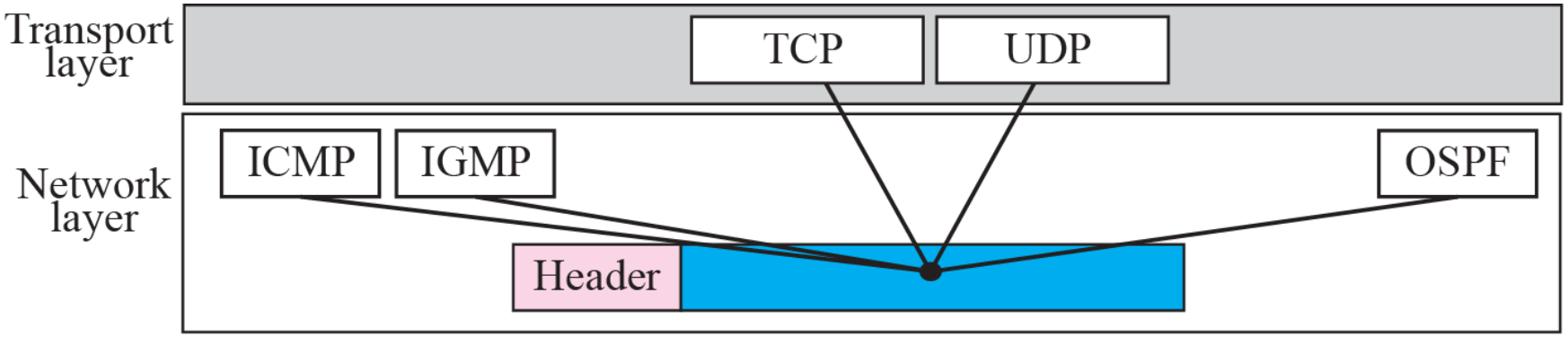

Table 7.2 *Protocols*

Value	*Protocol*	*Value*	*Protocol*
1	ICMP	17	UDP
2	IGMP	89	OSPF
6	TCP		

Example

An IP packet has arrived with the first 8 bits as shown:

01000010

The receiver discards the packet. Why?

Solution

There is an error in this packet. The 4 left-most bits (0100) show the version, which is correct. The next 4 bits (0010) show the wrong header length ($2 \times 4 = 8$). The minimum number of bytes in the header must be 20. The packet has been corrupted in transmission.

Example

In an IP packet, the value of HLEN is 1000 in binary. How many bytes of options are being carried by this packet?

Solution

The HLEN value is 8, which means the total number of bytes in the header is 8 × 4 or 32 bytes. The first 20 bytes are the base header, the next 12 bytes are the options.

Example

In an IP packet, the value of HLEN is 5_{16} and the value of the total length field is 0028_{16}. How many bytes of data are being carried by this packet?

Solution

The HLEN value is 5, which means the total number of bytes in the header is 5×4 or 20 bytes (no options). The total length is 40 bytes, which means the packet is carrying 20 bytes of data (40 − 20).

Example

An IP packet has arrived with the first few hexadecimal digits as shown below:

4500002800010000 0102 . . .

How many hops can this packet travel before being dropped? The data belong to what upper layer protocol?

Solution

To find the time-to-live field, we skip 8 bytes (16 hexadecimal digits). The time-to-live field is the ninth byte, which is 01. This means the packet can travel only one hop. The protocol field is the next byte (02), which means that the upper layer protocol is IGMP.

Fragmentation

- **A datagram can travel through different networks. Each router decapsulates the IP datagram from the frame it receives, processes it, and then encapsulates it in another frame.**
- **The format and size of the received frame depend on the protocol used by the physical network through which the frame has just traveled.**
- **The format and size of the sent frame depend on the protocol used by the physical network through which the frame is going to travel.**

✓ **Maximum Transfer Unit (MTU)**

✓ **Fields Related to Fragmentation**

MTU

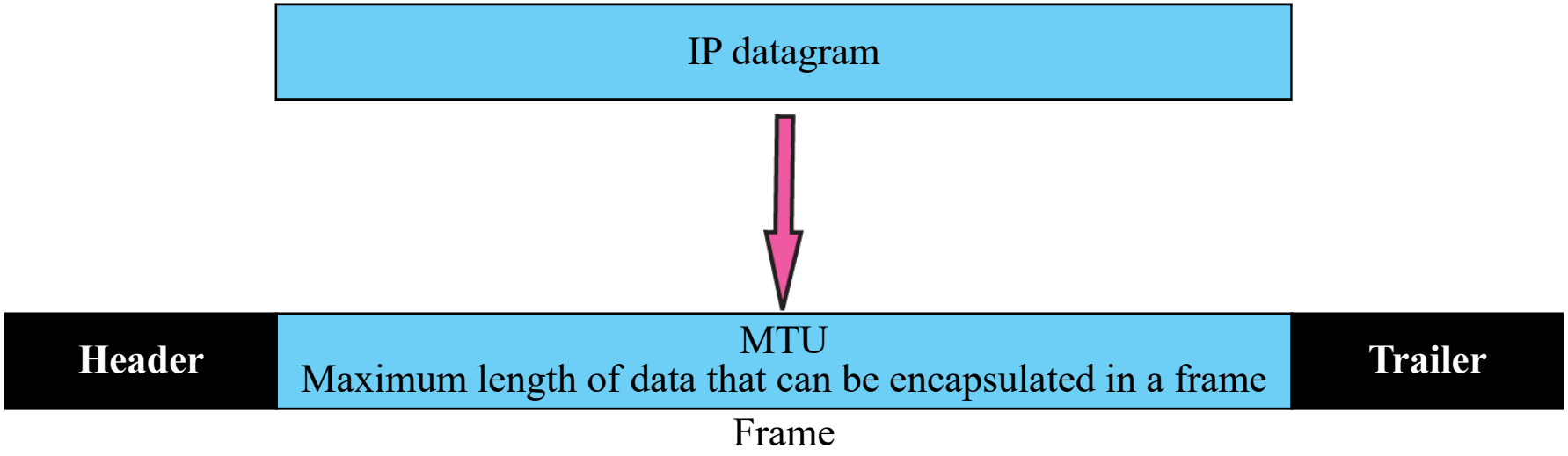
IP datagram
Header
MTU
Maximum length of data that can be encapsulated in a frame
Trailer
Frame

Flags field

D: Do not fragment
M: More fragments

Fragmentation example

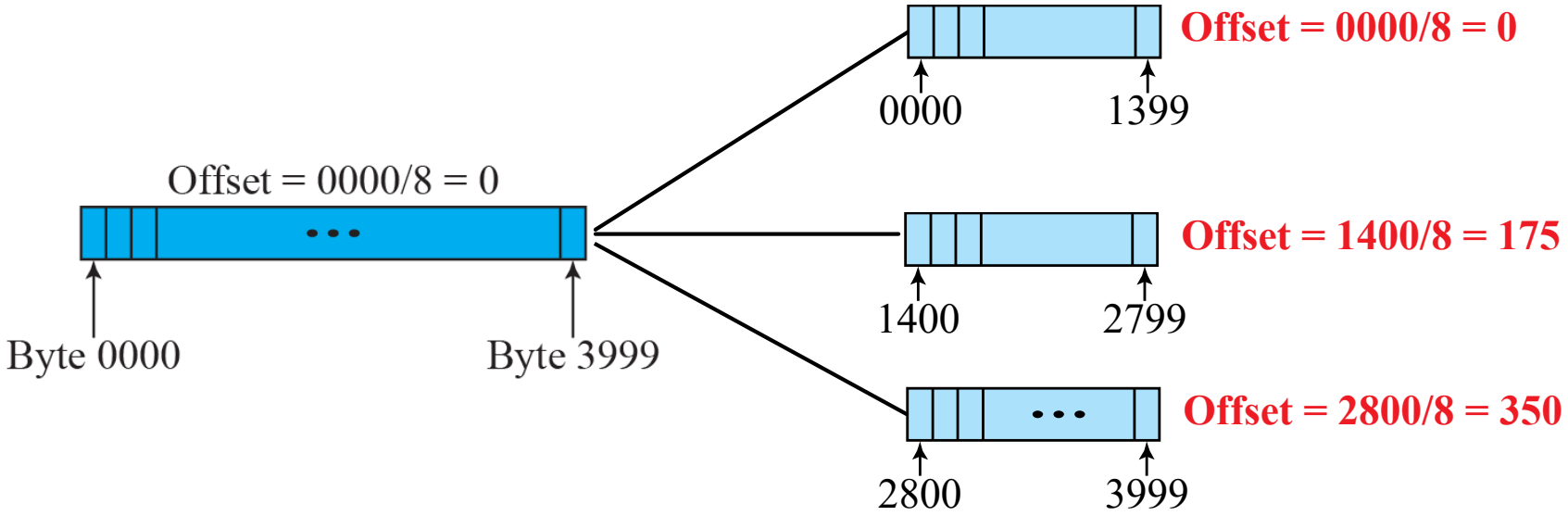

Detailed fragmentation example

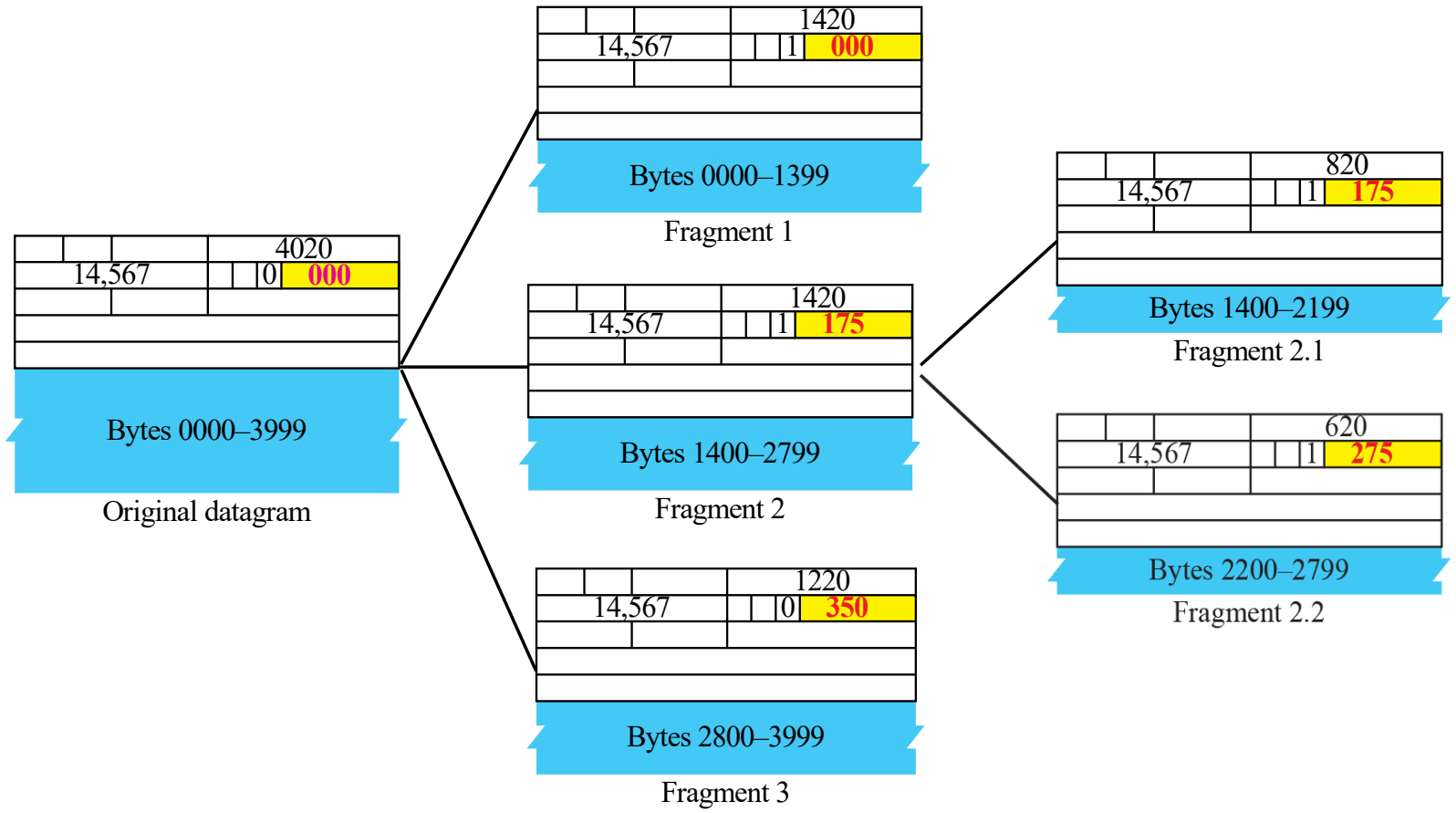

Example

A packet has arrived with an M bit value of 0. Is this the first fragment, the last fragment, or a middle fragment? Do we know if the packet was fragmented?

Solution

If the M bit is 0, it means that there are no more fragments; the fragment is the last one. However, we cannot say if the original packet was fragmented or not. A nonfragmented packet is considered the last fragment.

Example

A packet has arrived with an M bit value of 1. Is this the first fragment, the last fragment, or a middle fragment? Do we know if the packet was fragmented?

Solution

If the M bit is 1, it means that there is at least one more fragment. This fragment can be the first one or a middle one, but not the last one. We don't know if it is the first one or a middle one; we need more information (the value of the fragmentation offset). See also the next example.

Example

A packet has arrived with an M bit value of 1 and a fragmentation offset value of zero. Is this the first fragment, the last fragment, or a middle fragment?

Solution

Because the M bit is 1, it is either the first fragment or a middle one. Because the offset value is 0, it is the first fragment.

Example

A packet has arrived in which the offset value is 100. What is the number of the first byte? Do we know the number of the last byte?

Solution

To find the number of the first byte, we multiply the offset value by 8. This means that the first byte number is 800. We cannot determine the number of the last byte unless we know the length of the data.

Example

A packet has arrived in which the offset value is 100, the value of HLEN is 5 and the value of the total length field is 100. What is the number of the first byte and the last byte?

Solution

The first byte number is 100 × 8 = 800. The total length is 100 bytes and the header length is 20 bytes (5 × 4), which means that there are 80 bytes in this datagram. If the first byte number is 800, the last byte number must be 879.

Checksum

- Sender Side: The header is divided into 16-bit sections. All the sections are added and the sum is complemented. The result is inserted in the checksum field.

4, 5, and 0 →	01000101	00000000
28 →	00000000	00011100
1 →	00000000	00000001
0 and 0 →	00000000	00000000
4 and 17 →	00000100	00010001
0 →	00000000	00000000
10.12 →	00001010	00001100
14.5 →	00001110	00000101
12.6 →	00001100	00000110
7.9 →	00000111	00001001
Sum →	**01110100**	**01001110**
Checksum →	**10001011**	**10110001**

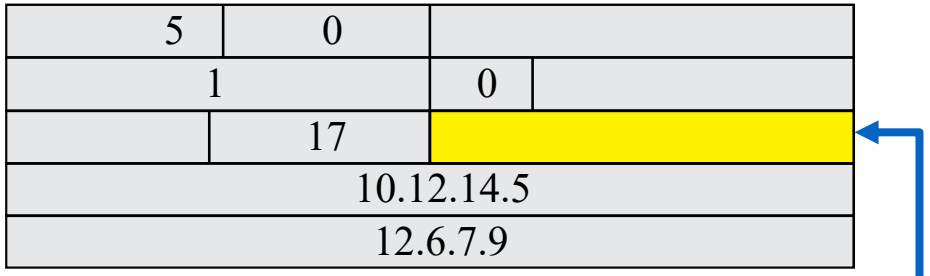

- Receiver Side: Figure shows the checking of checksum calculation at the receiver site (or intermediate router) assuming that no errors occurred in the header. The header is divided into 16-bit sections. All the sections are added and the sum is complemented. Since the result is 16 0s, the packet is accepted.

4	5	0	28	
1			0	0
4		17	**35761**	
10.12.14.5				
12.6.7.9				

4, 5, and 0 →	01000101	00000000
28 →	00000000	00011100
1 →	00000000	00000001
0 and 0 →	00000000	00000000
4 and 17 →	00000100	00010001
Checksum →	**10001011**	**10110001**
10.12 →	00001010	00001100
14.5 →	00001110	00000101
12.6 →	00001100	00000110
7.9 →	00000111	00001001
Sum →	**1111 1111**	**1111 1111**
Checksum →	**0000 0000**	**0000 0000**