Network Layer

Anand Baswade
anand@iitbhilai.ac.in

IPv4 Addresses

Introduction

- The identifier used in the IP layer of the TCP/IP protocol suite to identify each device connected to the Internet is called the Internet address or IP address.
- An IPv4 address is a 32-bit address that uniquely and universally defines the connection of a host or a router to the Internet; an IP address is the address of the interface.
- *The address space of IPv4 is 2^{32} or 4,294,967,296.*

Dotted-decimal notation

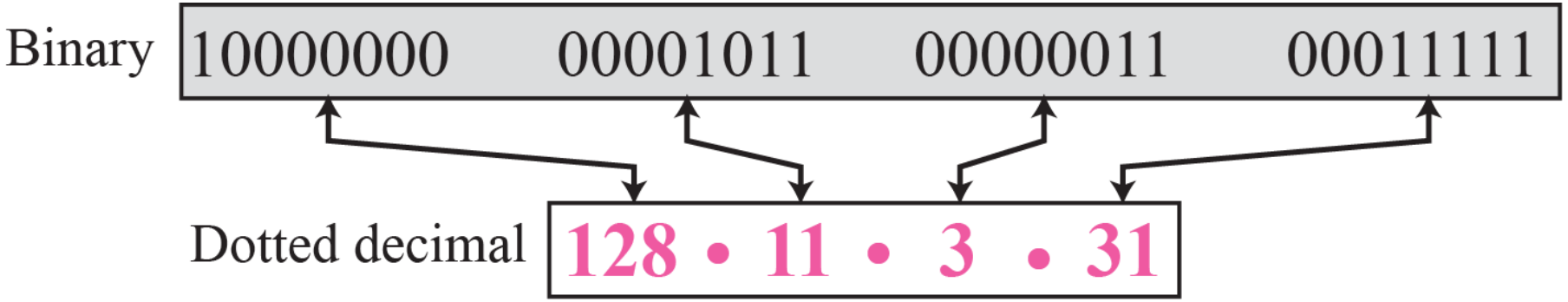

binary notation to dotted-decimal notation.

Classful Addressing

- IP addresses, when started a few decades ago, used the concept of classes.
- This architecture is called classful addressing. In the mid-1990s, a new architecture, called classless addressing, was introduced that supersedes the original architecture.
- In this section, we introduce classful addressing because it paves the way for understanding classless addressing and justifies the rationale for moving to the new architecture. Classless addressing is discussed in the next section.

Address space

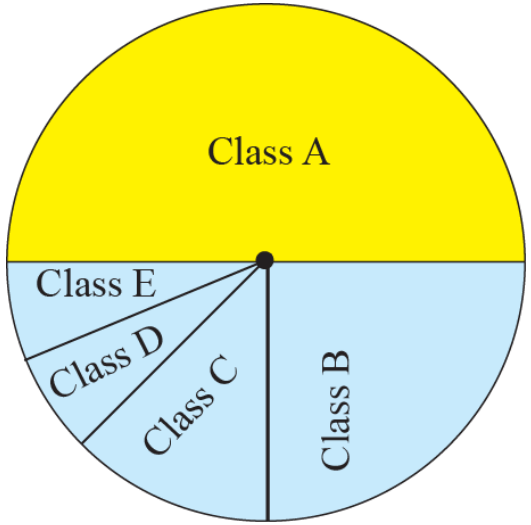

Class A: 2^{31} = 2,147,483,648 addresses, 50%

Class B: 2^{30} = 1,073,741,824 addresses, 25%

Class C: 2^{29} = 536,870,912 addresses, 12.5%

Class D: 2^{28} = 268,435,456 addresses, 6.25%

Class E: 2^{28} = 268,435,456 addresses, 6.25%

Finding the class of address

	Octet 1	Octet 2	Octet 3	Octet 4
Class A	0.....			
Class B	10.....			
Class C	110.....			
Class D	1110....			
Class E	1111....			

Binary notation

	Byte 1	Byte 2	Byte 3	Byte 4
Class A	0–127			
Class B	128–191			
Class C	192–223			
Class D	224–239			
Class E	240–255			

Dotted-decimal notation

Legend

Check next bit

Address class

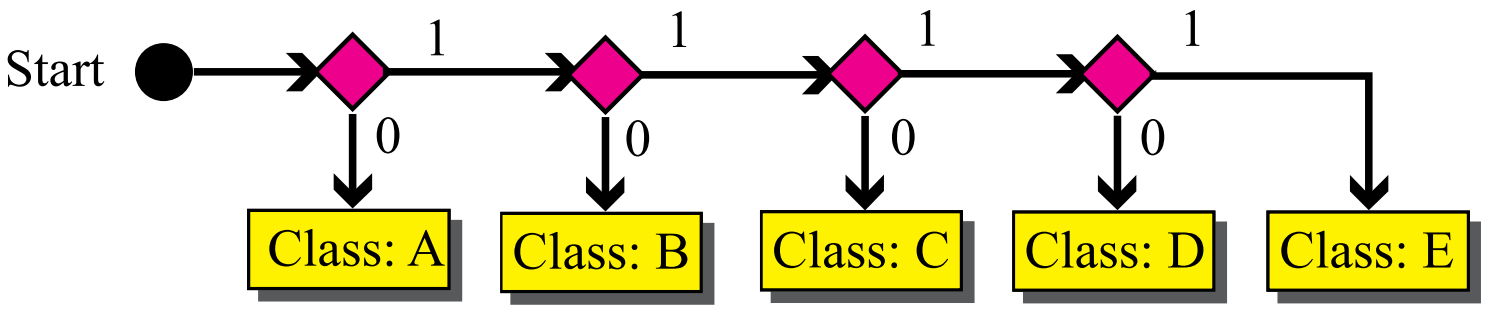

Example

Find the class of each address:

a. 00000001 00001011 00001011 11101111
b. 11000001 10000011 00011011 11111111
c. 10100111 11011011 10001011 01101111
d. 11110011 10011011 11111011 00001111

Solution

a. The first bit is 0. This is a class A address.
b. The first 2 bits are 1; the third bit is 0. This is a class C address.
c. The first bit is 1; the second bit is 0. This is a class B address.
d. The first 4 bits are 1s. This is a class E address.

Example

Find the class of each address:

a. 227.12.14.87

b. 193.14.56.22

c. 14.23.120.8

d. 252.5.15.111

Solution

a. The first byte is 227 (between 224 and 239); the class is D.

b. The first byte is 193 (between 192 and 223); the class is C.

c. The first byte is 14 (between 0 and 127); the class is A.

d. The first byte is 252 (between 240 and 255); the class is E.

Netid and hostid

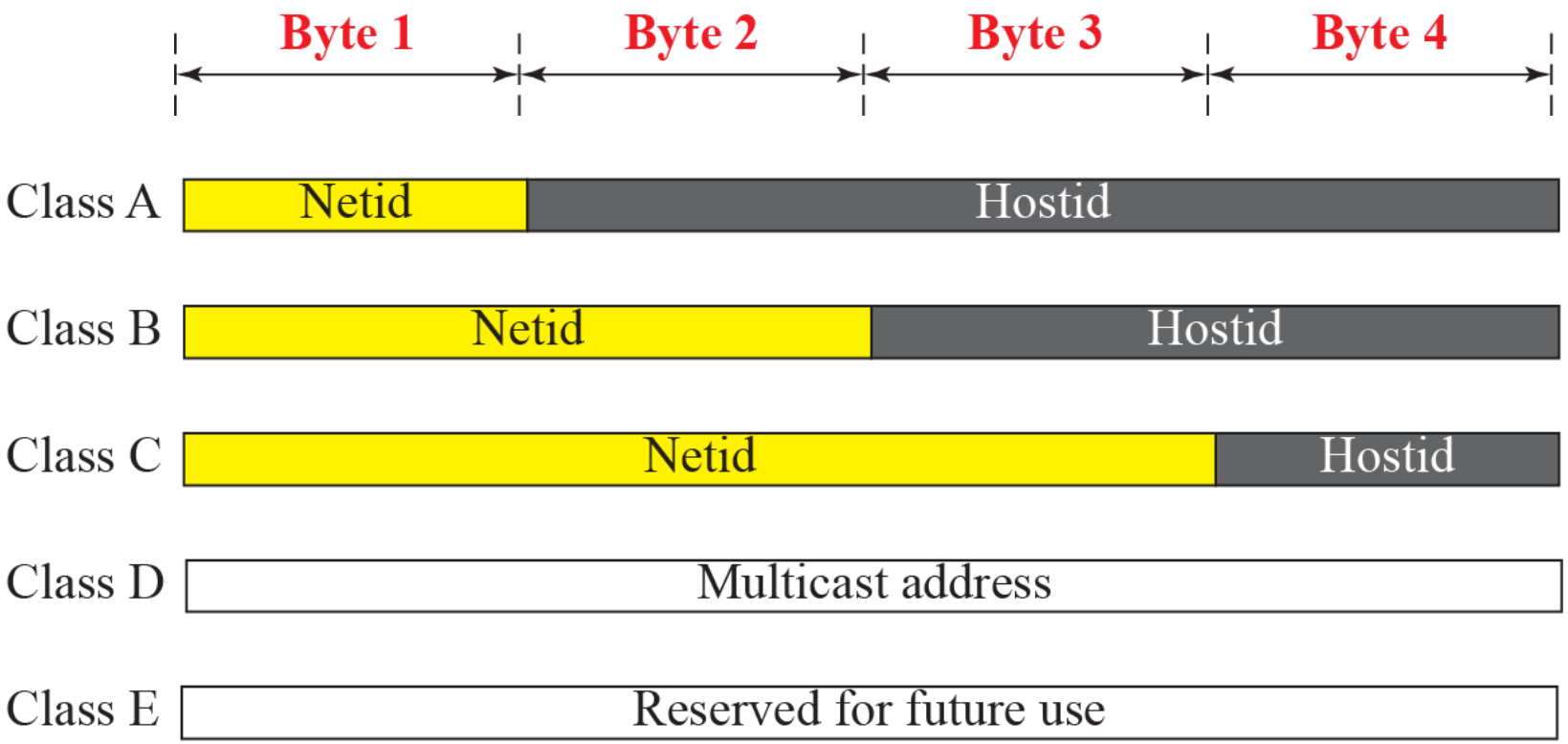

Blocks in Class A

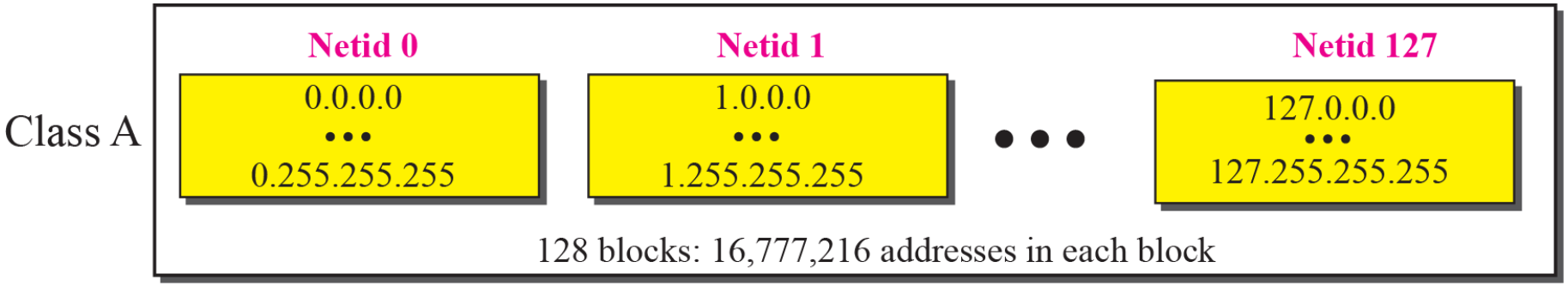

Millions of class A addresses are wasted.

Blocks in Class B

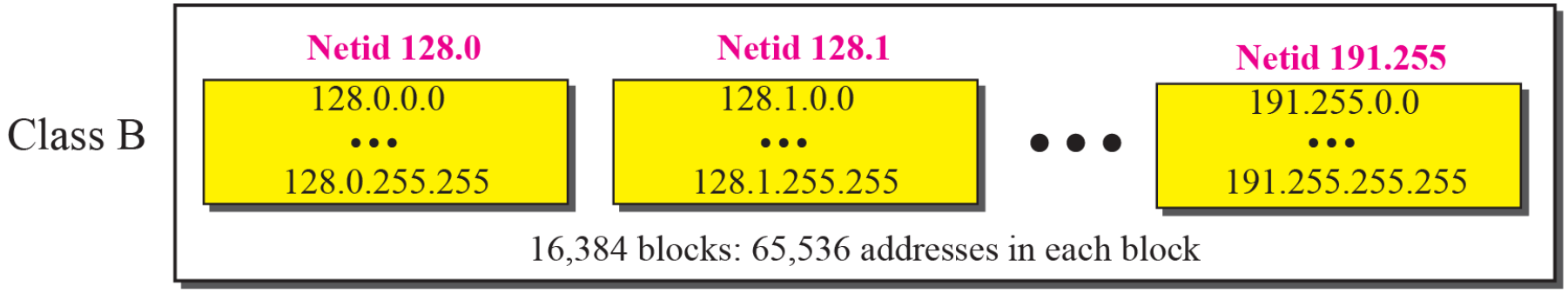

Many class B addresses are wasted.

Blocks in Class C

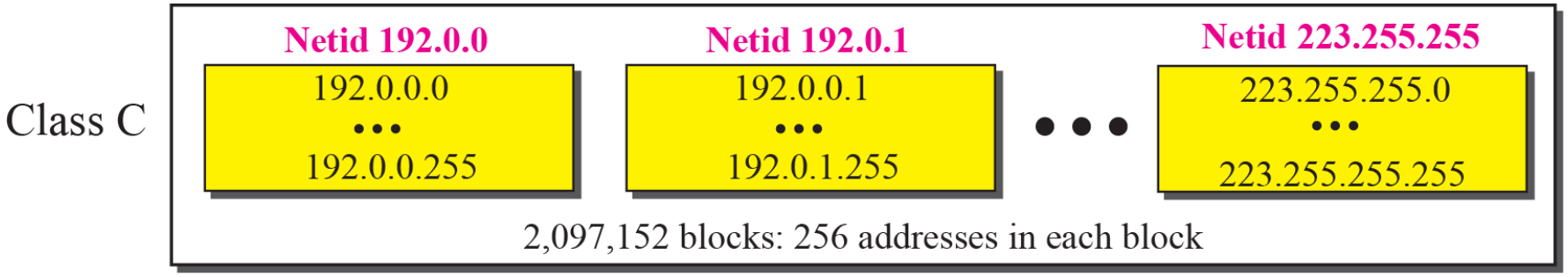

Not so many organizations are so small to have a class C block.

The single block in Class D

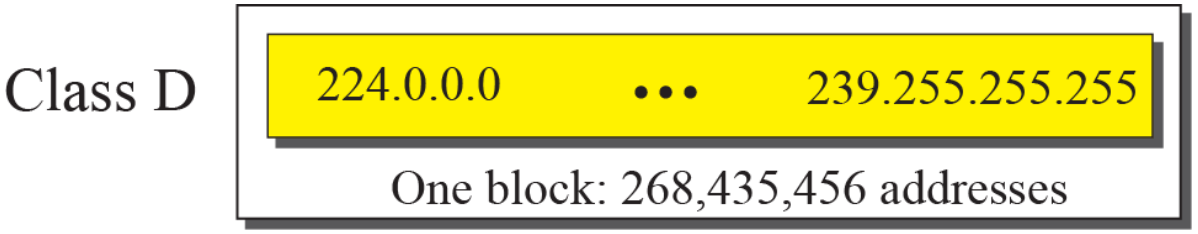

Class D addresses are made of one block, used for multicasting.

The single block in Class E

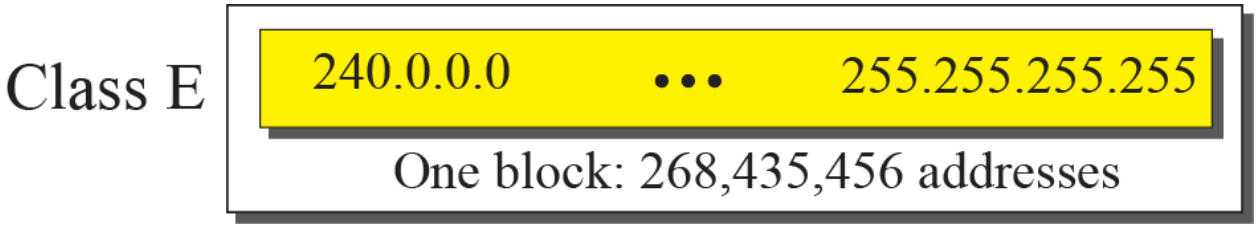

The only block of class E addresses was reserved for future purposes.

Point to Note

- *The range of addresses allocated to an organization in classful addressing was a block of addresses in Class A, B, or C.*
- *Two-level addressing in classful addressing*

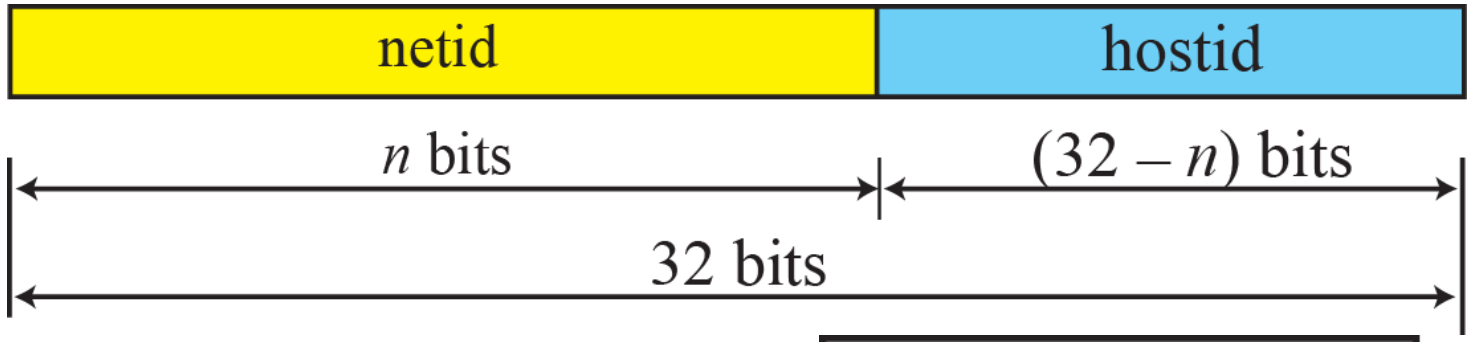

Class A: $n = 8$

Class B: $n = 16$

Class C: $n = 24$

Information extraction in classful addressing

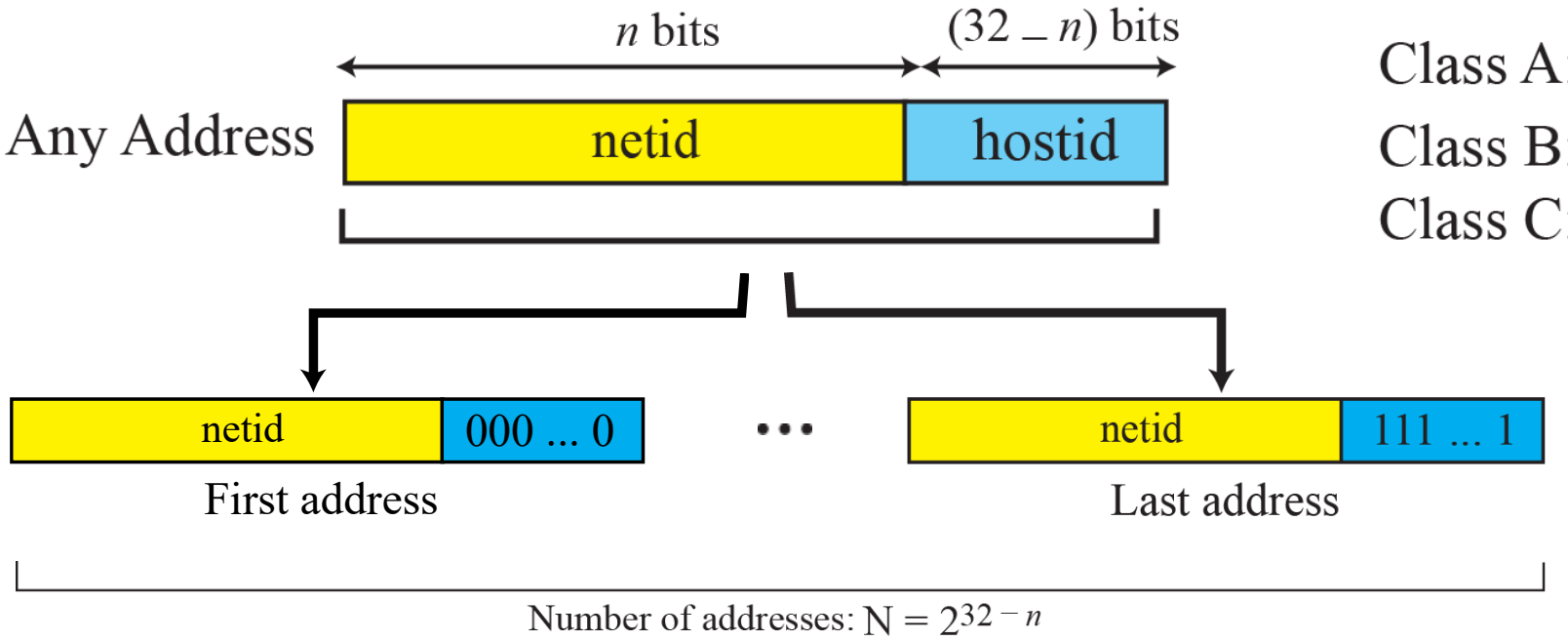

Class A: $n = 8$

Class B: $n = 16$

Class C: $n = 24$

Example

An address in a block is given as 73.22.17.25. Find the number of addresses in the block, the first address, and the last address.

Solution

Figure shows a possible configuration of the network that uses this block.

1. The number of addresses in this block is $N = 2^{32-n} =$ 16,777,216.

2. To find the first address, we keep the leftmost 8 bits and set the rightmost 24 bits all to 0s. The first address is 73.0.0.0/8, in which 8 is the value of *n*.

3. To find the last address, we keep the leftmost 8 bits and set the rightmost 24 bits all to 1s. The last address is 73.255.255.255.

Solution

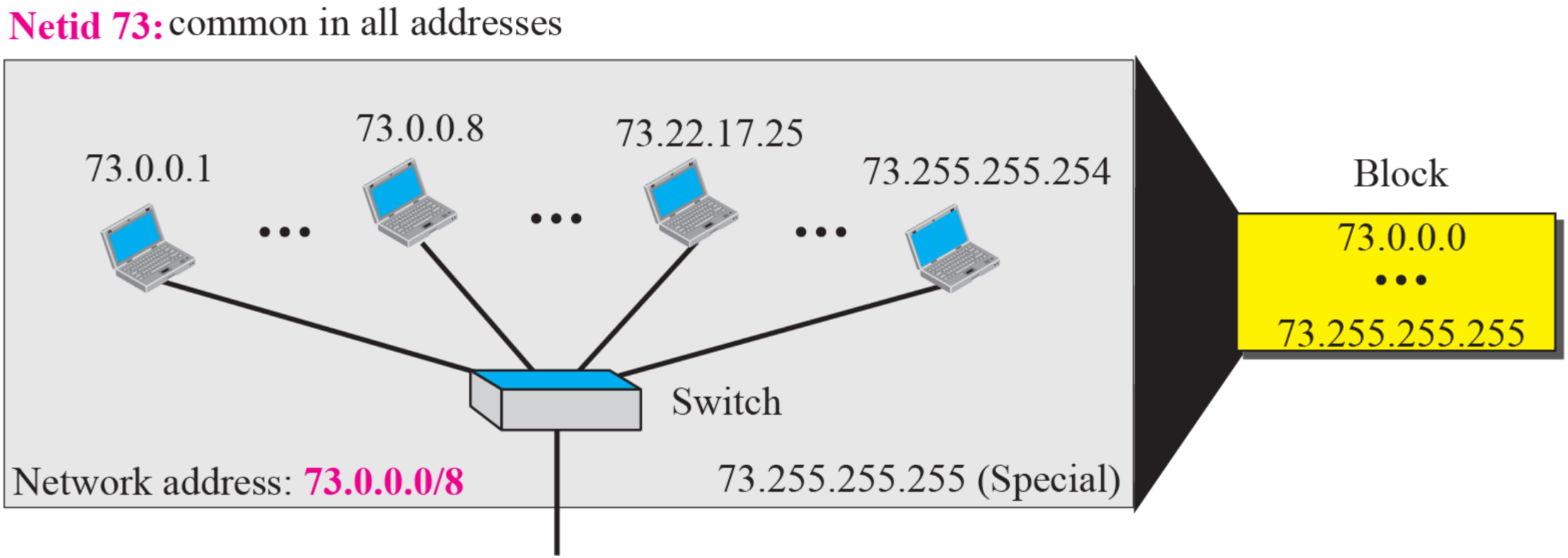
Netid 73: common in all addresses
73.0.0.1
73.0.0.8
73.22.17.25
73.255.255.254
Switch
Network address: 73.0.0.0/8
73.255.255.255 (Special)
Block
73.0.0.0
73.255.255.255

Example 2

An address in a block is given as 180.8.17.9. Find the number of addresses in the block, the first address, and the last address.

Solution

Figure shows a possible configuration of the network that uses this block.

1. The number of addresses in this block is $N = 2^{32-n} = 65{,}536$.
2. To find the first address, we keep the leftmost 16 bits and set the rightmost 16 bits all to 0s. The first address is 180.8.0.0/16, in which 16 is the value of *n*.
3. To find the last address, we keep the leftmost 16 bits and set the rightmost 16 bits all to 1s. The last address is 180.8.255.255.

Solution

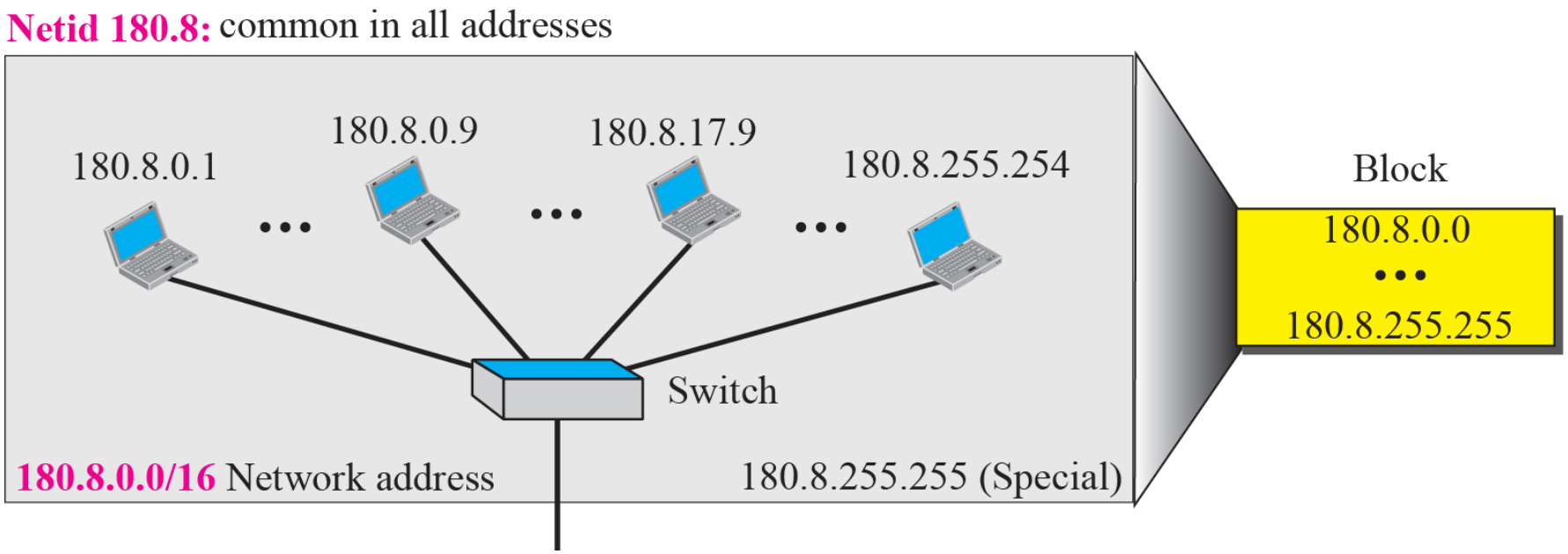
Netid 180.8: common in all addresses
180.8.0.1
180.8.0.9
180.8.17.9
180.8.255.254
Switch
180.8.0.0/16 Network address
180.8.255.255 (Special)
Block
180.8.0.0
180.8.255.255

Example 3

An address in a block is given as 200.11.8.45. Find the number of addresses in the block, the first address, and the last address.

Solution

Figure shows a possible configuration of the network that uses this block.

1. The number of addresses in this block is $N = 2^{32-n} = 256$.
2. To find the first address, we keep the leftmost 24 bits and set the rightmost 8 bits all to 0s. The first address is 200.11.8.0/16, in which 24 is the value of *n*.
3. To find the last address, we keep the leftmost 24 bits and set the rightmost 8 bits all to 1s. The last address is 200.11.8.255/16.

Solution

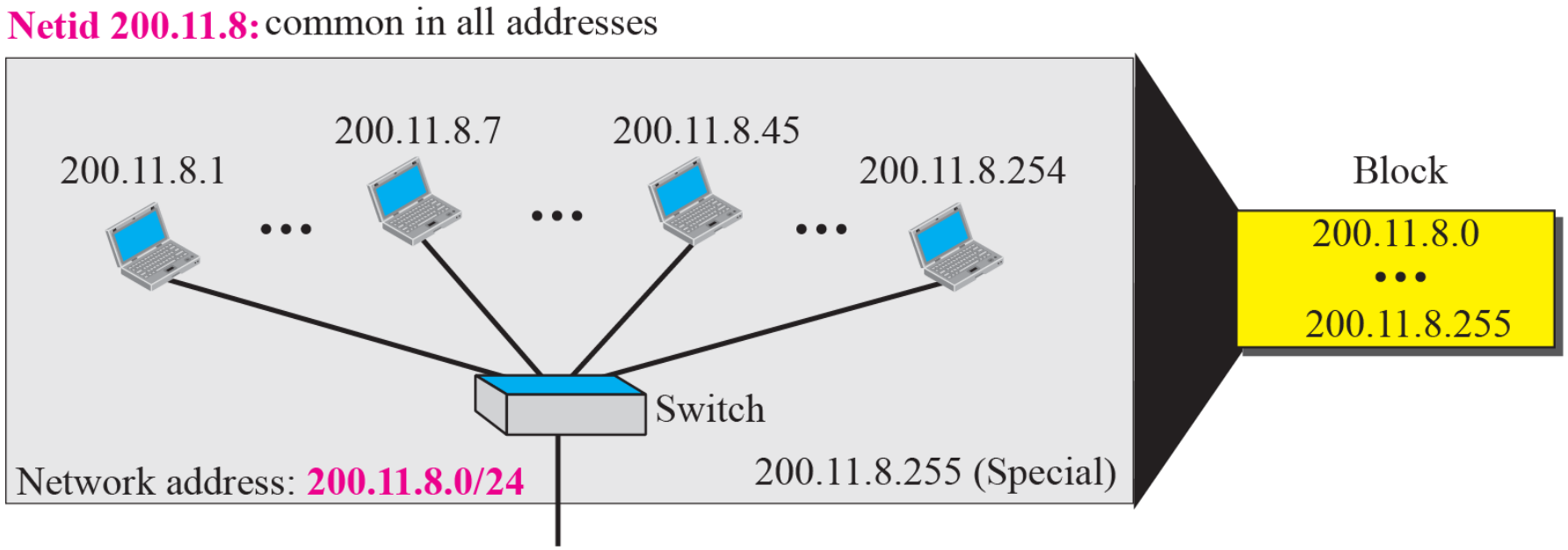
Netid 200.11.8: common in all addresses
200.11.8.1
200.11.8.7
200.11.8.45
200.11.8.254
Switch
Network address: 200.11.8.0/24
200.11.8.255 (Special)
Block
200.11.8.0
200.11.8.255

Sample Internet

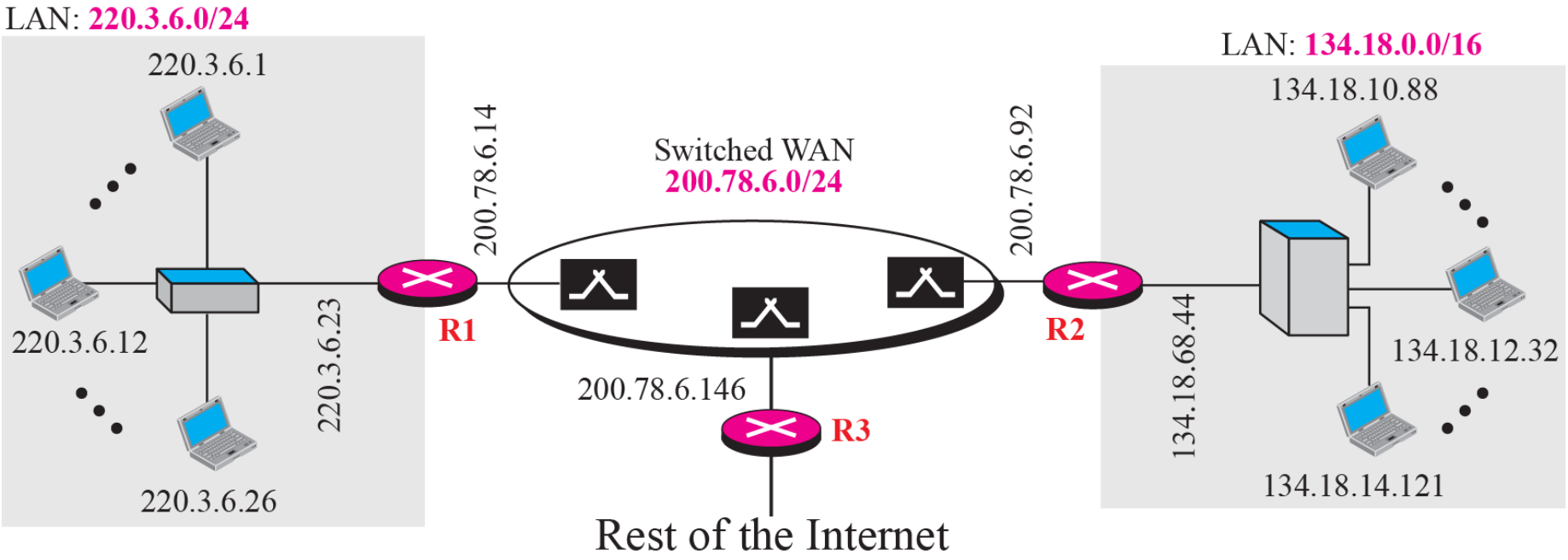

The network address is the identifier of a network.

Network Address

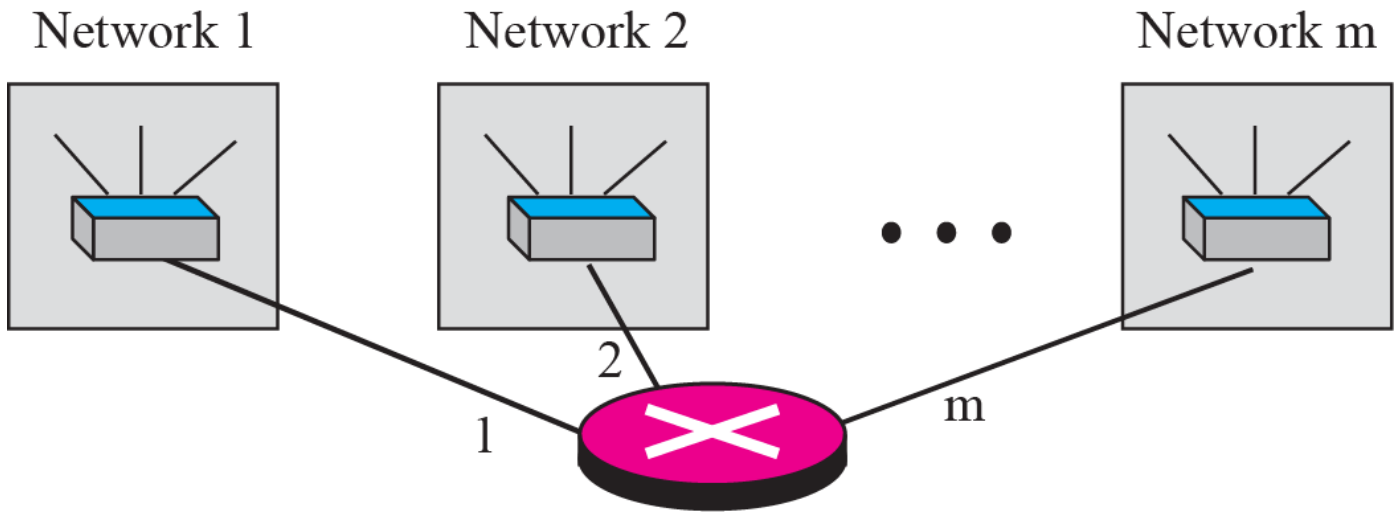

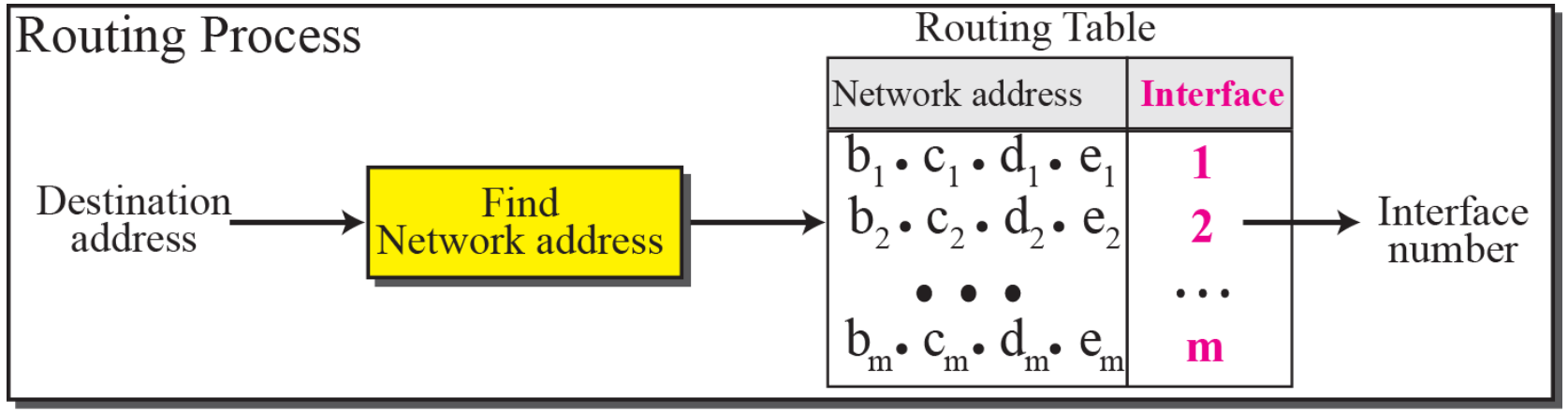

Network mask

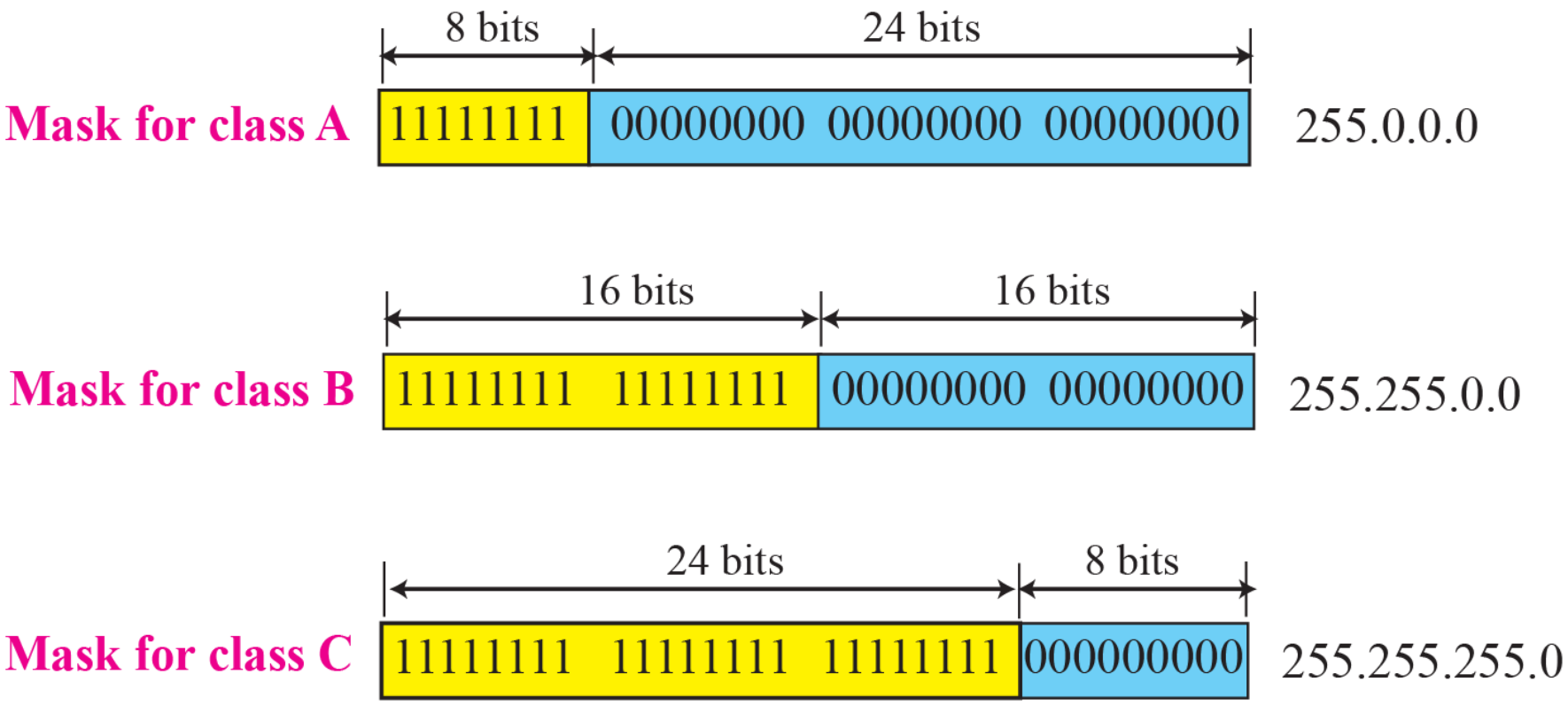

Finding a network address using the default mask

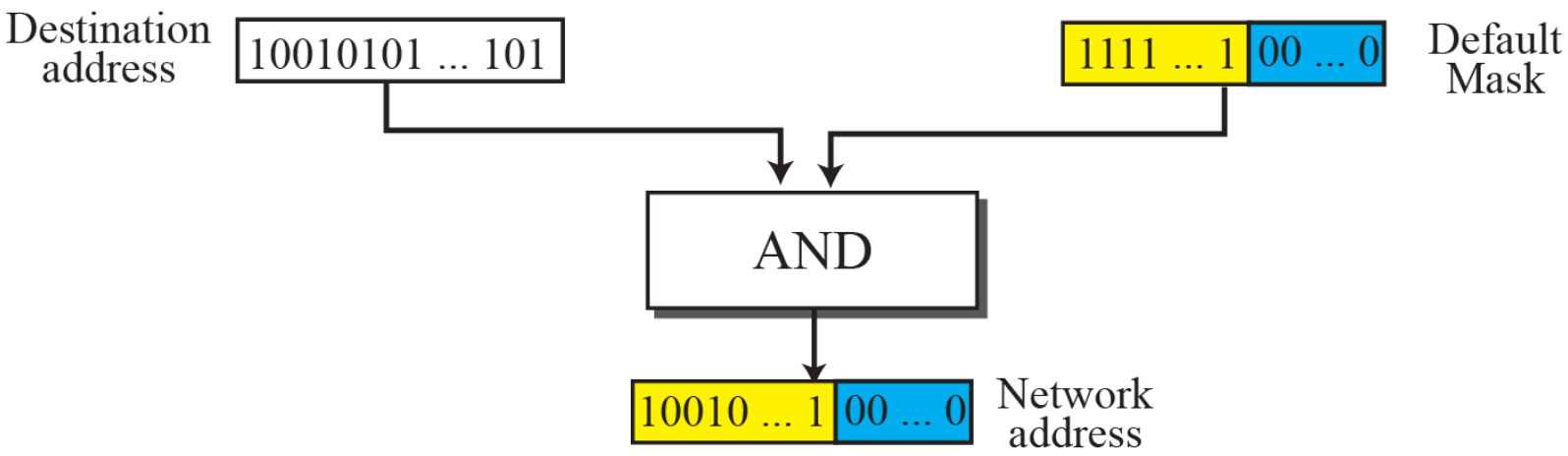

Example

A router receives a packet with the destination address 201.24.67.32. Show how the router finds the network address of the packet.

Solution

Since the class of the address is B, we assume that the router applies the default mask for class B, 255.255.0.0 to find the network address.

Destination address	→	201	.	24	.	67	.	32
Default mask	→	255	.	255	.	0	.	0
Network address	→	201	.	24	.	0	.	0

Subnetting & Supernetting

Subnetting Concept

- Figure shows a network using class B addresses before subnetting. We have just one network with almost 2^{16} hosts. The whole network is connected, through one single connection, to one of the routers in the Internet. Note that we have shown /16 to show the length of the netid (class B).

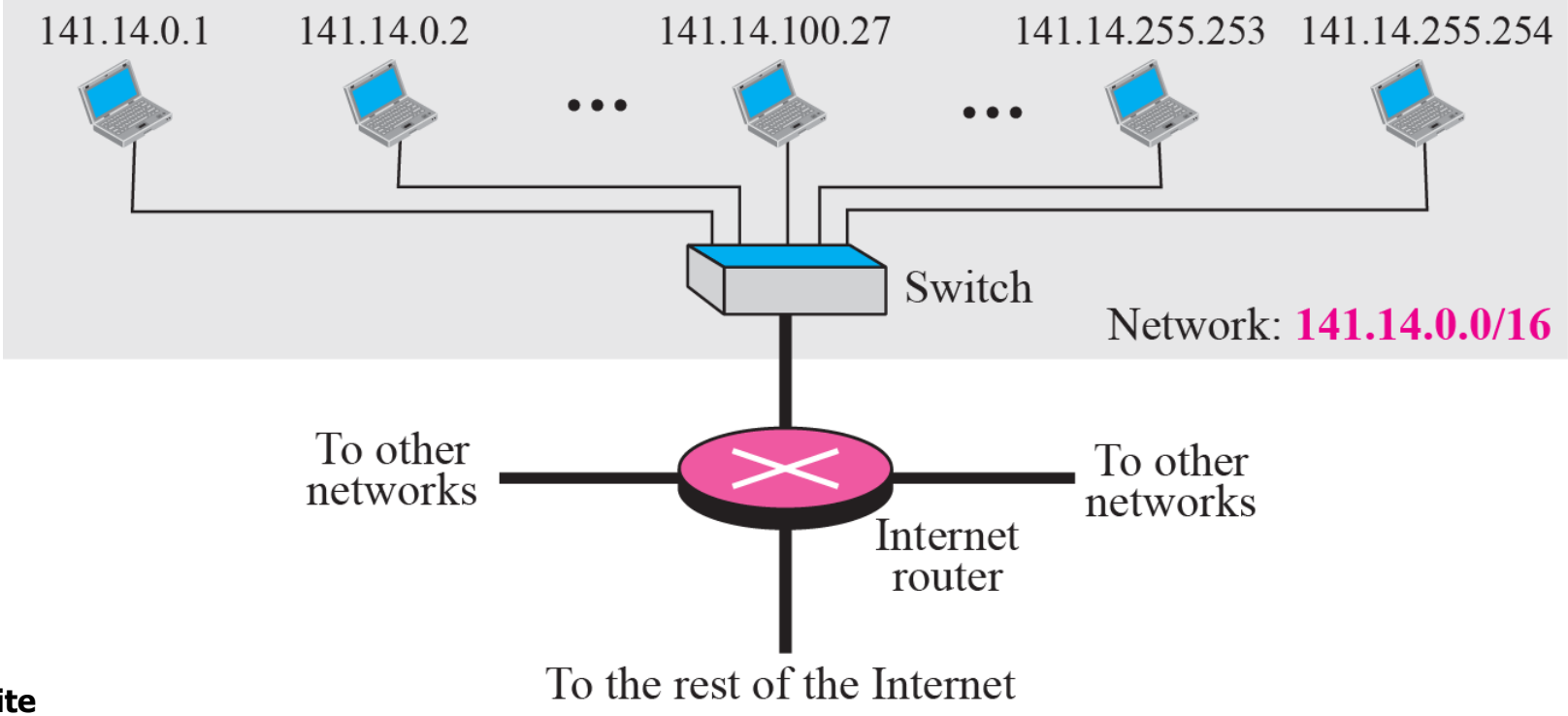

Subnetting

- Figure shows the same network after subnetting.
- The whole network is still connected to the Internet through the same router.
- However, the network has used a private router to divide the network into four subnetworks.
- The rest of the Internet still sees only one network; internally the network is made of four subnetworks.
- Each subnetwork can now have almost 2^{14} hosts.
- The network can belong to a university campus with four different schools (buildings).
- After subnetting, each school has its own subnetworks, but still the whole campus is one network for the rest of the Internet.
- Note that /16 and /18 show the length of the netid and subnetids.

Subnetting

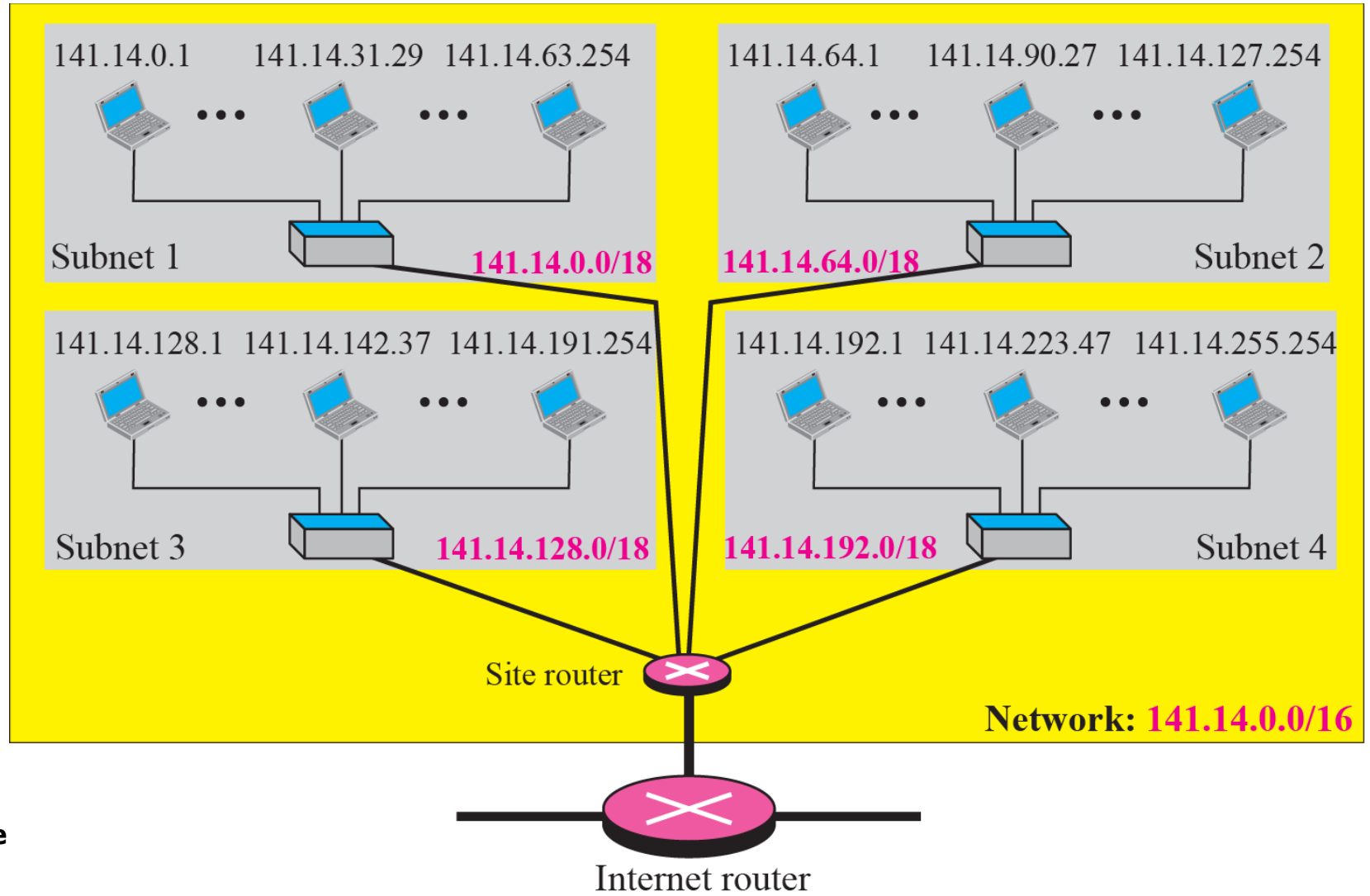
141.14.0.1
141.14.31.29
141.14.63.254
Subnet 1
141.14.0.0/18
141.14.64.1
141.14.90.27
141.14.127.254
141.14.64.0/18
Subnet 2
141.14.128.1
141.14.142.37
141.14.191.254
Subnet 3
141.14.128.0/18
141.14.192.1
141.14.223.47
141.14.255.254
141.14.192.0/18
Subnet 4
Site router
Network: 141.14.0.0/16
Internet router

Network and Subnetwork mark

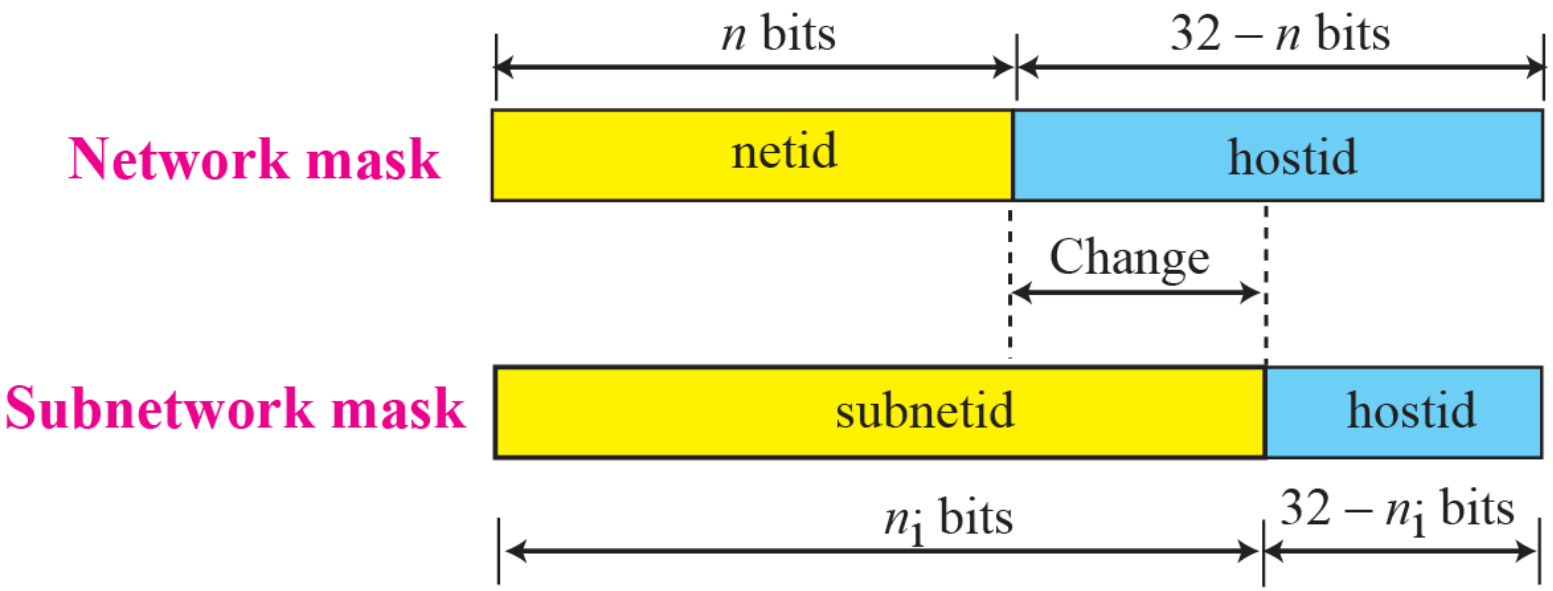

Example

- In Example, we divided a class B network into four subnetworks. The value of n = 16 and the value of
  - $n_1 = n_2 = n_3 = n_4 = 16 + \log_2 4 = 18$.
- This means that the subnet mask has eighteen 1s
- and fourteen 0s. In other words, the subnet mask is 255.255.192.0 which is different from the network mask for class B (255.255.0.0).

Example

In Example, we show that a network is divided into four subnets. Since one of the addresses in subnet 2 is 141.14.120.77, we can find the subnet address as:

Address	→	141	.	14	.	120	.	77
Mask	→	255	.	255	.	192	.	0
Subnet Address	→	141	.	14	.	64	.	0

The values of the first, second, and fourth bytes are calculated using the first short cut for AND operation. The value of the third byte is calculated using the second short cut for the AND operation.

Address (120)	0	+	64	+	32	+	16	+	8	+	0	+	0	+	0
Mask (192)	128	+	64	+	0	+	0	+	0	+	0	+	0	+	0
Result (64)	0	+	64	+	0	+	0	+	0	+	0	+	0	+	0

Comparison of subnet, default, and supernet mask

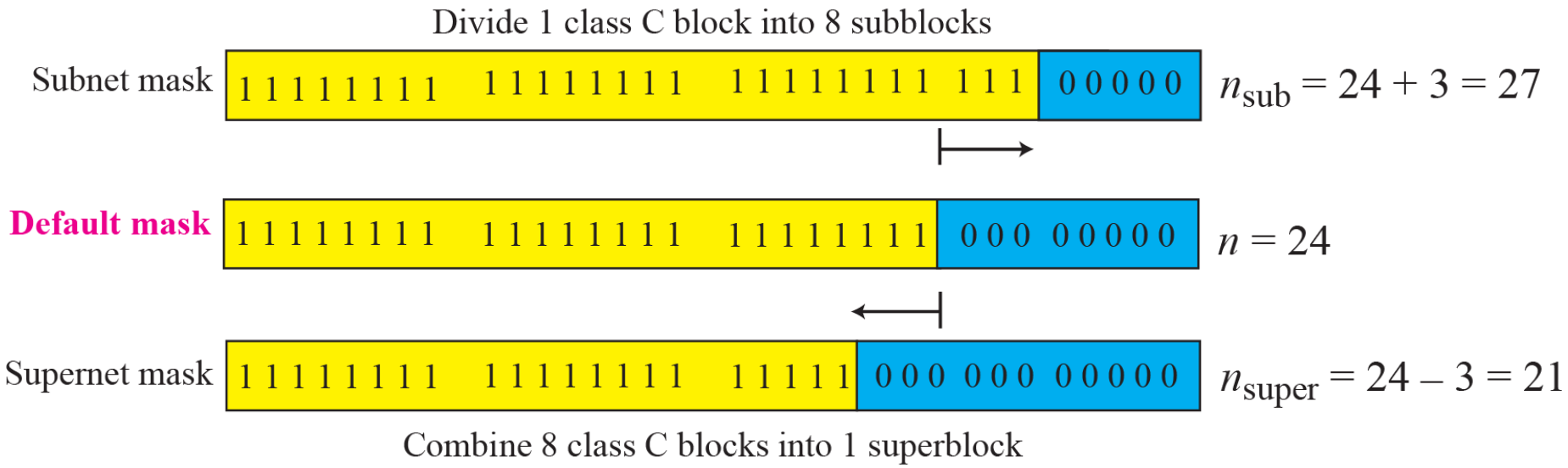

CLASSLESS ADDRESSING

- Subnetting and supernetting in classful addressing did not really solve the address shortage problem.
- With the growth of the Internet, it was clear that a larger address space was needed as a long-term solution.
- Although the long-range solution has already been planned and is called IPv6, a short-term solution was also devised to use the same address space but to change the distribution of addresses to provide a fair share to each organization.
- The short-term solution still uses IPv4 addresses, but it is called *classless addressing*.

IP addressing: CIDR

CIDR: Classless InterDomain Routing (pronounced "cider")
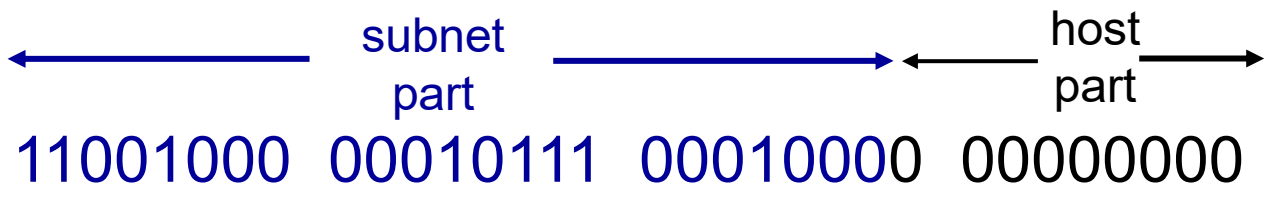
- subnet portion of address of arbitrary length
- address format: a.b.c.d/x, where x is # bits in subnet portion of address