Network Layer

Anand Baswade
anand@iitbhilai.ac.in

CLASSLESS ADDRESSING

- Subnetting and supernetting in classful addressing did not really solve the address shortage problem.
- With the growth of the Internet, it was clear that a larger address space was needed as a long-term solution.
- Although the long-range solution has already been planned and is called IPv6, a short-term solution was also devised to use the same address space but to change the distribution of addresses to provide a fair share to each organization.
- The short-term solution still uses IPv4 addresses, but it is called *classless addressing*.

IP addressing: CIDR

CIDR: Classless InterDomain Routing (pronounced "cider")

- subnet portion of address of arbitrary length
- address format: a.b.c.d/x, where x is # bits in subnet portion of address

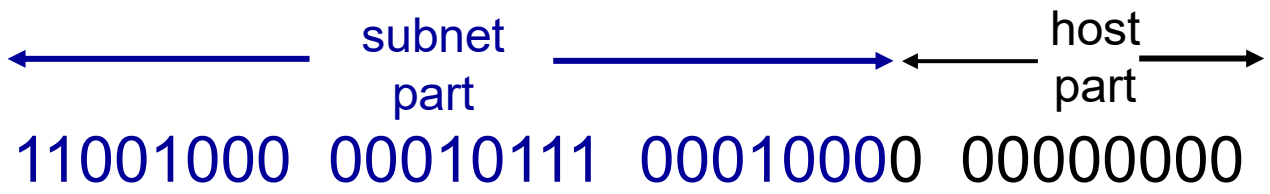

200.23.16.0/23

Variable-length blocks in classless addressing

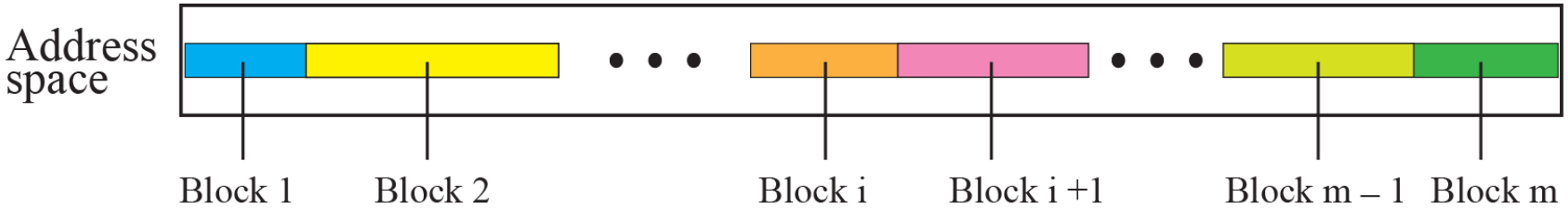

In classless addressing, the prefix defines the network and the suffix defines the host.

Prefix and suffix

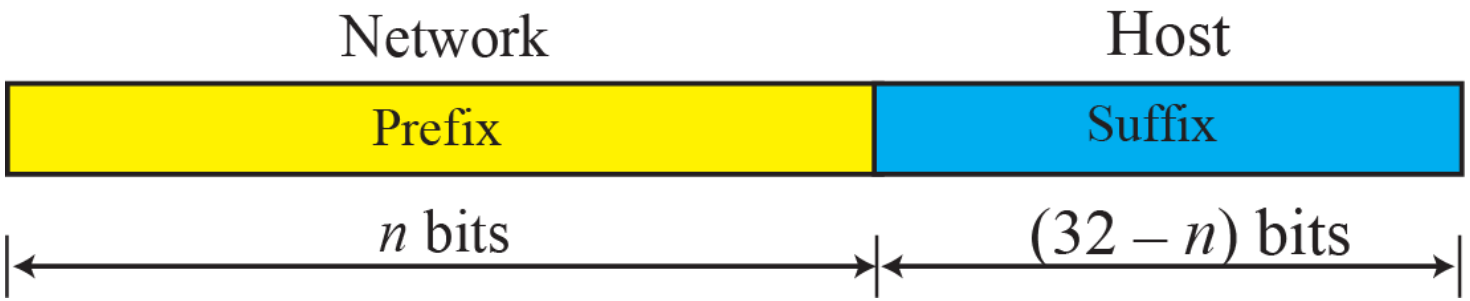

The prefix length in classless addressing can be 1 to 32.

Example 1

What is the prefix length and suffix length if the whole Internet is considered as one single block with 4,294,967,296 addresses?

Solution

In this case, the prefix length is 0 and the suffix length is 32. All 32 bits vary to define 2^{32} = 4,294,967,296 hosts in this single block.

Slash notation

- The number of addresses in a block is inversely related to the value of the prefix length, *n*. A small *n* means a larger block; a large *n* means a small block.

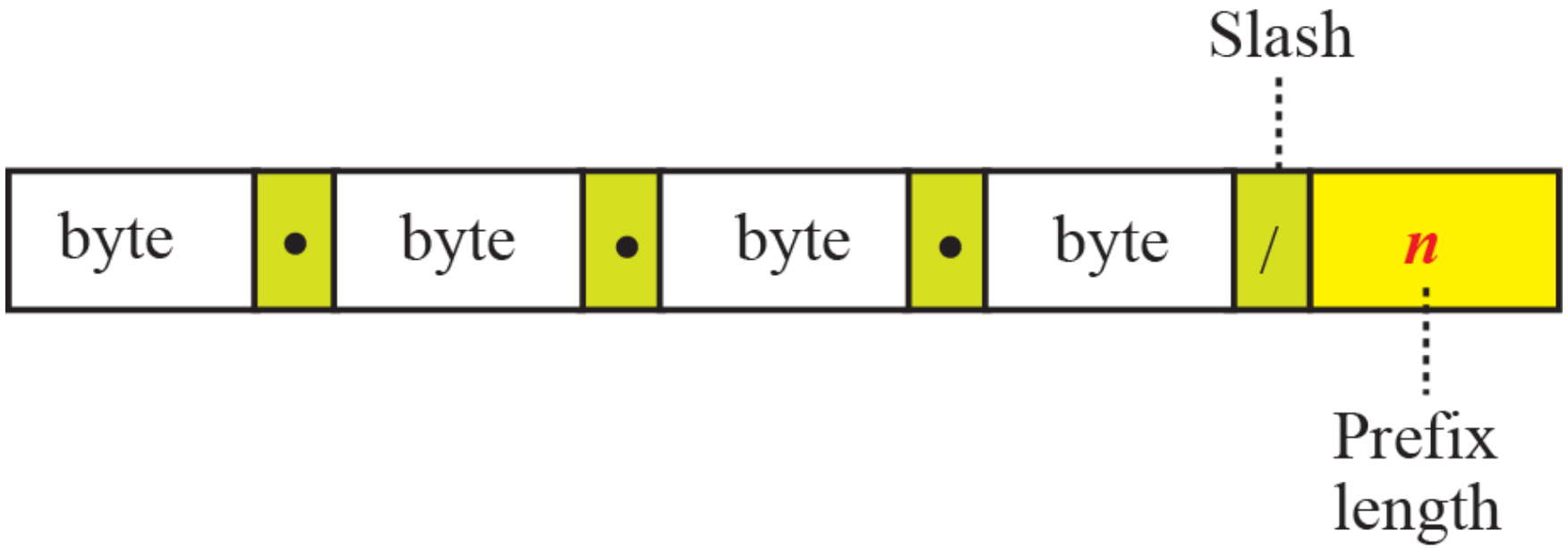

Example

- In classless addressing, we need to know one of the addresses in the block and the prefix length to define the block.
- In classless addressing, an address cannot per se define the block the address belongs to. For example, the address 230.8.24.56 can belong to many blocks some of them are shown below with the value of the prefix associated with that block:

Prefix length:16	→	Block:	230.8.0.0	to	230.8.255.255
Prefix length:20	→	Block:	230.8.16.0	to	230.8.31.255
Prefix length:26	→	Block:	230.8.24.0	to	230.8.24.63
Prefix length:27	→	Block:	230.8.24.32	to	230.8.24.63
Prefix length:29	→	Block:	230.8.24.56	to	230.8.24.63
Prefix length:31	→	Block:	230.8.24.56	to	230.8.24.57

Example

The following addresses are defined using slash notations.

a. In the address 12.23.24.78/8, the network mask is 255.0.0.0. The mask has eight 1s and twenty-four 0s. The prefix length is 8; the suffix length is 24.

b. In the address 130.11.232.156/16, the network mask is 255.255.0.0. The mask has sixteen 1s and sixteen 0s.The prefix length is 16; the suffix length is 16.

c. In the address 167.199.170.82/27, the network mask is 255.255.255.224. The mask has twenty-seven 1s and five 0s. The prefix length is 27; the suffix length is 5.

Example

One of the addresses in a block is 167.199.170.82/27. Find the number of addresses in the network, the first address, and the last address.

Solution

The value of n is 27. The network mask has twenty-seven 1s and five 0s. It is 255.255.255.240.

a. The number of addresses in the network is $2^{32-n} = 32$.

b. We use the AND operation to find the first address (network address). The first address is 167.199.170.64/27.

Address in binary:	10100111	11000111	10101010	01010010
Network mask:	11111111	11111111	11111111	11100000
First address:	10100111	11000111	10101010	01000000

Cont..

c. To find the last address, we first find the complement of the network mask and then OR it with the given address: The last address is 167.199.170.95/27.

Address in binary:	10100111	11000111	10101010	01010010
Complement of network mask:	00000000	00000000	00000000	00011111
Last address:	10100111	11000111	10101010	01011111

Example

One of the addresses in a block is 17.63.110.114/24. Find the number of addresses, the first address, and the last address in the block.

Solution

The network mask is 255.255.255.0.

a. The number of addresses in the network is $2^{32-24} = 256$.

b. To find the first address, we use the short cut methods discussed early in the chapter. The first address is 17.63.110.0/24.

Address:	17	.	63	.	110	.	114
Network mask:	255	.	255	.	255	.	0
First address (AND):	17	.	63	.	110	.	0

Cont..

c. To find the last address, we use the complement of the network mask and the first short cut method we discussed before. The last address is 17.63.110.255/24.

Address in binary:	10100111	11000111	10101010	01010010
Complement of network mask:	00000000	00000000	00000000	00011111
Last address:	10100111	11000111	10101010	01011111

Example

One of the addresses in a block is 110.23.120.14/20. Find the number of addresses, the first address, and the last address in the block.

Solution

The network mask is 255.255.240.0.

a. The number of addresses in the network is $2^{32-20} = 4096$.

b. To find the first address, we apply the first short cut to bytes 1, 2, and 4 and the second short cut to byte 3. The first address is 110.23.112.0/20.

Address:	110	.	23	.	120	.	14
Network mask:	255	.	255	.	240	.	0
First address (AND):	110	.	23	.	112	.	0

Example

c. To find the last address, we apply the first short cut to bytes 1, 2, and 4 and the second short cut to byte 3. The OR operation is applied to the complement of the mask. The last address is 110.23.127.255/20.

Address:	110	.	23	.	120	.	14
Network mask:	0	.	0	.	15	.	255
Last address (OR):	110	.	23	.	127	.	255

Example

An organization is granted the block 130.34.12.64/26. The organization needs four subnetworks, each with an equal number of hosts. Design the subnetworks and find the information about each network.

Solution

The number of addresses for the whole network can be found as $N = 2^{32-26} = 64$. The first address in the network is 130.34.12.64/26 and the last address is 130.34.12.127/26. We now design the subnetworks:

1. We grant 16 addresses for each subnetwork to meet the first requirement (64/16 is a power of 2).
2. The subnetwork mask for each subnetwork is:

$$n_1 = n_2 = n_3 = n_4 = n + \log_2 (N/N_i) = 26 + \log_2 4 = 28$$

3. We grant 16 addresses to each subnet starting from the first available address. Figure shows the subblock for each subnet. Note that the starting address in each subnetwork is divisible by the number of addresses in that subnetwork.

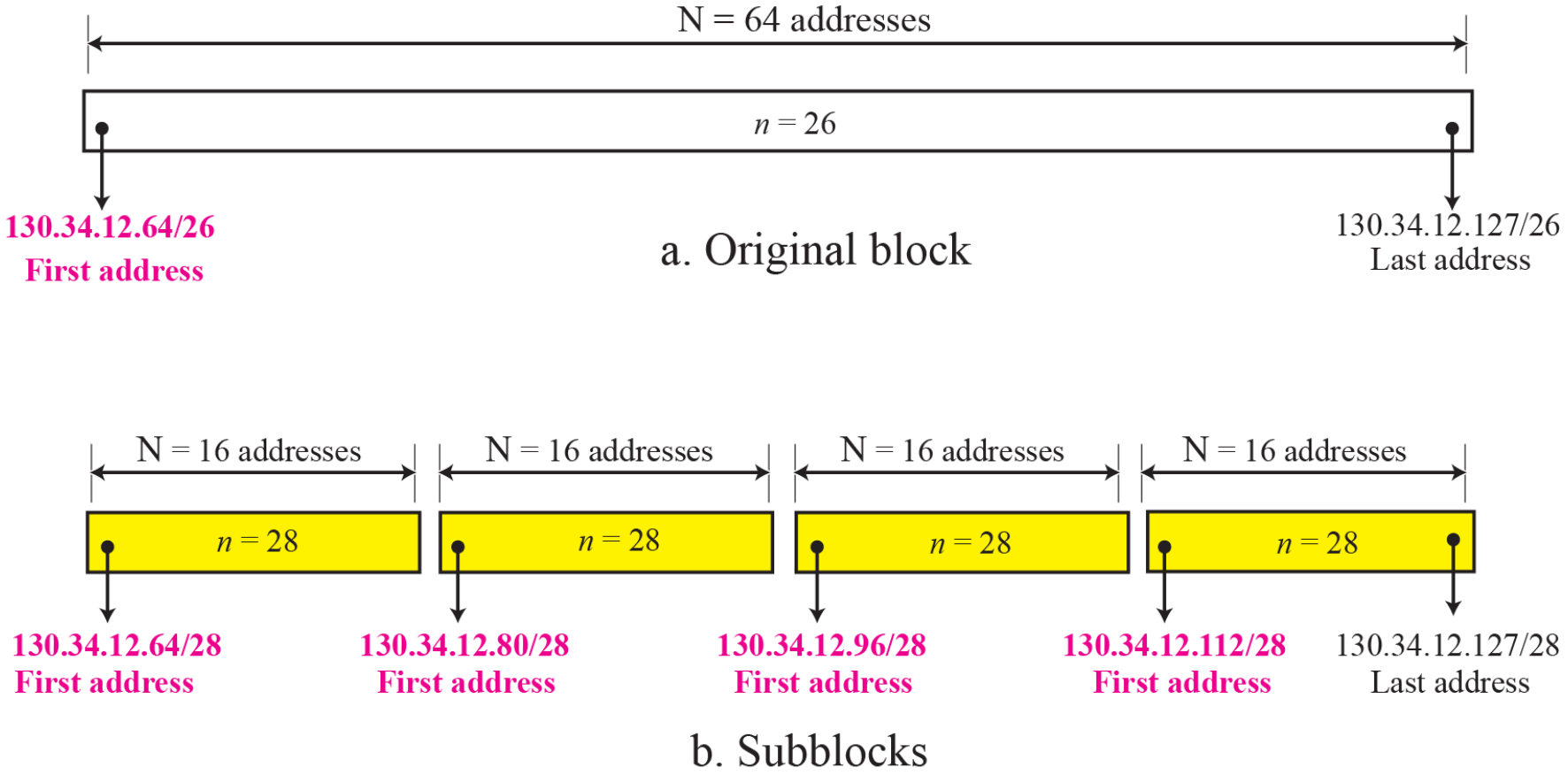

Example

An organization is granted a block of addresses with the beginning address 14.24.74.0/24. The organization needs to have 3 subblocks of addresses to use in its three subnets as shown below:

- ❑ One subblock of 120 addresses.
- ❑ One subblock of 60 addresses.
- ❑ One subblock of 10 addresses.

Solution

There are $2^{32-24} = 256$ addresses in this block. The first address is 14.24.74.0/24; the last address is 14.24.74.255/24.

a. The number of addresses in the first subblock is not a power of 2. We allocate 128 addresses. The subnet mask is 25. The first address is 14.24.74.0/25; the last address is 14.24.74.127/25.

Example

b. The number of addresses in the second subblock is not a power of 2 either. We allocate 64 addresses. The subnet mask is 26. The first address in this block is 14.24.74.128/26; the last address is 14.24.74.191/26.

c. The number of addresses in the third subblock is not a power of 2 either. We allocate 16 addresses. The subnet mask is 28. The first address in this block is 14.24.74.192/28; the last address is 14.24.74.207/28.

d. If we add all addresses in the previous subblocks, the result is 208 addresses, which means 48 addresses are left in reserve. The first address in this range is 14.24.74.209. The last address is 14.24.74.255.

e. Figure shows the configuration of blocks. We have shown the first address in each block.

Solution to Example

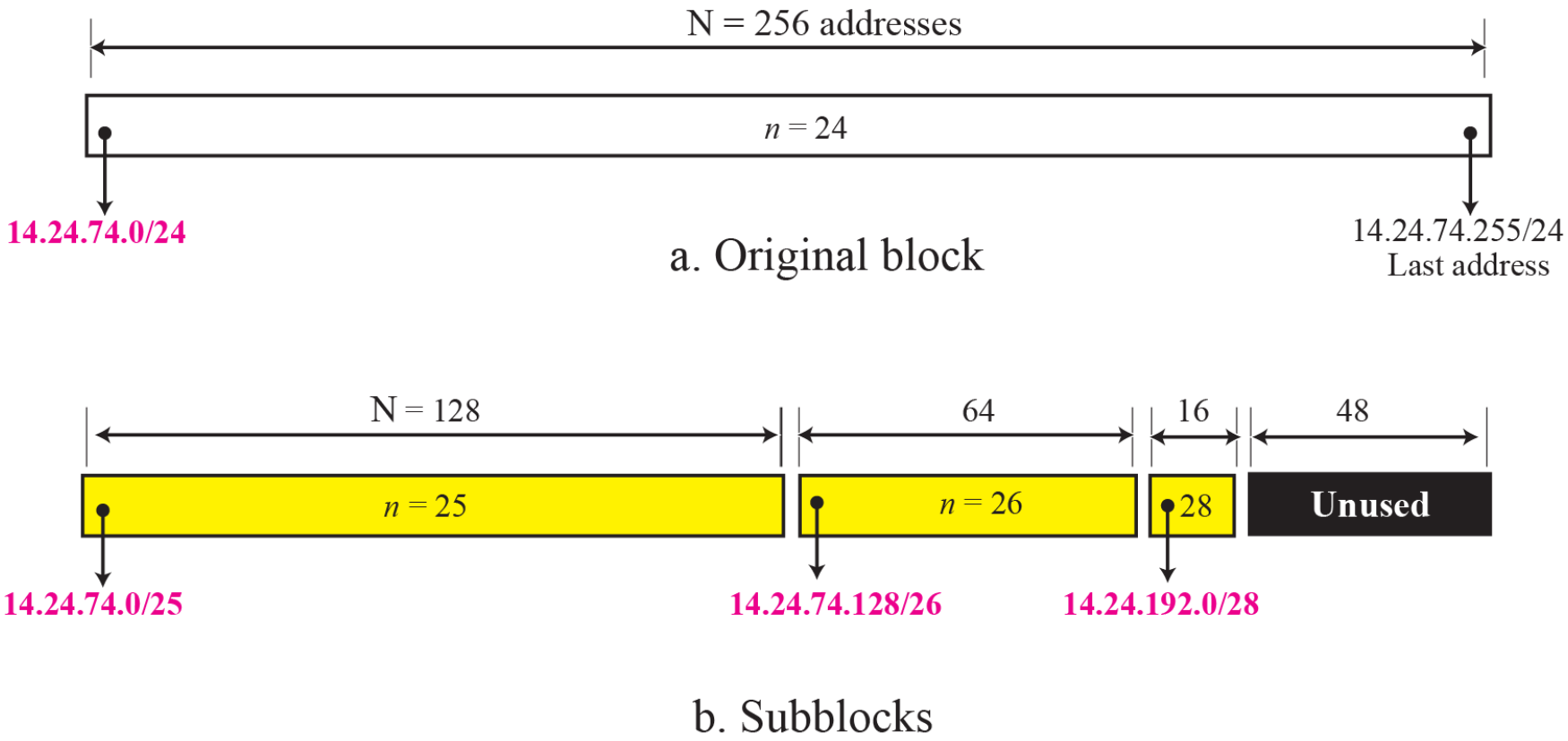

Special Address

Example of using the all-zero address

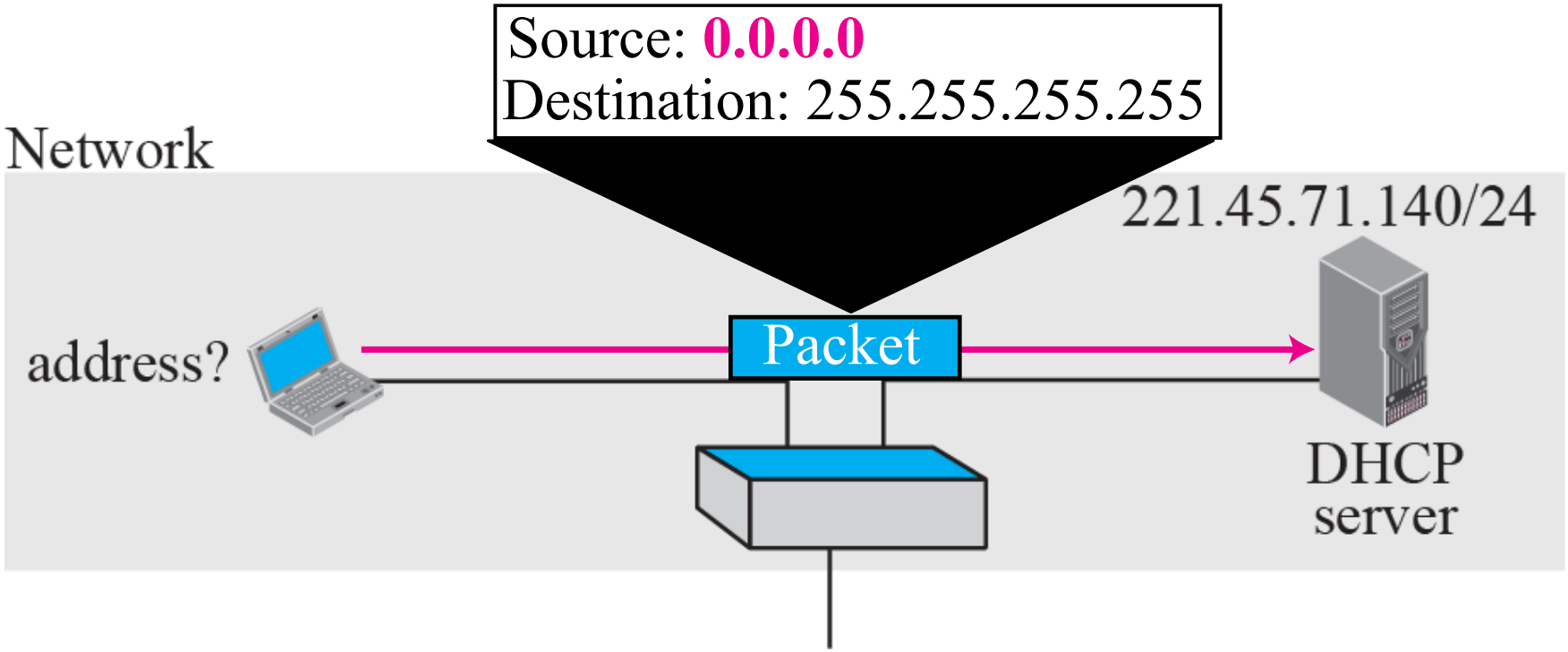

Example of limited broadcast address

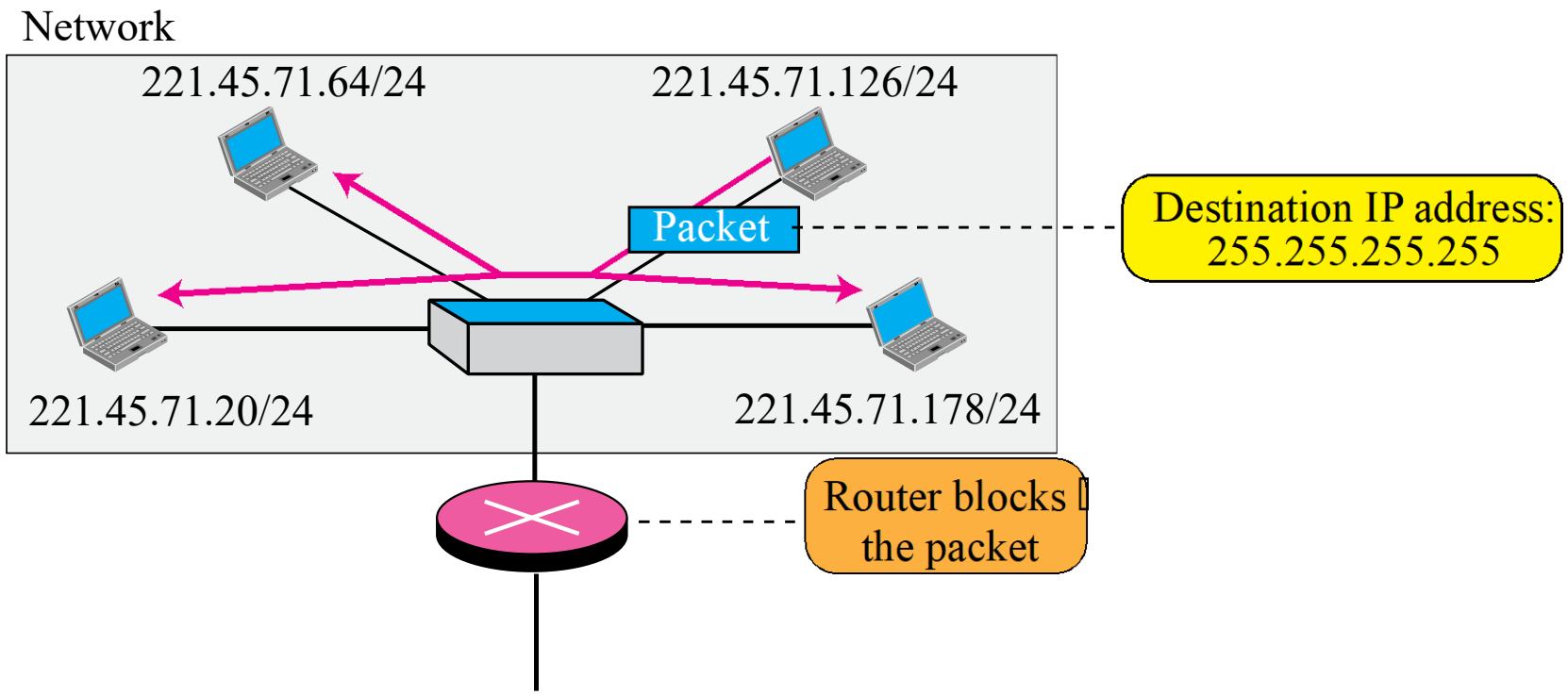

Example of loopback address

- 127.0.0.0 to 127.255.255.255 or 127.0.0.0/8 is loopback address block.
- With loopback address you can send packet to yourself.
- Used for troubleshooting
- Check if TCP/IP protocol suite is working properly.
- Generally we use ping 127.0.0.1 to test it.

Example of a directed broadcast address

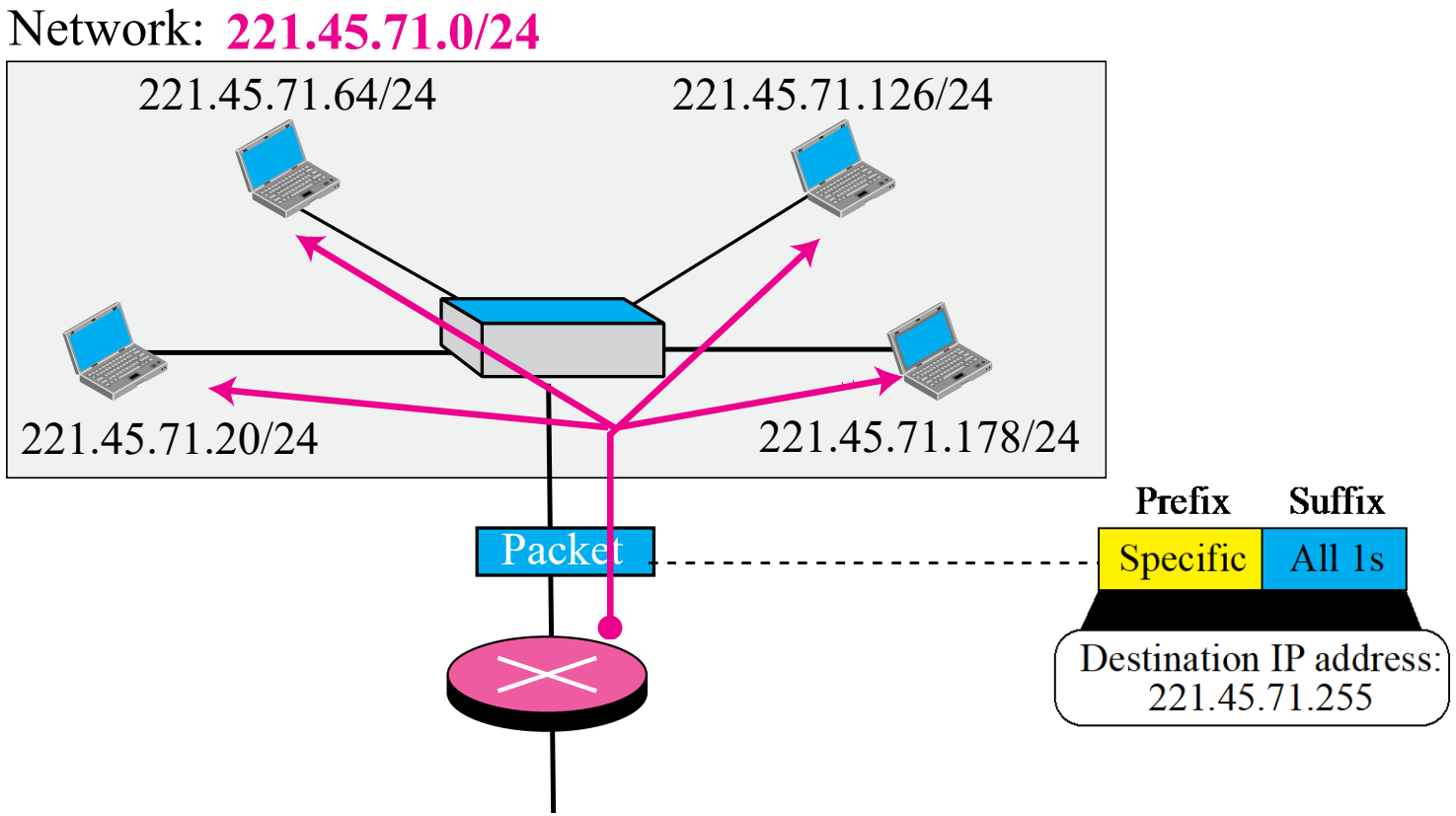

DHCP: Dynamic Host Configuration Protocol

IP addresses: how to get one?

That's actually two questions:

1. Q: How does a *host* get IP address within its network (host part of address)?
2. Q: How does a *network* get IP address for itself (network part of address)

How does *host* get IP address?

- hard-coded by sysadmin in config file (e.g., /etc/rc.config in UNIX)
- DHCP: Dynamic Host Configuration Protocol: dynamically get address from as server
  - "plug-and-play"

IP addresses: how to get one?

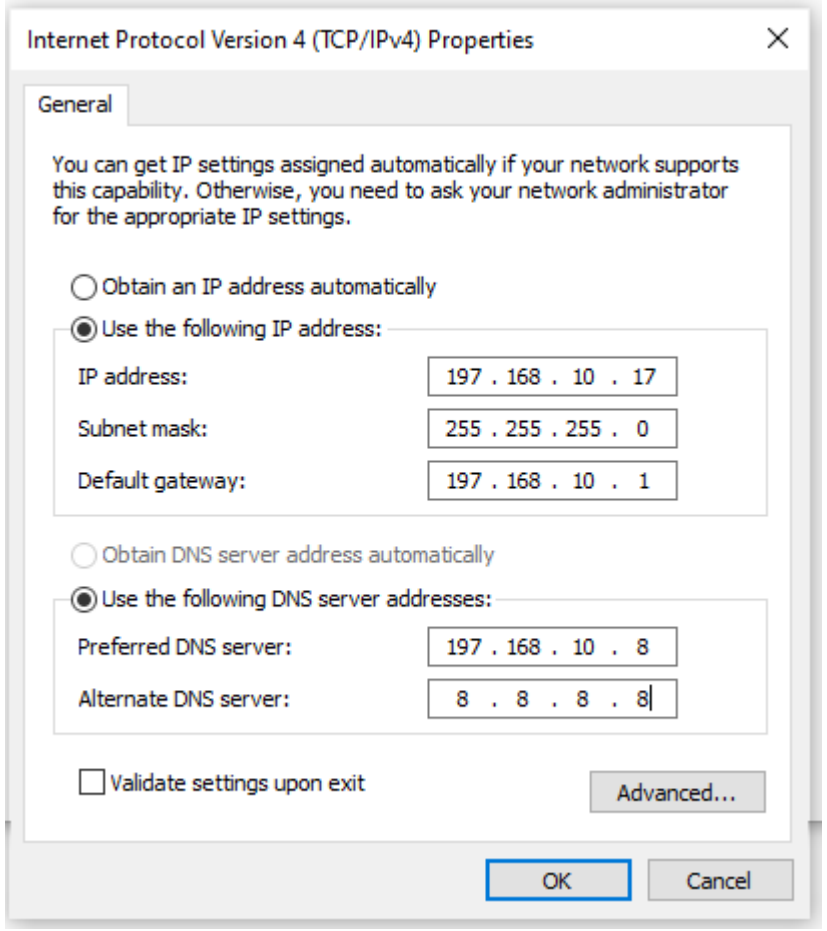

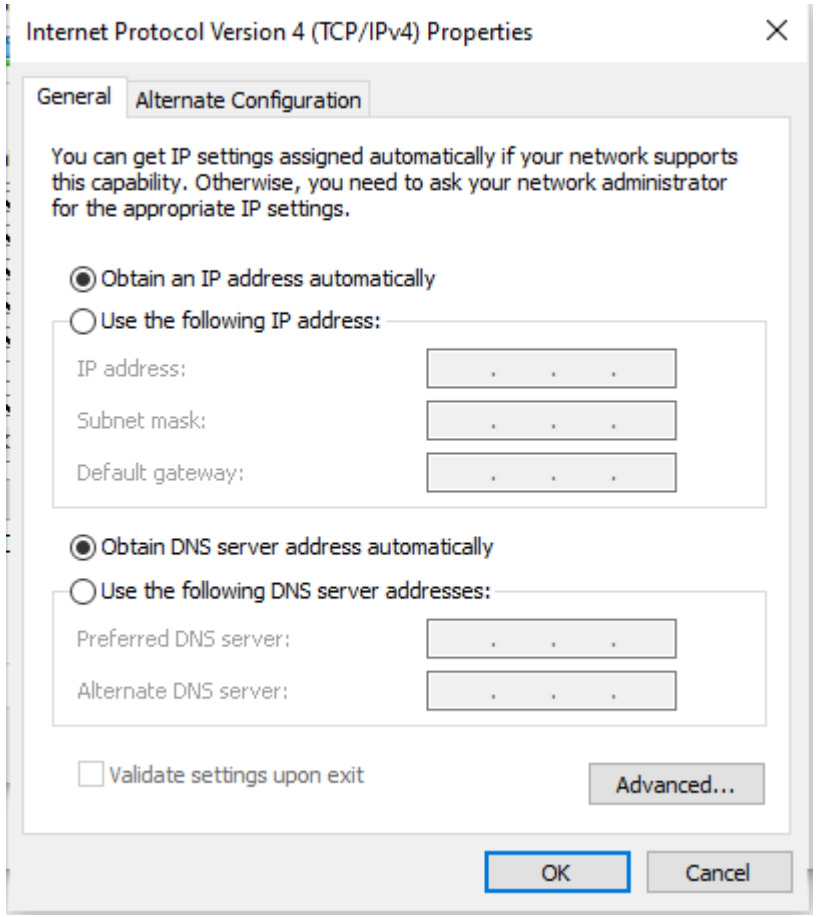

IP Cont..

```
Wireless LAN adapter Wi-Fi:

   Connection-specific DNS Suffix  . : iitbhilai.ac.in
   Description . . . . . . . . . . . : Qualcomm QCA9377 802.11ac Wireless Adapter
   Physical Address. . . . . . . . . : A4-FC-77-04-1F-A9
   DHCP Enabled. . . . . . . . . . . : Yes
   Autoconfiguration Enabled . . . . : Yes
   Link-local IPv6 Address . . . . . : fe80::d11b:a854:77b0:15c%15(Preferred)
   IPv4 Address. . . . . . . . . . . : 10.50.11.133(Preferred)
   Subnet Mask . . . . . . . . . . . : 255.255.192.0
   Lease Obtained. . . . . . . . . . : Friday, March 20, 2026 10:51:30 AM
   Lease Expires . . . . . . . . . . : Friday, March 20, 2026 4:51:11 PM
   Default Gateway . . . . . . . . . : 10.50.0.1
   DHCP Server . . . . . . . . . . . : 10.1.72.7
   DHCPv6 IAID . . . . . . . . . . . : 430242935
   DHCPv6 Client DUID. . . . . . . . : 00-01-00-01-26-BF-8A-7A-6C-2B-59-73-BC-41
   DNS Servers . . . . . . . . . . . : 192.168.10.87
                                       192.168.10.72
   NetBIOS over Tcpip. . . . . . . . : Enabled
```