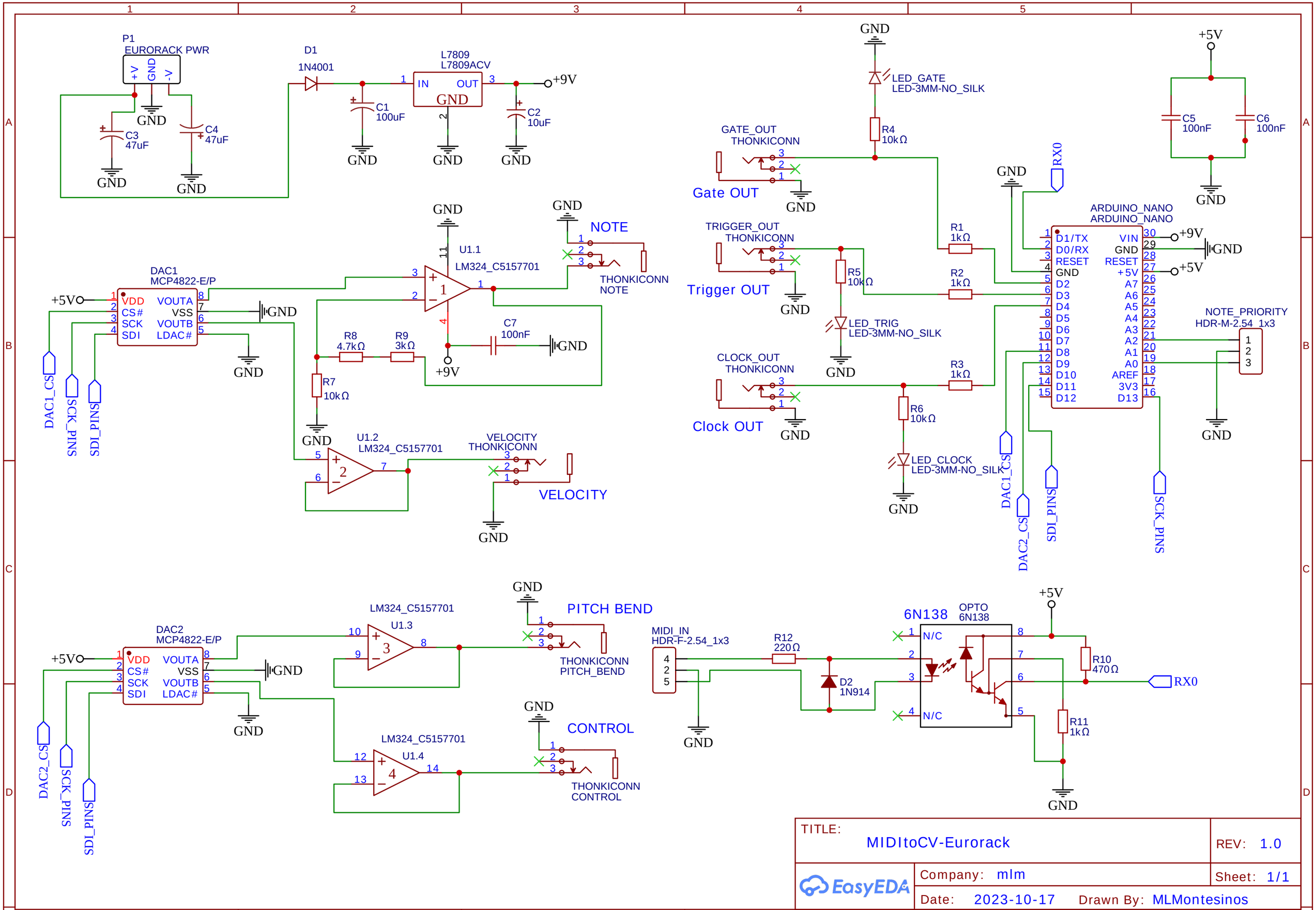

TITLE: MIDItoCV-Eurorack	REV: 1.0
EasyEDA	Company: mlm / Sheet: 1/1
	Date: 2023-10-17 / Drawn By: MLMontesinos