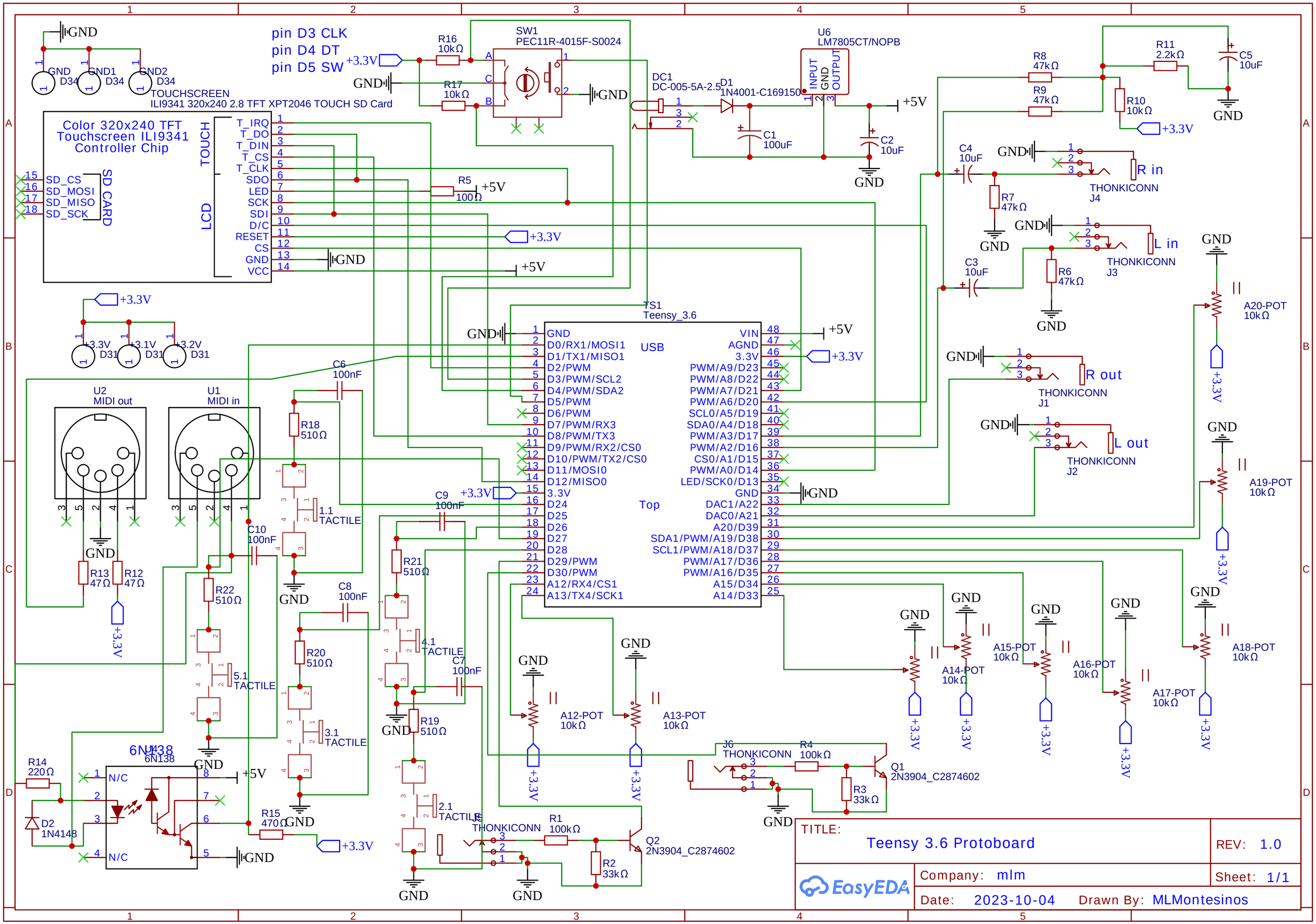
pin D3 CLK
pin D4 DT
pin D5 SW
TOUCHSCREEN
ILI9341 320x240 2.8 TFT XPT2046 TOUCH SD Card
Color 320x240 TFT Touchscreen ILI9341 Controller Chip
TOUCH
LCD
SD CARD
T_IRQ
T_DO
T_DIN
T_CS
T_CLK
SDO
LED
SCK
SDI
D/C
RESET
CS
GND
VCC
SD_CS
SD_MOSI
SD_MISO
SD_SCK
SW1
PEC11R-4015F-S0024
U6
LM7805CT/NOPB
INPUT
GND
OUTPUT
DC1
DC-005-5A-2.5
D1
1N4001-C169150
C1
100uF
C2
10uF
R16
10kΩ
R17
10kΩ
R5
100Ω
R8
47kΩ
R9
47kΩ
R10
10kΩ
R11
2.2kΩ
C5
10uF
C4
10uF
C3
10uF
R7
47kΩ
R6
47kΩ
R in
L in
R out
L out
THONKICONN
J4
J3
J1
J2
A20-POT
10kΩ
A19-POT
10kΩ
A18-POT
10kΩ
A17-POT
10kΩ
A16-POT
10kΩ
A15-POT
10kΩ
A14-POT
10kΩ
A13-POT
10kΩ
A12-POT
10kΩ
TS1
Teensy_3.6
USB
Top
VIN
AGND
3.3V
GND
D0/RX1/MOSI1
D1/TX1/MISO1
D2/PWM
D3/PWM/SCL2
D4/PWM/SDA2
D5/PWM
D6/PWM
D7/PWM/RX3
D8/PWM/TX3
D9/PWM/RX2/CS0
D10/PWM/TX2/CS0
D11/MOSI0
D12/MISO0
D24
D25
D26
D27
D28
D29/PWM
D30/PWM
A12/RX4/CS1
A13/TX4/SCK1
PWM/A9/D23
PWM/A8/D22
PWM/A7/D21
PWM/A6/D20
SCL0/A5/D19
SDA0/A4/D18
PWM/A3/D17
PWM/A2/D16
CS0/A1/D15
PWM/A0/D14
LED/SCK0/D13
DAC1/A22
DAC0/A21
A20/D39
SDA1/PWM/A19/D38
SCL1/PWM/A18/D37
PWM/A17/D36
PWM/A16/D35
A15/D34
A14/D33
U2
MIDI out
U1
MIDI in
R13
47Ω
R12
47Ω
C6
100nF
R18
510Ω
1.1
TACTILE
C10
100nF
R22
510Ω
5.1
TACTILE
C8
100nF
R20
510Ω
3.1
TACTILE
C9
100nF
R21
510Ω
4.1
TACTILE
C7
100nF
R19
510Ω
2.1
TACTILE
6N138
R14
220Ω
D2
1N4148
R15
470Ω
N/C
J6
THONKICONN
R4
100kΩ
R3
33kΩ
Q1
2N3904_C2874602
J5
THONKICONN
R1
100kΩ
R2
33kΩ
Q2
2N3904_C2874602
GND1
GND2
D34
+3.3V
+3.1V
+3.2V
D31
+5V
TITLE:
Teensy 3.6 Protoboard
REV: 1.0
Company: mlm
Sheet: 1/1
Date: 2023-10-04
Drawn By: MLMontesinos
EasyEDA