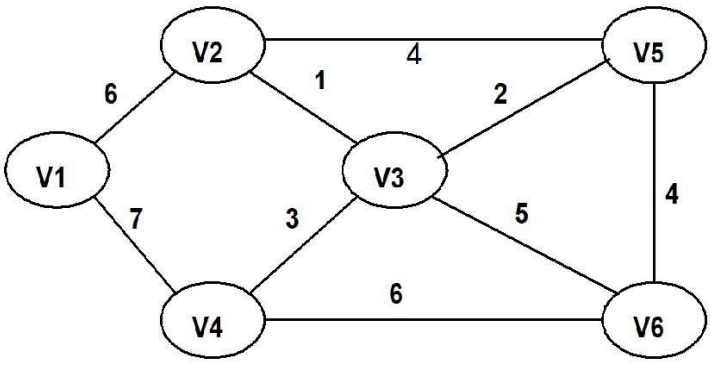

- A. (v1,v4)
- B. (v1,v2)
- C. (v4,v6)
- D. uncertain

2-2 分数 3 作者 陈越 单位 浙江大学

The minimum spanning tree of any weighted graph ___

- A. must be unique
- B. must not be unique
- C. exists but may not be unique
- D. may not exist

2-3 分数 3 作者 陈越 单位 浙江大学

The maximum flow in the network of the given Figure is:

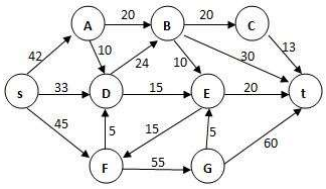

- A. 104
- B. 123
- C. 120
- D. 97

2-4 分数 2 作者 何钦铭 单位 浙江大学

When solving the maximum flow problem for graph G, if partial states of the G_f (will be the maximum flow when the algorithm terminates) and G_r (residual graph) are shown as the following, what must be the capacity of (v1, v2) or of (v2,v1) in the original graph G?

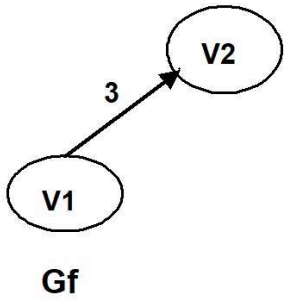

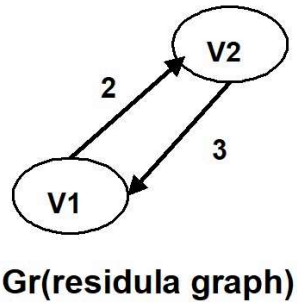

D. the capacity of (v1, v2) is 5

C. the capacity of (v1, v2) is 5

D. the capacity of (v2, v1) is 5