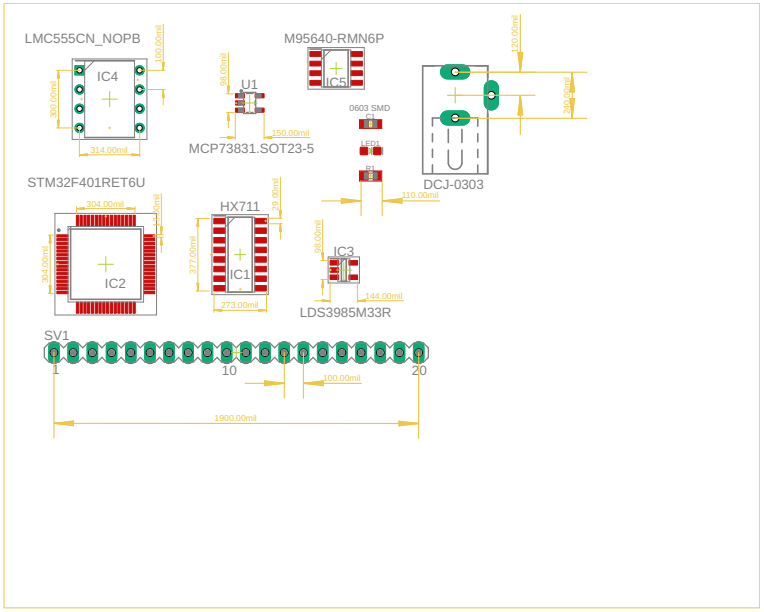
LMC555CN_NOPB
IC4
100.00mil
300.00mil
314.00mil
U1
98.00mil
150.00mil
MCP73831.SOT23-5
M95640-RMN6P
IC5
0603 SMD
C1
LED1
R1
110.00mil
120.00mil
240.00mil
DCJ-0303
STM32F401RET6U
304.02mil
20.00mil
324.00mil
IC2
HX711
29.00mil
377.00mil
IC1
273.00mil
IC3
98.00mil
144.00mil
LDS3985M33R
SV1
1
10
20
100.00mil
1900.00mil