EC6020

SMART VIBRATION AND EARTHQUAKE EARLY WARNING SYSTEM

MINI PROJECT PROPOSAL

GROUP NO:4

KUHANESAN D.	2022/E/024
PUGALINI M.	2022/E/098
THIPUSHANTH P.	2022/E/106
RATHINI R.	2022/E/115
YOGABALAN R.	2022/E/123

INTRODUCTION

Earthquakes and abnormal ground vibrations pose serious risks to human safety and infrastructure. Even minor tremors can cause panic, injuries, and structural damage if occupants are not warned in time. While large-scale earthquake monitoring systems exist, they are expensive, complex, and mainly deployed by government authorities. As a result, homes, schools, and small institutions lack access to affordable early warning mechanisms.

This project proposes a Smart Vibration & Earthquake Early Warning System that continuously monitors ground vibrations using sensors, detects abnormal activity at an early stage, and provides instant alerts through alarms and a user interface. The system is designed to be low-cost, reliable, and suitable for small-scale deployment, making early warning more accessible to the general public.

PROBLEM STATEMENT

Current earthquake and vibration monitoring approaches suffer from several limitations:

- Lack of early warning systems in residential and small institutional environments
- Delayed awareness of abnormal ground vibrations
- High cost and complexity of professional seismic monitoring equipment
- Absence of immediate local alerts for occupants
- Limited availability of real-time vibration monitoring for end users

These challenges highlight the need for a simple, affordable, and locally deployable earthquake and vibration detection solution.

PROPOSED SOLUTION

The proposed system addresses the identified problems through the following features:

- Continuous real-time monitoring of ground vibrations
- Early detection of abnormal vibration levels using an accelerometer sensor
- Instant audible and visual alerts using a buzzer, LEDs, and LCD display
- Wireless data transmission for remote monitoring
- A custom-developed web interface for real-time status and alert visualization
- A low-cost and scalable embedded system design suitable for homes and small institutions

DESIGN OVERVIEW

System Architecture

The system consists of a microcontroller-based embedded unit that interfaces with sensors and actuators, along with a software-based user interface.

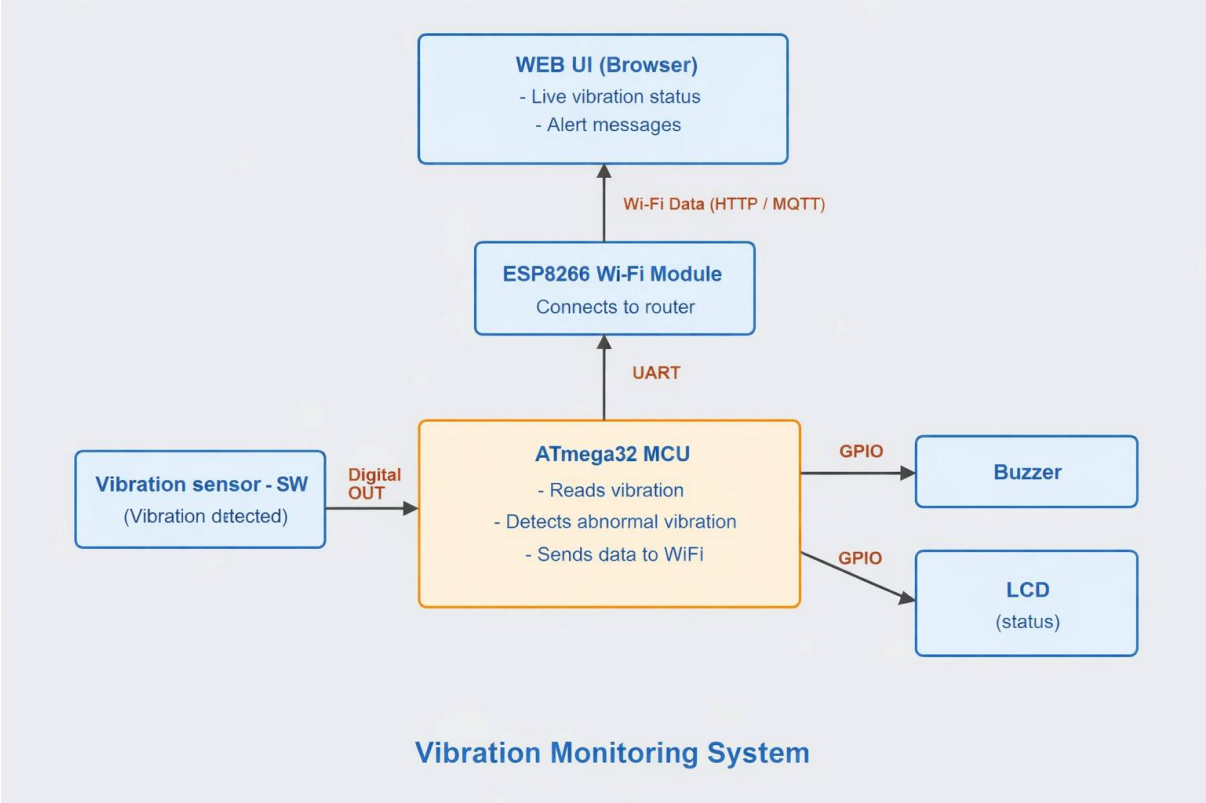

FIGURE 1: SYSTEM ARCHITECTURE

Hardware Layer:

- Vibration sensor - SW 420 detects ground vibrations
- ATmega328P microcontroller processes sensor data
- Buzzer, LEDs, and LCD provide local alerts
- ESP8266 Wi-Fi module enables wireless communication

Software Layer:

- Embedded C firmware for sensor reading, threshold detection, and alert generation
- Backend server (Node.js) for data handling
- Web-based UI for real-time monitoring and alerts

Communication Protocols

UART (Serial Communication):

- Used between the microcontroller and ESP8266 Wi-Fi module
- Provides a simple and reliable method for transmitting vibration data and alerts
- Suitable for low-bandwidth messages such as sensor values and warning signals

Parallel GPIO Communication:

- Used for interfacing the 16×2 LCD with the microcontroller
- Enables real-time display of system status such as “SAFE” or “VIBRATION DETECTED”
- Cost-effective and simple to implement

Digital GPIO Input:

- Used for vibration sensor signal input
- Allows fast and reliable detection of threshold-crossing vibration events

RESTful APIs (HTTP):

- Used between the hardware gateway and the web application backend
- Enables platform-independent and scalable communication

circuit design

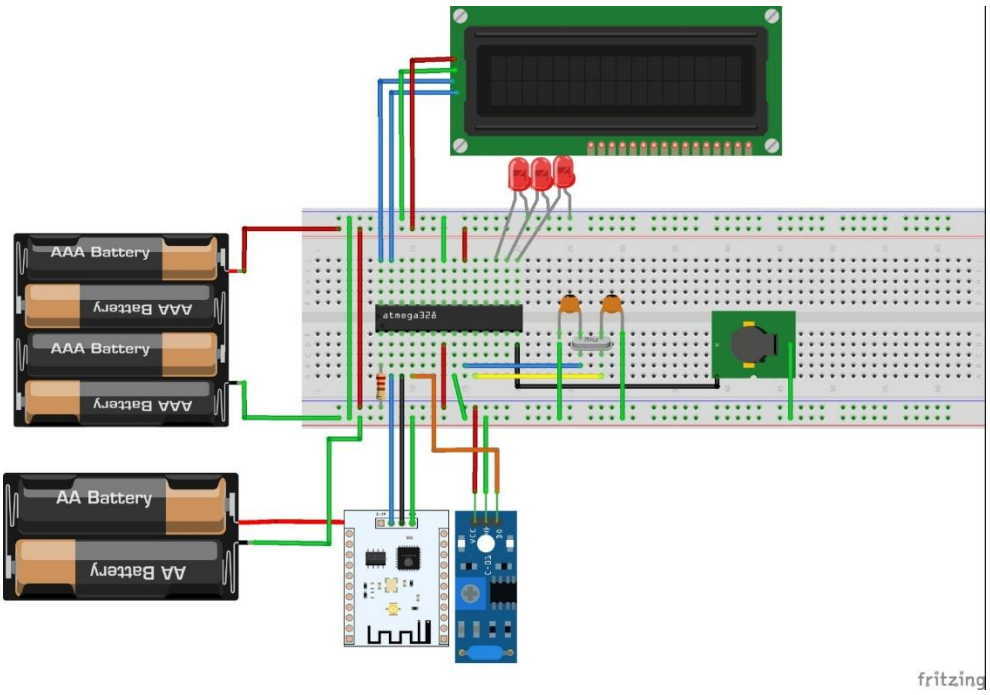

FIGURE 2: CIRCUIT DESIGN

TECHNOLOGIES TO BE USED

Hardware Components

- ATmega328P Microcontroller
- Vibration sensor - SW 420
- ESP8266 Wi-Fi module
- LCD 16×2 Display
- Buzzer
- LED Indicators
- Push Button
- Voltage Regulator
- Crystal Oscillator
- Capacitors and Resistors
- Battery and Power Supply Components
- Breadboard and Jumper Wires
- Converter-CP2102
- I2C module for LCD display

software technologies

The software component of the proposed earthquake alarm system consists of embedded firmware development, backend services, and a web-based user interface.

- **Embedded C**
  Used to program the microcontroller for reading vibration sensor data, processing signals, and controlling alarms and communication modules.

- **Software languages(html,css,javascript , nodejs)**
  The web page is developed using **HTML** to define the structure and layout of the content, **CSS** to design and style the user interface and ensure a responsive appearance, and **JavaScript** to add interactivity and dynamically update vibration data and alert messages. The backend of the web application is implemented using **Node.js**, which handles server-side logic and communication with the earthquake detection system through **RESTful APIs**. These technologies together

enable a reliable, user-friendly, and real-time web-based monitoring and alert system.

- **RESful APIs(HTTP)**

  Communication API
  Transfer vibration data and alert messages between hardware and backend
  Why: Platform-independent, simple, and reliable communication method

- **Github repo link**
  https://github.com/PugaliniMohanaraj/Smart-Vibration-Earthquake-Early-Warning-System
  -with added initial readme file

UNIQUENESS OF THE PROPOSED SYSTEM

The proposed system stands out due to the following innovative aspects:

- **Low-Cost and Feasible Design:** Affordable alternative to professional seismic systems
- **Localized Vibration Detection:** Detects vibrations at the deployment location without reliance on large seismic networks
- **Instant Local Alerts:** Immediate audio-visual warnings to reduce panic and improve reaction time
- **Custom Web Interface:** Team-developed web application for real-time monitoring and alerts
- **Remote Monitoring Capability:** Users can view vibration status remotely through the web interface
- **Dedicated Embedded Reliability:** Hardware-based system ensures faster and more reliable operation than smartphone-only solutions
- **Integrated Hardware–Software Approach:** Seamless combination of sensing, communication, alerting, and UI
- **Scalable Design:** Can be extended with data logging, additional sensors, or cloud integration

BUDGET ESTIMATION

Component	Est. Price (LKR)
ATmega328P IC	750.00
LCD 16x2 Display	750.00
SIM800L GSM Module	950.00
ESP8266 Wi-Fi module	500.00
Vibration sensor - SW 420	120.00
AAA Battery	600.00
Breadboard	210.00
Jumper Wires kit	500.00
Capacitor 220uf(2)	10.00
buzzer	50.00
16 MHz Cristal oscillator	20.00
Resistor(10k)	20.00
Converter-CP2102	550.00
I2C module for LCD display	150.00
Total Estimated Cost	**5160.00**

PROJECT TIMELINE

Activity	Weeks											
	3	4	5	6	7	8	9	10	11	12	13	14
Planning & Design												
Proposal Preparation												
Component Selection & Purchase												
System Design												
Hardware Development												
Firmware Development												
Mid Evaluation Preparation												
Web Application Development												
System Integration and Testing												
Final Evaluation and Documentation												