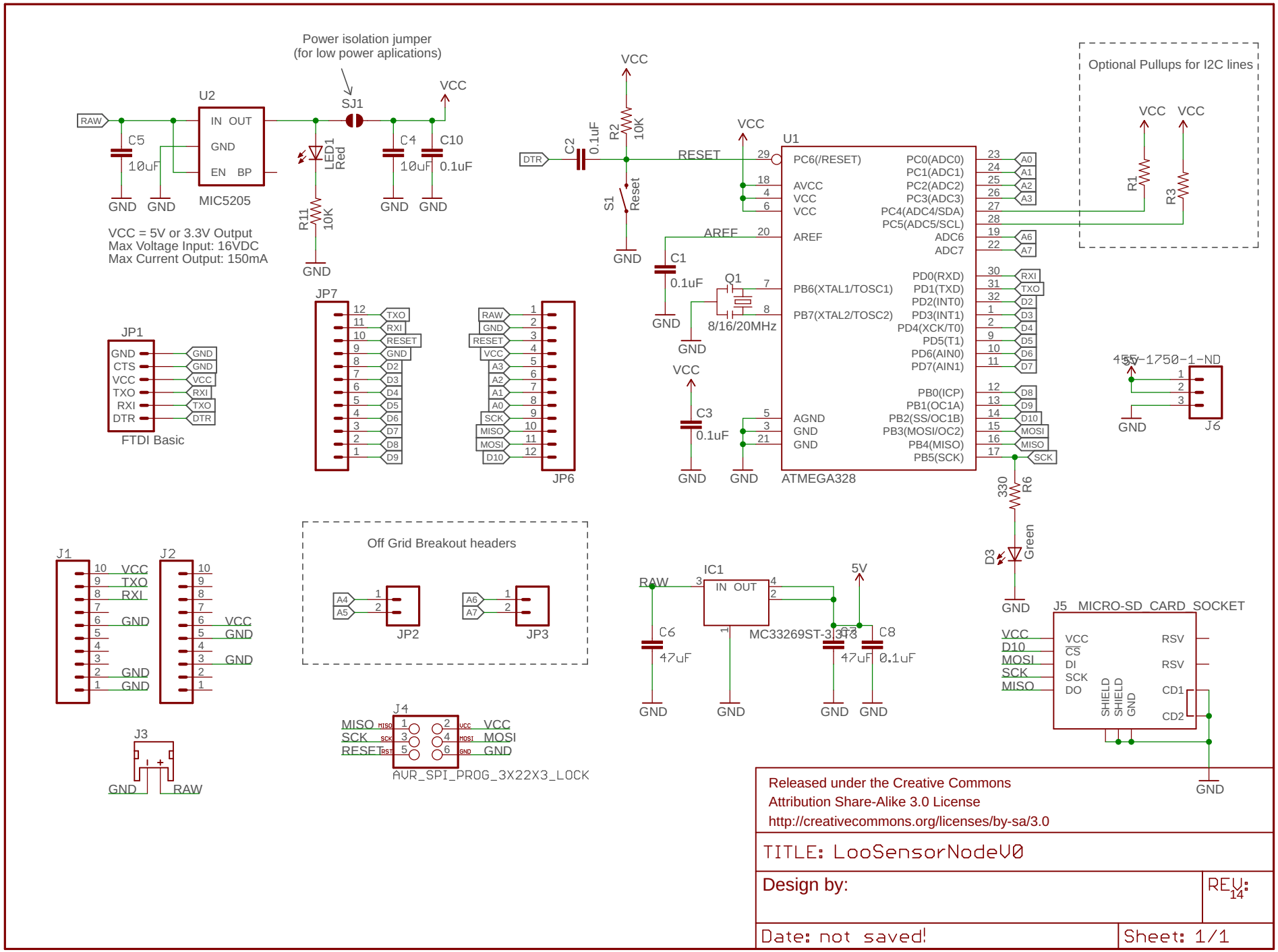

2/15/2018 11:17 AM C:\Users\ngbra\Documents\eagle\Loo\Arduino-Pro-Mini\LooSensorNodeV0.sch (Sheet: 1/1)