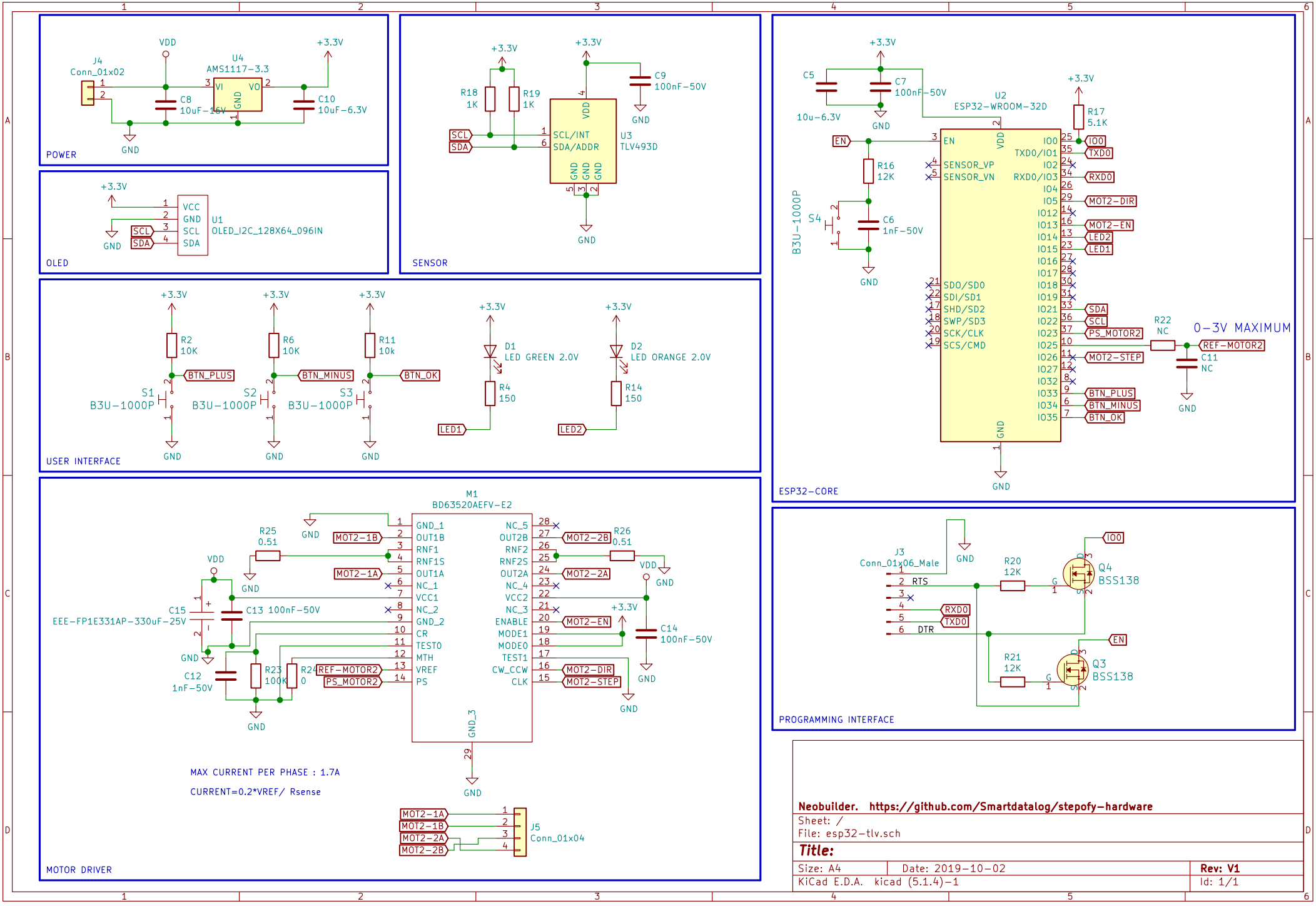

Neobuilder. https://github.com/Smartdatalog/stepofy-hardware

Sheet: /

File: esp32-tlv.sch

Title:

Size: A4	Date: 2019-10-02	**Rev: V1**
KiCad E.D.A. kicad (5.1.4)-1		Id: 1/1