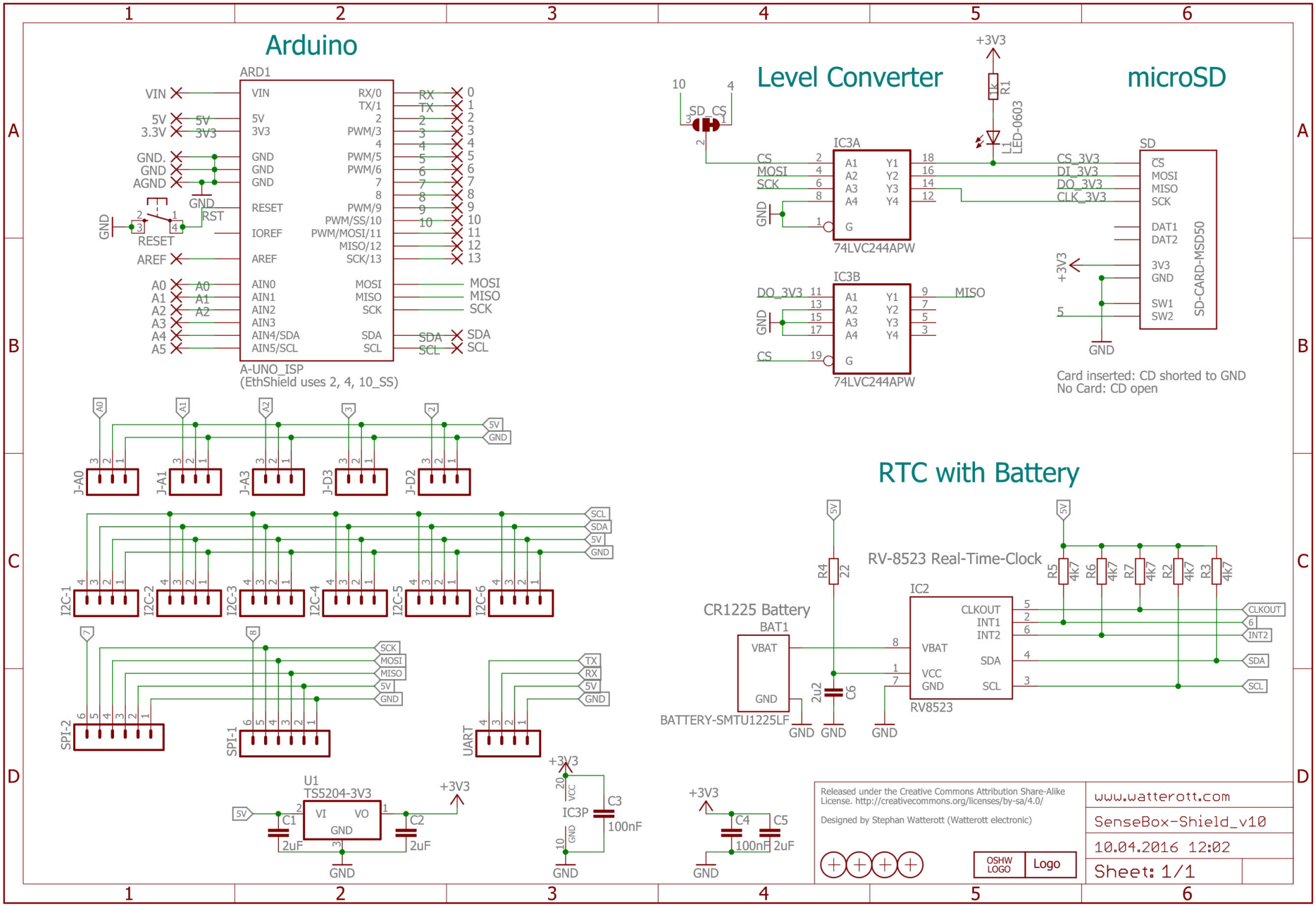
Arduino
ARD1
VIN
5V
3.3V
GND.
GND
AGND
RESET
AREF
A0
A1
A2
A3
A4
A5
RX/0
TX/1
PWM/3
PWM/5
PWM/6
PWM/9
PWM/SS/10
PWM/MOSI/11
MISO/12
SCK/13
AIN0
AIN1
AIN2
AIN3
AIN4/SDA
AIN5/SCL
IOREF
A-UNO_ISP
(EthShield uses 2, 4, 10_SS)
Level Converter
SD_CS
IC3A
74LVC244APW
IC3B
DO_3V3
CS
MOSI
SCK
MISO
+3V3
1k
R1
L1
LED-0603
microSD
SD
CS_3V3
DI_3V3
DO_3V3
CLK_3V3
DAT1
DAT2
3V3
SW1
SW2
SD-CARD-MSD50
Card inserted: CD shorted to GND
No Card: CD open
J-A0
J-A1
J-A3
J-D3
J-D2
I2C-1
I2C-2
I2C-3
I2C-4
I2C-5
I2C-6
SPI-2
SPI-1
UART
TX
RX
U1
TS5204-3V3
VI
VO
C1
2uF
C2
2uF
IC3P
C3
100nF
C4
100nF
C5
2uF
RTC with Battery
CR1225 Battery
BAT1
VBAT
GND
BATTERY-SMTU1225LF
R4
22
2u2
C6
RV-8523 Real-Time-Clock
IC2
CLKOUT
INT1
INT2
SDA
SCL
VCC
RV8523
R5
4k7
R6
4k7
R7
4k7
R2
4k7
R3
4k7
Released under the Creative Commons Attribution Share-Alike License. http://creativecommons.org/licenses/by-sa/4.0/
Designed by Stephan Watterott (Watterott electronic)
OSHW LOGO
Logo
www.watterott.com
SenseBox-Shield_v10
10.04.2016 12:02
Sheet: 1/1