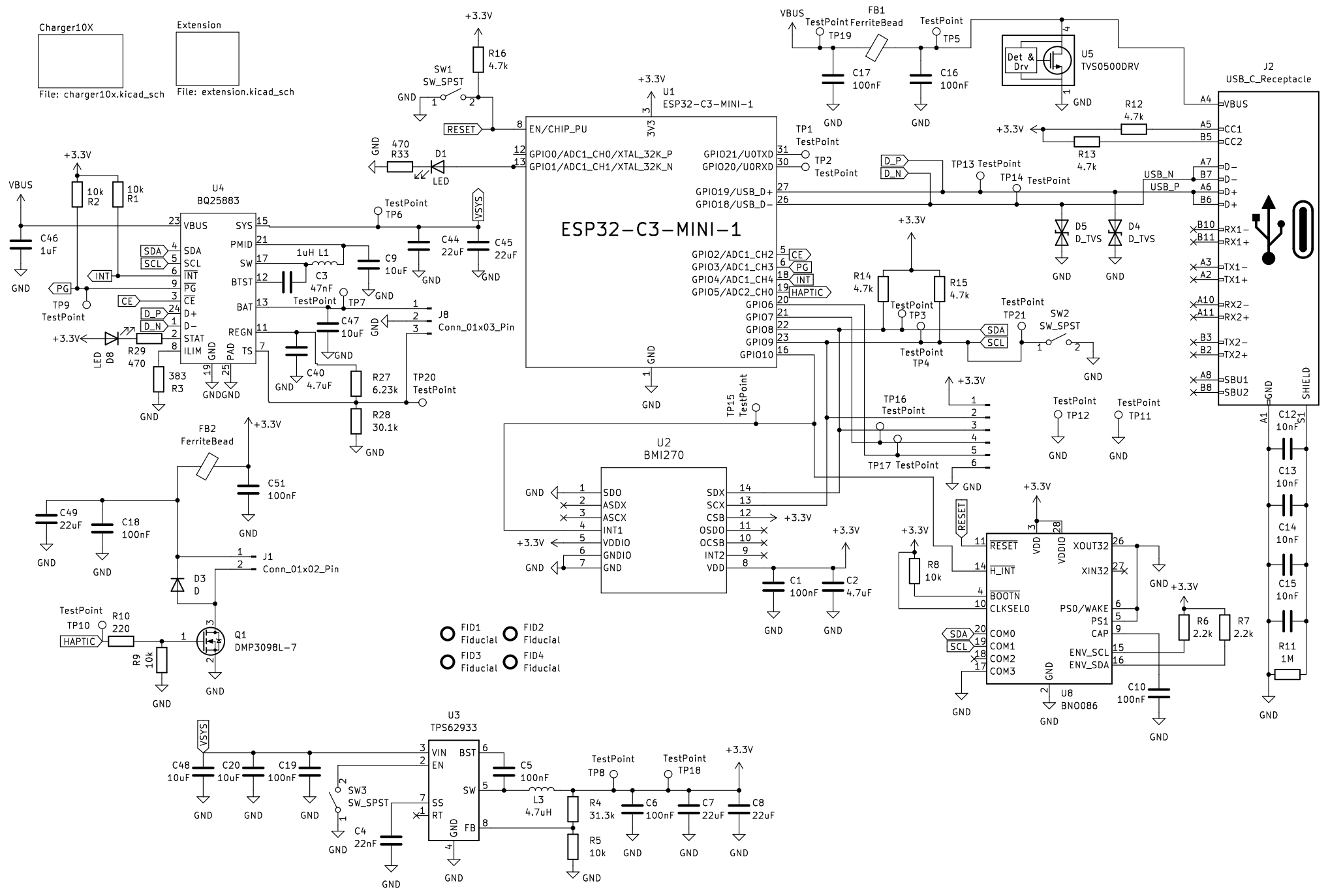
Charger10X
File: charger10x.kicad_sch
Extension
File: extension.kicad_sch
U1
ESP32-C3-MINI-1
EN/CHIP_PU
GPIO0/ADC1_CH0/XTAL_32K_P
GPIO1/ADC1_CH1/XTAL_32K_N
GPIO21/U0TXD
GPIO20/U0RXD
GPIO19/USB_D+
GPIO18/USB_D-
GPIO2/ADC1_CH2
GPIO3/ADC1_CH3
GPIO4/ADC1_CH4
GPIO5/ADC2_CH0
GPIO6
GPIO7
GPIO8
GPIO9
GPIO10
3V3
U4
BQ25883
VBUS
SDA
SCL
INT
PG
CE
D_P
D_N
STAT
ILIM
SYS
PMID
SW
BTST
BAT
REGN
TS
PAD
U2
BMI270
SDO
ASDX
ASCX
INT1
VDDIO
GNDIO
GND
SDX
SCX
CSB
OSDO
OCSB
INT2
VDD
U3
TPS62933
VIN
EN
SS
RT
BST
SW
FB
U5
TVS0500DRV
Det & Drv
J2
USB_C_Receptacle
VBUS
CC1
CC2
D-
D+
RX1-
RX1+
TX1-
TX1+
RX2-
RX2+
TX2-
TX2+
SBU1
SBU2
SHIELD
U8
BNO086
RESET
H_INT
BOOTN
CLKSEL0
XOUT32
XIN32
PS0/WAKE
PS1
CAP
COM0
COM1
COM2
COM3
ENV_SCL
ENV_SDA
Q1
DMP3098L-7
FB1
FerriteBead
FB2
FerriteBead
D1
LED
D8
LED
D5
D_TVS
D4
D_TVS
D3
D
J8
Conn_01x03_Pin
J1
Conn_01x02_Pin
FID1
Fiducial
FID2
Fiducial
FID3
Fiducial
FID4
Fiducial
+3.3V
VSYS
GND

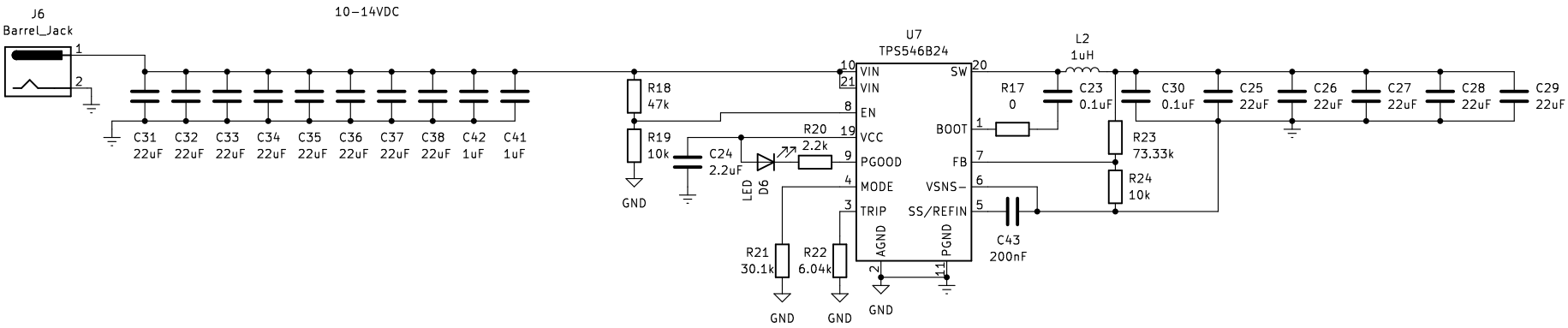
J6
Barrel_Jack
1
2
10-14VDC
C31 22uF
C32 22uF
C33 22uF
C34 22uF
C35 22uF
C36 22uF
C37 22uF
C38 22uF
C42 1uF
C41 1uF
R18 47k
R19 10k
GND
C24 2.2uF
R20 2.2k
LED D6
R21 30.1k
R22 6.04k
GND
GND
U7
TPS546B24
10 VIN
21 VIN
8 EN
19 VCC
9 PGOOD
4 MODE
3 TRIP
2 AGND
11 PGND
20 SW
1 BOOT
7 FB
6 VSNS-
5 SS/REFIN
GND
R17 0
L2 1uH
C23 0.1uF
C43 200nF
R23 73.33k
R24 10k
C30 0.1uF
C25 22uF
C26 22uF
C27 22uF
C28 22uF
C29 22uF

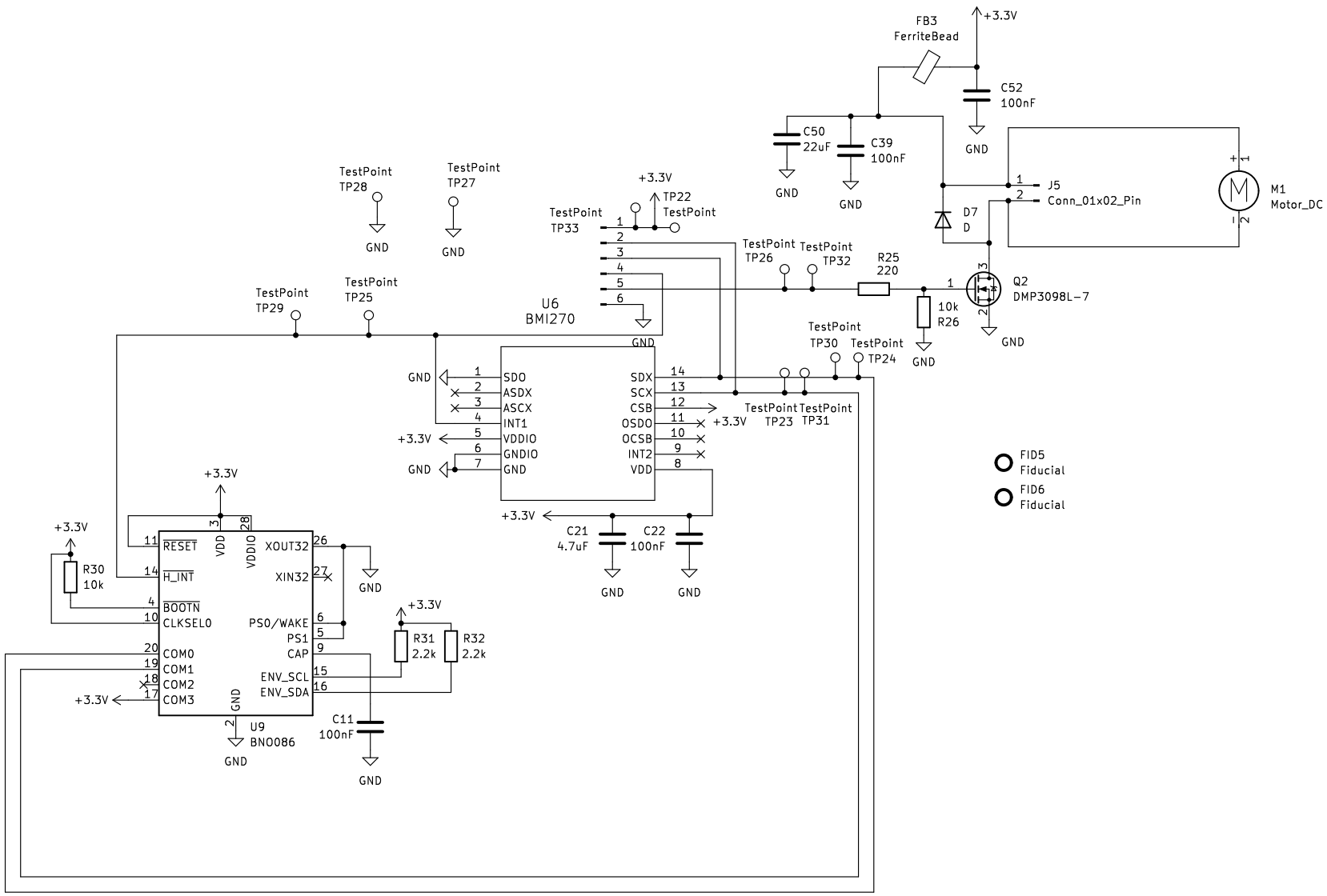
FB3
FerriteBead
+3.3V
C52
100nF
GND
C50
22uF
C39
100nF
J5
Conn_01x02_Pin
M1
Motor_DC
D7
D
Q2
DMP3098L-7
R25
220
10k
R26
TestPoint
TP28
TP27
TP22
TP33
TP26
TP32
TP29
TP25
TP30
TP24
TP23
TP31
U6
BMI270
SDO
ASDX
ASCX
INT1
VDDIO
GNDIO
GND
SDX
SCX
CSB
OSDO
OCSB
INT2
VDD
C21
4.7uF
C22
100nF
FID5
Fiducial
FID6
Fiducial
R30
10k
RESET
H_INT
BOOTN
CLKSEL0
COM0
COM1
COM2
COM3
VDD
VDDIO
XOUT32
XIN32
PS0/WAKE
PS1
CAP
ENV_SCL
ENV_SDA
U9
BNO086
R31
2.2k
R32
2.2k
C11
100nF