1 开关站基本参数

标准		GB/T 3906
系统		6kV / 50Hz
额定电压		7.2kV
工频耐压		30
雷电冲击耐压		60kV
主母线电流:		3150A
主母线类型		D type CU
额定短时耐受电流		31.5kA / 4s
额定峰值耐受电流		80kA
内部燃弧等级		IAC AFLR 31.5kA / 1s
柜型		UniGear ZS1
壳体防护等级		IP41
隔室间防护等级		IP2X
相序		A-B-C
相序颜色		黄-绿-红 / 3XAA009860P0001
表面喷漆		RAL 7035 门板和端盖板
接地铜排		Cu 30X8mm²
一次电缆进线	底部进线	标准电缆拼板及电缆夹
控制电缆进线	底部进线	标准

2 铭牌

柜体及低压箱设备铭牌语言	中文
柜体及低压箱设备铭牌颜色	白底红字
柜体及低压箱设备铭牌材质	ABS
柜体铭牌安装方式	粘贴安装
低压室门板设备铭牌安装方式	粘贴安装
低压室内部设备铭牌安装方式	粘贴安装
柜体参数铭牌及其他标签语言	中文

3 辅助电源

控制与信号回路 电压等级1	220VDC
控制与信号回路 电压等级2	NO
断路器储能马达电源	220VDC
加热&照明回路 电压等级3	220VAC, 50Hz

4 二次导线参数

			Ve+/ L	Ve-/ N
电源回路 电压等级 1	220VDC	6mm²	黑色	黑色
控制及其他回路 电压等级 1	220VDC	1.5mm²	黑色	黑色
电源回路 电压等级 2	NO	不适用	不适用	不适用
控制及其他回路 电压等级 2	NO	不适用	不适用	不适用
电源回路 电压等级 3	220VAC, 50Hz	6mm²	黑色	黑色
控制及其他回路 电压等级 3	220VAC, 50Hz	1.5mm²	黑色	黑色
			L1-L2-L3-N	
电流回路		2.5mm²	黑色	
电压回路		1.5mm²	黑色	
二次回路接地线		2.5mm²	黄绿色	
零序电流回路		2.5mm²	黑色	
设备自带线保留原设备线色线径（例如：小车内部接线）				
材料		普通PVC导线		
电压等级		标准 0.45/0.75 kV		
温度		标准		

5 其他

低压室高度	705mm
端子	瑞联
模拟纸	模拟纸带位置指示器（LV DOOR）
零序CT安装位置	柜内安装
	不适用
柜间线	BB/BC图
号码管	白色 对侧端子号
区域通用要求	不适用

6 检验

局放试验	不适用
FAT	标准FAT

7 包装和发运

中纤板或胶合板，内衬塑料袋包装

注： 主母线额定电流和低压室高度是站级层级的属性，其他属性为项目层级。

This drawing and information contained thereon is the property of ABB (XIAMEN) Switchgear CO. LTD. and shall not be used, reproduced for any purpose ,or shown to third parties without the written consent of ABB (XIAMEN) Switchgear CO. LTD.

REV.	DESCRIPTION	REV. DATE

DRAWN	XINYU LIU	TITLE	技术参数表
CHECKED	Jianjun-Wang		
APPROVED	Yongsheng.Li	CONTRACT NO.:	504485024
FIRST DATE	2025/4/28		

FUNCTION: 6kV系统

PROJECT: 天津渤化永利丁辛醇项目

=	SHEET NO 1
SCALE 1:1	TOTAL PAGES 1
DRAWING NO	XZS1-48353-A01-DS

柜型:	UniGear ZS1
额定电压/系统电压:	7.2kV /6kV
绝缘水平:	30 / 60kV
主母线电流:	3150A
额定频率:	50Hz
主母线类型:	D type CU
控制电源:	220VDC
加热及照明回路电源:	220VAC, 50Hz
储能马达电源:	220VDC
防护等级:	IP41
海拔:	<=1000 m

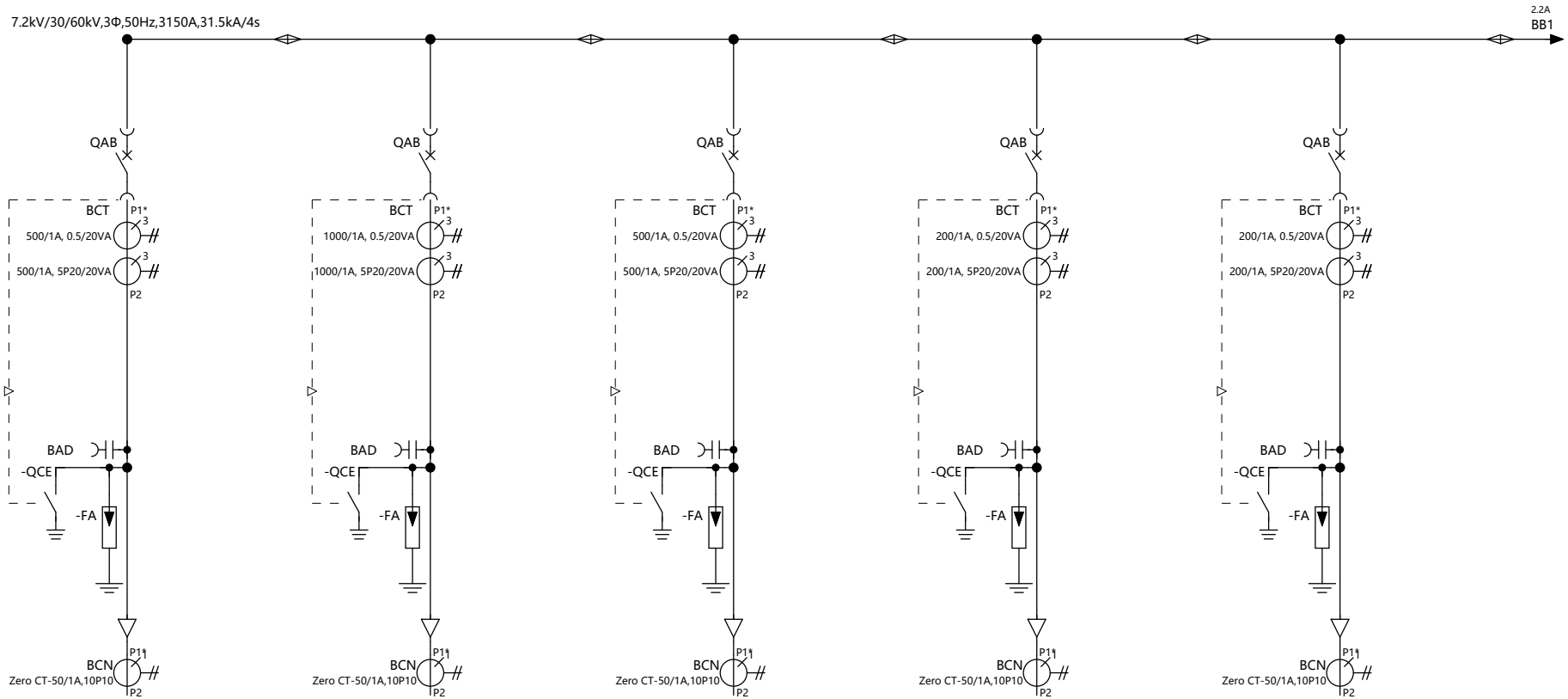

柜体名称	1AH21 变压器备用	1AH20 6-I段电容补偿	1AH19 馈电备用	1AH18 电机备用	1AH17 电机备用
二次图纸	A01\FT1	A01\FC1	A01\FM2	A01\FM1_3	A01\FM1_3
测量仪表	1*RISL-E96;1*DSZ178	1*RISL-E96	1*RISL-E96;1*DSZ178	1*RISL-E96;1*DSZ178	1*RISL-E96;1*DSZ178
变送器				1 *50-AT-1	1 *50-AT-1
开关柜尺寸(宽X高X深)	650 mm X 2533mm X 1310 mm	650 mm X 2533mm X 1310 mm	650 mm X 2533mm X 1310 mm	650 mm X 2533mm X 1310 mm	650 mm X 2533mm X 1310 mm
智能传感器	MT585,CBx6, BBx3, CAx3	MT585,CBx6, BBx3, CAx3	MT585,CBx6, BBx3, CAx3	MT585,CBx6, BBx3, CAx3	MT585,CBx6, BBx3, CAx3
保护继电器	CSD-241A-G	CSD-221A-G	CSD-211A-G	CSD-237A-G	CSD-237A-G
VT消谐方式	---	---	---	---	---
主开关	VD4/P 12.12.32 P150	VD4/P 12.12.32 P150	VD4/P 12.12.32 P150	VD4/P 12.12.32 P150	VD4/P 12.12.32 P150
避雷器	3*YH5WZ-10/27_400;DJS-II/C	3*YH5WR-10/27_400;DJS-II/C	3*YH5WZ-10/27_400;DJS-II/C	3*YH2.5WD-8/18.7_400;DJS-II/C	3*YH2.5WD-8/18.7_400;DJS-II/C
相序	A-B-C	A-B-C	A-B-C	A-B-C	A-B-C
电缆根数		1x3x185			
备注	---	---	---	---	---
ABB 柜号（内部使用）	L01	L02	L03	L04	L05

This drawing and information contained thereon is the property of ABB (XIAMEN) Switchgear CO. LTD. and shall not be used, reproduced for any purpose, or shown to third parties without the written consent of ABB (XIAMEN) Switchgear CO. LTD.

REV.	DESCRIPTION	REV. DATE

DRAWN	XINYU LIU	TITLE	单线图
CHECKED	Jianjun-Wang		
APPROVED	Yongsheng.Li	CONTRACT NO.:	504485024
FIRST DATE	2025/4/28		

FUNCTION: 6kV系统

PROJECT: 天津渤化永利丁辛醇项目

SCALE 1:1 | SHEET NO 1 | TOTAL PAGES 10

DRAWING NO XZS1-48353-A01-SLD

柜型:	UniGear ZS1
额定电压/系统电压:	7.2kV /6kV
绝缘水平:	30 / 60kV
主母线电流:	3150A
额定频率:	50Hz
主母线类型:	D type CU
控制电源:	220VDC
加热及照明回路电源:	220VAC, 50Hz
储能马达电源:	220VDC
防护等级:	IP41
海拔:	<=1000 m

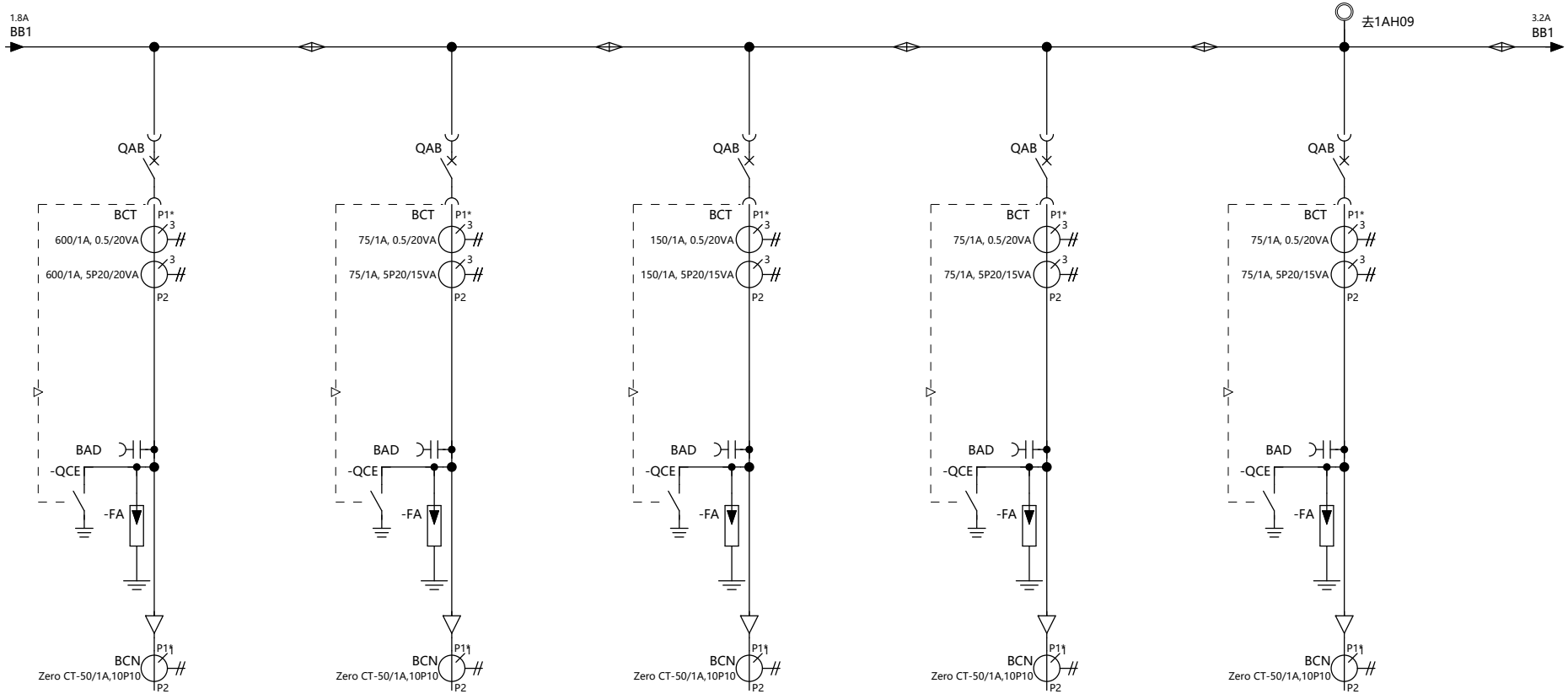

柜体名称	1AH16 辛烯醛气相加氢压缩机变频器	1AH15 分离器压缩机变频器	1AH14 1号超能混合系统	1AH13 电机备用	1AH12 2号反应器循环泵
二次图纸	A01\FM4	A01\FM4_2	A01\FM1	A01\FM1_1	A01\FM3
测量仪表	1*RISL-E96;1*DSZ178	1*RISL-E96;1*DSZ178	1*RISL-E96;1*DSZ178	1*RISL-E96;1*DSZ178	1*RISL-E96;1*DSZ178
变送器	1 *50-AT-1	1 *50-AT-1	1 *50-AT-1	1 *50-AT-1	1 *50-AT-1
开关柜尺寸(宽X高X深)	650 mm X 2533mm X 1310 mm	650 mm X 2533mm X 1310 mm	650 mm X 2533mm X 1310 mm	650 mm X 2733mm X 1310 mm	800 mm X 2733mm X 1310 mm
智能传感器	MT585,CBx6, BBx3, CAx3	MT585,CBx6, BBx3, CAx3	MT585,CBx6, BBx3, CAx3	MT585,CBx6, BBx3, CAx3	MT585,CBx6, BBx3, CAx3
保护继电器	CSD-237A-G	CSD-237A-G	CSD-237A-G	CSD-237A-G	CSD-237A-G
VT消谐方式	---	---	---	---	---
主开关	VD4/P 12.12.32 P150	VD4/P 12.12.32 P150	VD4/P 12.12.32 P150	VD4/P 12.12.32 P150	VD4/P 12.12.32 P210
避雷器	3*YH5WZ-10/27_400;DJS-II/C	3*YH5WZ-10/27_400;DJS-II/C	3*YH2.5WD-8/18.7_400;DJS-II/C	3*YH2.5WD-8/18.7_400;DJS-II/C	3*YH2.5WD-8/18.7_400;DJS-II/C
相序	A-B-C	A-B-C	A-B-C	A-B-C	A-B-C
电缆根数	1x3x185	1x3x95	1x3x95	1x3x95	1x3x95
备注	---	---	---	---	---
ABB 柜号（内部使用）	L06	L07	L08	L09	L10

This drawing and information contained thereon is the property of ABB (XIAMEN) Switchgear CO. LTD. and shall not be used, reproduced for any purpose, or shown to third parties without the written consent of ABB (XIAMEN) Switchgear CO. LTD.

REV.	DESCRIPTION	REV. DATE

DRAWN	XINYU LIU	TITLE	单线图
CHECKED	Jianjun-Wang		
APPROVED	Yongsheng.Li	CONTRACT NO.:	504485024
FIRST DATE	2025/4/28		

FUNCTION: 6kV系统

PROJECT: 天津渤化永利丁辛醇项目

=	SHEET NO 2
SCALE 1:1	TOTAL PAGES 10
DRAWING NO	XZS1-48353-A01-SLD

柜型:	UniGear ZS1
额定电压/系统电压:	7.2kV /6kV
绝缘水平:	30 / 60kV
主母线电流:	3150A
额定频率:	50Hz
主母线类型:	D type CU
控制电源:	220VDC
加热及照明回路电源:	220VAC, 50Hz
储能马达电源:	220VDC
防护等级:	IP41
海拔:	<=1000 m

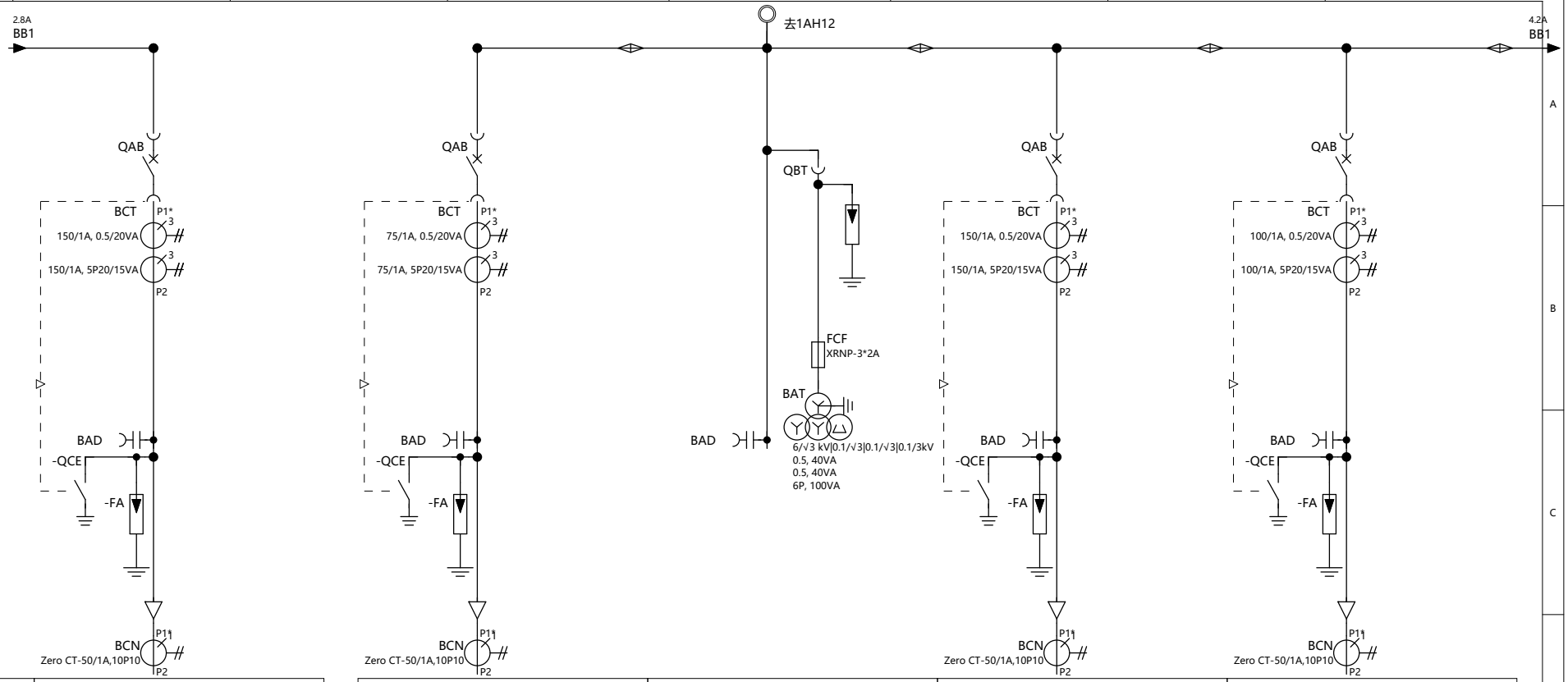

柜体名称	1AH11 1号反应器循环泵	1AH10 1#羰基合成反应器搅拌器（二期）	1AH09 6kVPT柜	1AH08 丁醛气相加氢压缩机（二期）	1AH07 1号反应器循环泵（二期）
二次图纸	A01\FM1	A01\FM1_1	A01\P1	A01\FM1	A01\FM1_2
测量仪表	1*RISL-E96;1*DSZ178	1*RISL-E96;1*DSZ178	1*V(Vs)	1*RISL-E96;1*DSZ178	1*RISL-E96;1*DSZ178
变送器	1 *50-AT-1	1 *50-AT-1		1 *50-AT-1	1 *50-AT-1
开关柜尺寸(宽X高X深)	650 mm X 2733mm X 1310 mm	650 mm X 2733mm X 1310 mm	800 mm X 2733mm X 1310 mm	650 mm X 2733mm X 1310 mm	650 mm X 2533mm X 1310 mm
智能传感器	MT585,CBx6, BBx3, CAx3	MT585,CBx6, BBx3, CAx3	---	MT585,CBx6, BBx3, CAx3	MT585,CBx6, BBx3, CAx3
保护继电器	CSD-237A-G	CSD-237A-G	---	CSD-237A-G	CSD-237A-G
VT消谐方式	---	---	HYR-3A	---	---
主开关	VD4/P 12.12.32 P150	VD4/P 12.12.32 P150	---	VD4/P 12.12.32 P150	VD4/P 12.12.32 P150
避雷器	3*YH2.5WD-8/18.7_400;DJS-II/C	3*YH2.5WD-8/18.7_400;DJS-II/C	3*YH5WZ6-17/45;DJS-II/C	3*YH2.5WD-8/18.7_400;DJS-II/C	3*YH2.5WD-8/18.7_400;DJS-II/C
相序	A-B-C	A-B-C	A-B-C	A-B-C	A-B-C
电缆根数	1x3x95	1x3x95		1x3x95	1x3x95
备注	---	---	---	---	---
ABB 柜号（内部使用）	L11	L12	L13	L14	L15

This drawing and information contained thereon is the property of ABB (XIAMEN) Switchgear CO. LTD. and shall not be used, reproduced for any purpose, or shown to third parties without the written consent of ABB (XIAMEN) Switchgear CO. LTD.

REV.	DESCRIPTION	REV. DATE

DRAWN	XINYU LIU	TITLE	单线图
CHECKED	Jianjun-Wang		
APPROVED	Yongsheng.Li	CONTRACT NO.:	504485024
FIRST DATE	2025/4/28		

FUNCTION: 6kV系统

PROJECT: 天津渤化永利丁辛醇项目

=	SHEET NO 3
SCALE 1:1	TOTAL PAGES 10
DRAWING NO	XZS1-48353-A01-SLD

柜型:	UniGear ZS1
额定电压/系统电压:	7.2kV /6kV
绝缘水平:	30 / 60kV
主母线电流:	3150A
额定频率:	50Hz
主母线类型:	D type CU
控制电源:	220VDC
加热及照明回路电源:	220VAC, 50Hz
储能马达电源:	220VDC
防护等级:	IP41
海拔:	<=1000 m

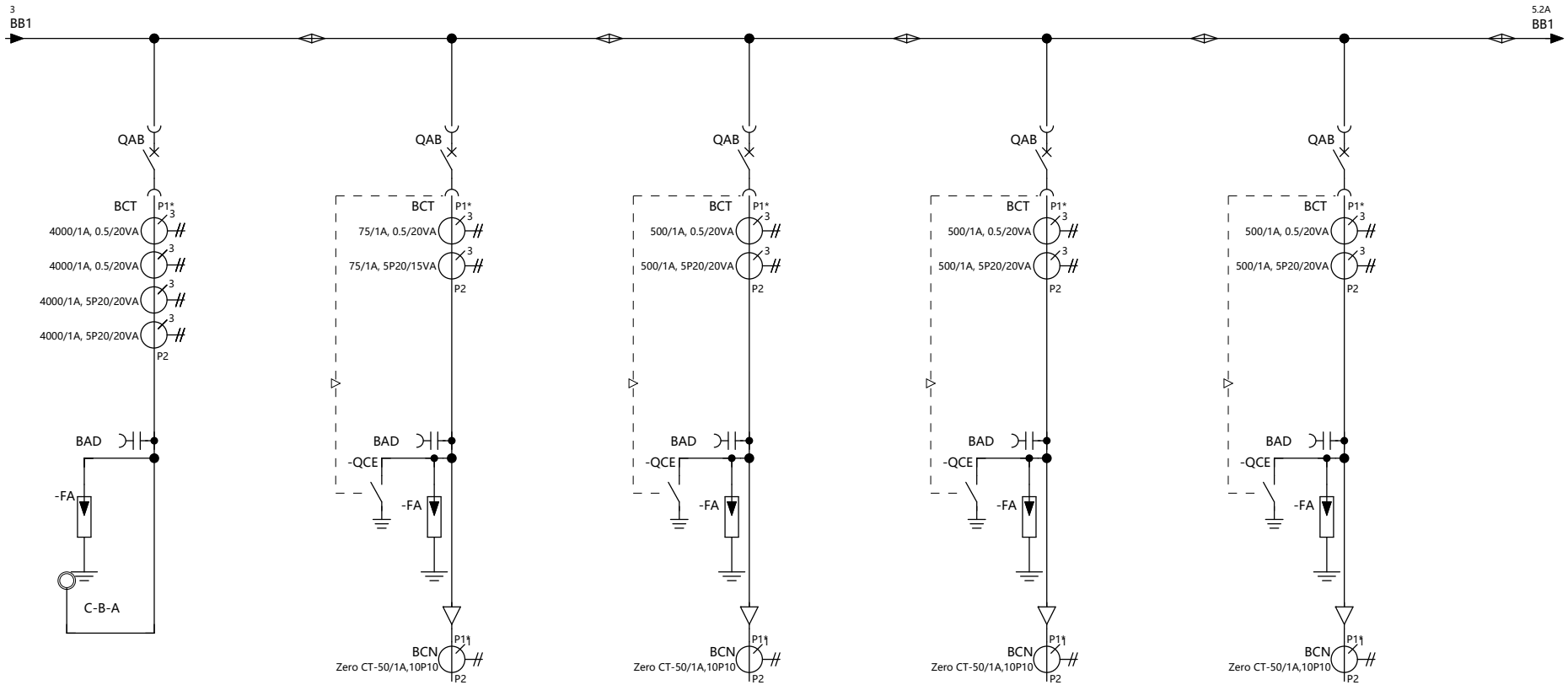

柜体名称	1AH06 1#6KV进线	1AH05 综合接地选线成套装置出线柜	1AH04 变压器备用	1AH03 白油装置1#动力变	1AH02 辛醇3#动力变
二次图纸	A01\I1	A01\FT2	A01\FT1	A01\FT1	A01\FT1
测量仪表	1*DSZ178;1*RIDIAG-V	1*RISL-E96	1*RISL-E96;1*DSZ178	1*RISL-E96;1*DSZ178	1*RISL-E96;1*DSZ178
变送器					
开关柜尺寸(宽X高X深)	1000 mm X 2533mm X 1890 mm	650 mm X 2533mm X 1310 mm	650 mm X 2533mm X 1310 mm	650 mm X 2533mm X 1310 mm	650 mm X 2533mm X 1310 mm
智能传感器	MT585,CBx6, UBBx3，LBBx3	MT585,CBx6, BBx3, CAx3	MT585,CBx6, BBx3, CAx3	MT585,CBx6, BBx3, CAx3	MT585,CBx6, BBx3, CAx3
保护继电器	保护组屏	CSD-241A-G	CSD-241A-G	CSD-241A-G	CSD-241A-G
VT消谐方式	---	---	---	---	---
主开关	VD4/P 12.32.32 P275	VD4/P 12.12.32 P150	VD4/P 12.12.32 P150	VD4/P 12.12.32 P150	VD4/P 12.12.32 P150
避雷器	3*YH5WZ-10/27_400;DJS-II/C	3*YH5WZ-10/27_400;DJS-II/C	3*YH5WZ-10/27_400;DJS-II/C	3*YH5WZ-10/27_400;DJS-II/C	3*YH5WZ-10/27_400;DJS-II/C
相序	C-B-A	A-B-C	A-B-C	A-B-C	A-B-C
电缆根数		1x3x95		1x3x120	1x3x120
备注	---	---	---	---	---
ABB 柜号（内部使用）	L16	L17	L18	L19	L20

This drawing and information contained thereon is the property of ABB (XIAMEN) Switchgear CO. LTD. and shall not be used, reproduced for any purpose, or shown to third parties without the written consent of ABB (XIAMEN) Switchgear CO. LTD.

REV.	DESCRIPTION	REV. DATE

DRAWN	XINYU LIU	TITLE	单线图
CHECKED	Jianjun-Wang		
APPROVED	Yongsheng.Li	CONTRACT NO.:	504485024
FIRST DATE	2025/4/28		

FUNCTION: 6kV系统

PROJECT: 天津渤化永利丁辛醇项目

=	SHEET NO 4
SCALE 1:1	TOTAL PAGES 10
DRAWING NO	XZS1-48353-A01-SLD

柜型:	UniGear ZS1
额定电压/系统电压:	7.2kV /6kV
绝缘水平:	30 / 60kV
主母线电流:	3150A
额定频率:	50Hz
主母线类型:	D type CU
控制电源:	220VDC
加热及照明回路电源:	220VAC, 50Hz
储能马达电源:	220VDC
防护等级:	IP41
海拔:	<=1000 m

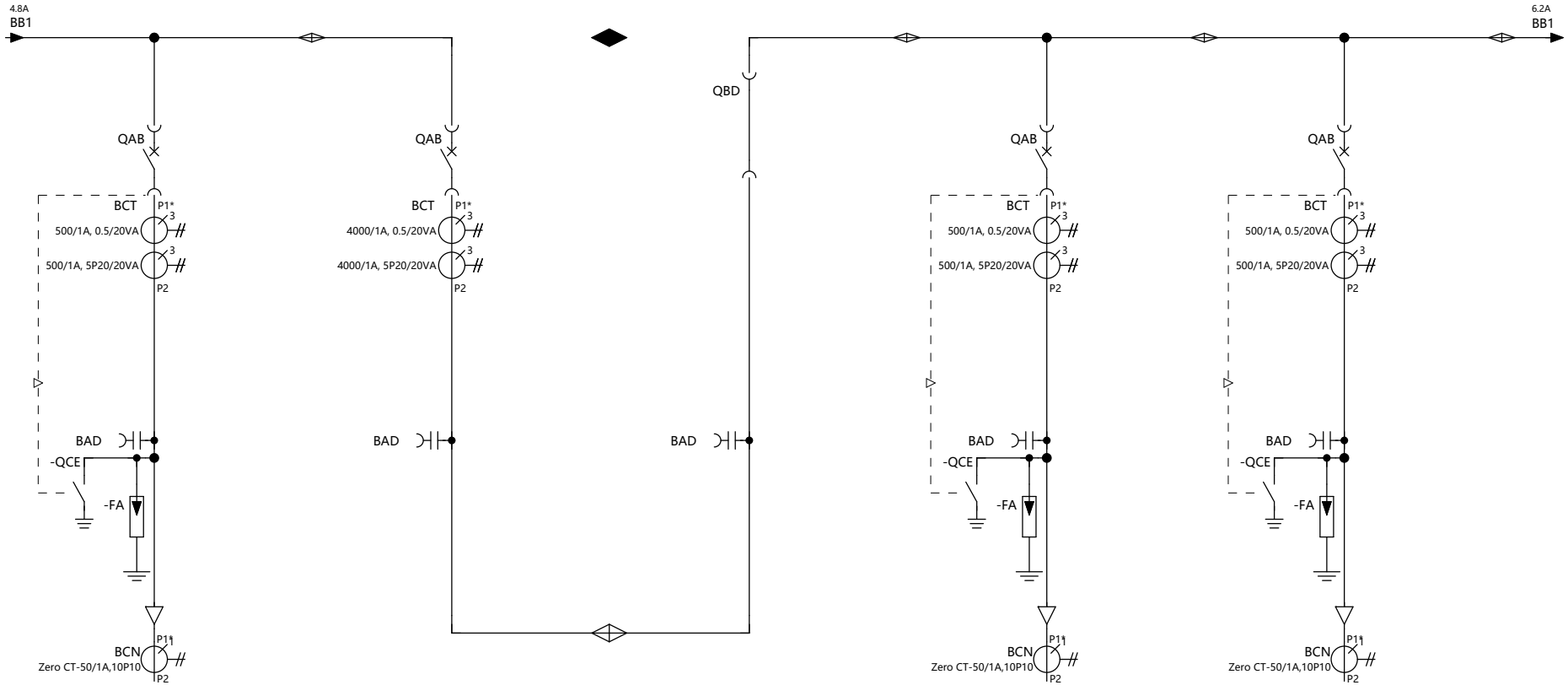

柜体名称	1AH01 辛醇1#动力变	AH0 母联	AH00 母联隔离	2AH01 辛醇2#动力变	2AH02 辛醇4#动力变
二次图纸	A01\FT1	A01\B1	A01\D1	A01\FT1	A01\FT1
测量仪表	1*RISL-E96;1*DSZ178	1*RISL-E96		1*RISL-E96;1*DSZ178	1*RISL-E96;1*DSZ178
变送器					
开关柜尺寸(宽X高X深)	650 mm X 2533mm X 1310 mm	1000 mm X 2533mm X 1390 mm	1000 mm X 2533mm X 1390 mm	650 mm X 2533mm X 1310 mm	650 mm X 2533mm X 1310 mm
智能传感器	MT585,CBx6, BBx3, CAx3	MT585,CBx6, UBBx3，LBBx3	MT585,CBx6, UBBx3，LBBx3	MT585,CBx6, BBx3, CAx3	MT585,CBx6, BBx3, CAx3
保护继电器	CSD-241A-G	CSD-215A-G	快切装置WBKQ-01C	CSD-241A-G	CSD-241A-G
VT消谐方式	---	---	---	---	---
主开关	VD4/P 12.12.32 P150	VD4/P 12.32.32 P275	IT 1231-50 P275 (Parameter can cover <=50kA)	VD4/P 12.12.32 P150	VD4/P 12.12.32 P150
避雷器	3*YH5WZ-10/27_400;DJS-II/C	---	---	3*YH5WZ-10/27_400;DJS-II/C	3*YH5WZ-10/27_400;DJS-II/C
相序	A-B-C	A-B-C	A-B-C	A-B-C	A-B-C
电缆根数	1x3x120			1x3x120	1x3x120
备注	---	---	---	---	---
ABB 柜号（内部使用）	L21	L22	L23	L24	L25

This drawing and information contained thereon is the property of ABB (XIAMEN) Switchgear CO. LTD. and shall not be used, reproduced for any purpose, or shown to third parties without the written consent of ABB (XIAMEN) Switchgear CO. LTD.

REV.	DESCRIPTION	REV. DATE

DRAWN	XINYU LIU	TITLE	单线图
CHECKED	Jianjun-Wang		
APPROVED	Yongsheng.Li	CONTRACT NO.:	504485024
FIRST DATE	2025/4/28		

FUNCTION: 6kV系统

PROJECT: 天津渤化永利丁辛醇项目

=	SHEET NO 5
SCALE 1:1	TOTAL PAGES 10
DRAWING NO	XZS1-48353-A01-SLD

柜型:	UniGear ZS1
额定电压/系统电压:	7.2kV /6kV
绝缘水平:	30 / 60kV
主母线电流:	3150A
额定频率:	50Hz
主母线类型:	D type CU
控制电源:	220VDC
加热及照明回路电源:	220VAC, 50Hz
储能马达电源:	220VDC
防护等级:	IP41
海拔:	<=1000 m

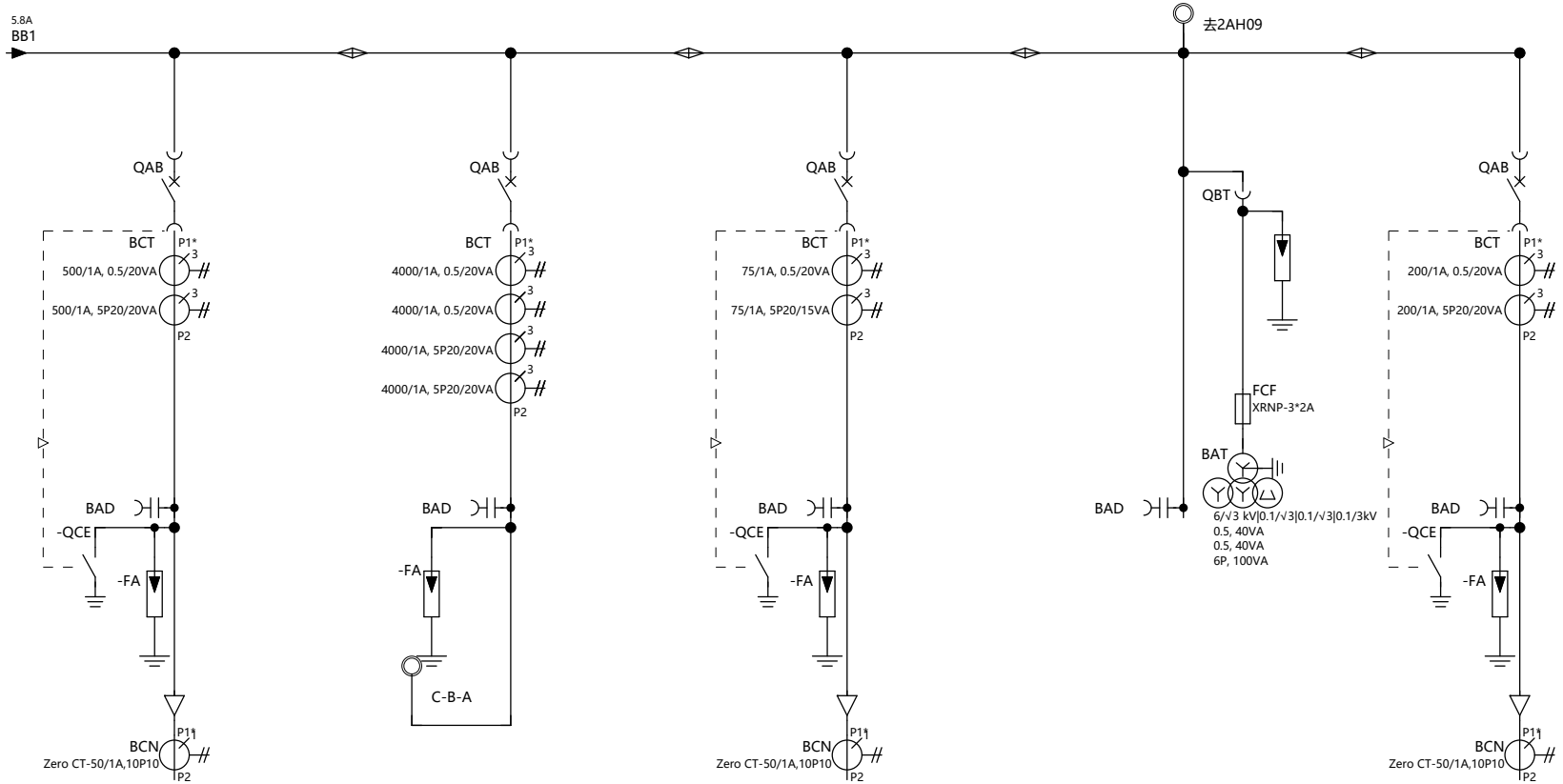

柜体名称	2AH03 白油装置2#动力变	2AH04 2#6KV进线	2AH05 综合接地选线成套装置出线柜	2AH06 母线PT	2AH07 辛烯醛气相加氢压缩机（二期）
二次图纸	A01\FT1	A01\I1	A01\FT2	A01\P1	A01\FM1_3
测量仪表	1*RISL-E96;1*DSZ178	1*DSZ178;1*RIDIAG-V	1*RISL-E96	1*V(s)	1*RISL-E96;1*DSZ178
变送器					1 *50-AT-1
开关柜尺寸(宽X高X深)	650 mm X 2533mm X 1310 mm	1000 mm X 2533mm X 1890 mm	650 mm X 2733mm X 1310 mm	800 mm X 2733mm X 1310 mm	650 mm X 2733mm X 1310 mm
智能传感器	MT585,CBx6, BBx3, CAx3	MT585,CBx6, UBBx3，LBBx3	MT585,CBx6, BBx3, CAx3	---	MT585,CBx6, BBx3, CAx3
保护继电器	CSD-241A-G	保护组屏	CSD-241A-G	---	CSD-237A-G
VT消谐方式	---	---	---	HYR-3A	---
主开关	VD4/P 12.12.32 P150	VD4/P 12.32.32 P275	VD4/P 12.12.32 P150	---	VD4/P 12.12.32 P150
避雷器	3*YH5WZ-10/27_400;DJS-II/C	3*YH5WZ-10/27_400;DJS-II/C	3*YH5WZ-10/27_400;DJS-II/C	3*YH5WZ6-17/45;DJS-II/C	3*YH2.5WD-8/18.7_400;DJS-II/C
相序	A-B-C	C-B-A	A-B-C	A-B-C	A-B-C
电缆根数	1x3x120		1x3x95		1x3x95
备注	---	---	---	---	---
ABB 柜号（内部使用）	L26	L27	L28	L29	L30

This drawing and information contained thereon is the property of ABB (XIAMEN) Switchgear CO. LTD. and shall not be used, reproduced for any purpose ,or shown to third parties without the written consent of ABB (XIAMEN) Switchgear CO. LTD.

REV.	DESCRIPTION	REV. DATE

DRAWN	XINYU LIU	TITLE	单线图
CHECKED	Jianjun-Wang		
APPROVED	Yongsheng.Li	CONTRACT NO.:	504485024
FIRST DATE	2025/4/28		

FUNCTION: 6kV系统

PROJECT: 天津渤化永利丁辛醇项目

=	SHEET NO 6
SCALE 1:1	TOTAL PAGES 10
DRAWING NO	XZS1-48353-A01-SLD

柜型:	UniGear ZS1
额定电压/系统电压:	7.2kV /6kV
绝缘水平:	30 / 60kV
主母线电流:	3150A
额定频率:	50Hz
主母线类型:	D type CU
控制电源:	220VDC
加热及照明回路电源:	220VAC, 50Hz
储能马达电源:	220VDC
防护等级:	IP41
海拔:	<=1000 m

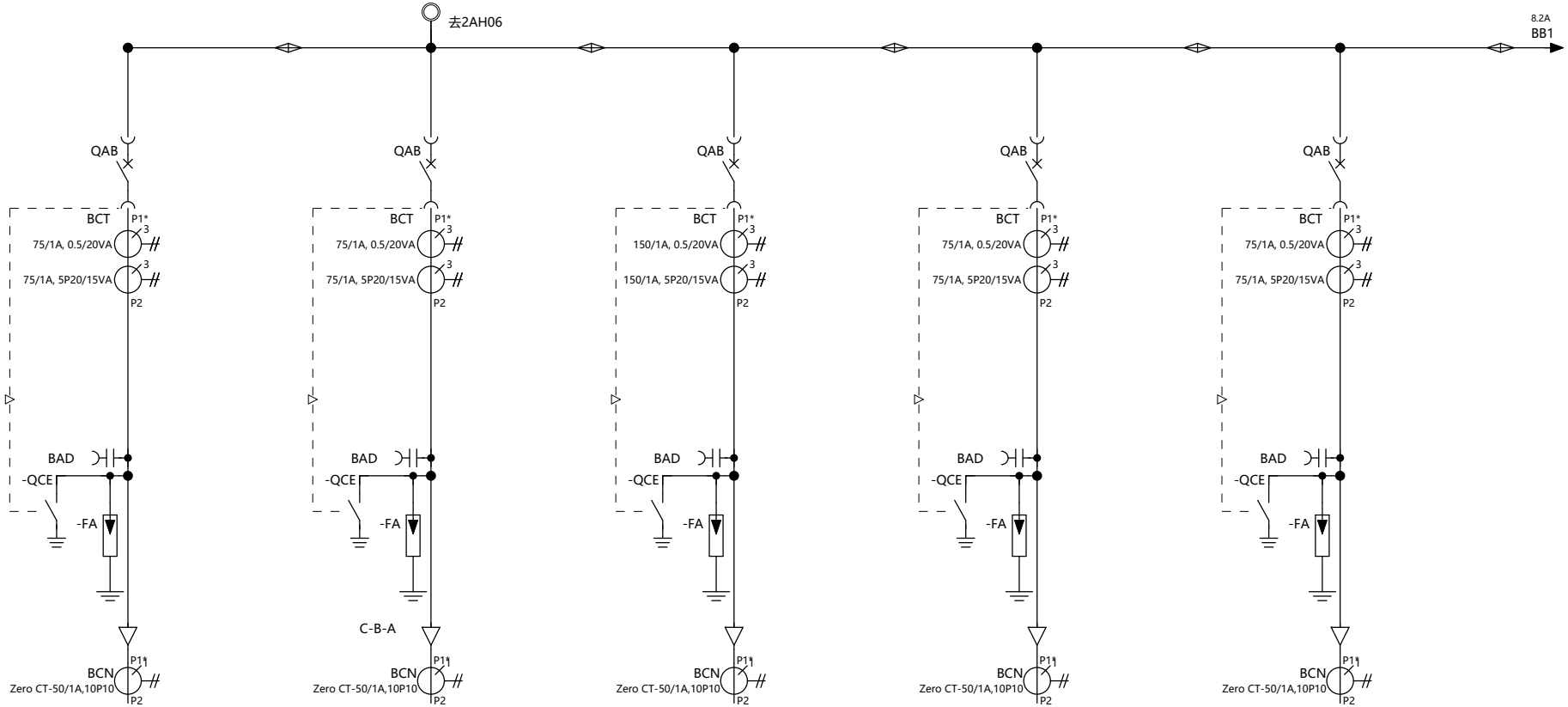

柜体名称	2AH08 1号反应器循环泵（二期）	2AH09 2#羰基合成反应器搅拌器（二期）	2AH10 1号反应器循环泵	2AH11 2号反应器循环泵	2AH12 电机备用
二次图纸	A01\FM1_1	A01\FM3	A01\FM1	A01\FM1_1	A01\FM1_1
测量仪表	1*RISL-E96;1*DSZ178	1*RISL-E96;1*DSZ178	1*RISL-E96;1*DSZ178	1*RISL-E96;1*DSZ178	1*RISL-E96;1*DSZ178
变送器	1 *50-AT-1	1 *50-AT-1	1 *50-AT-1	1 *50-AT-1	1 *50-AT-1
开关柜尺寸(宽X高X深)	650 mm X 2733mm X 1310 mm	800 mm X 2733mm X 1310 mm	650 mm X 2733mm X 1310 mm	650 mm X 2533mm X 1310 mm	650 mm X 2533mm X 1310 mm
智能传感器	MT585,CBx6, BBx3, CAx3	MT585,CBx6, BBx3, CAx3	MT585,CBx6, BBx3, CAx3	MT585,CBx6, BBx3, CAx3	MT585,CBx6, BBx3, CAx3
保护继电器	CSD-237A-G	CSD-237A-G	CSD-237A-G	CSD-237A-G	CSD-237A-G
VT消谐方式	---	---	---	---	---
主开关	VD4/P 12.12.32 P150	VD4/P 12.12.32 P210	VD4/P 12.12.32 P150	VD4/P 12.12.32 P150	VD4/P 12.12.32 P150
避雷器	3*YH2.5WD-8/18.7_400;DJS-II/C	3*YH2.5WD-8/18.7_400;DJS-II/C	3*YH2.5WD-8/18.7_400;DJS-II/C	3*YH2.5WD-8/18.7_400;DJS-II/C	3*YH2.5WD-8/18.7_400;DJS-II/C
相序	A-B-C	C-B-A	A-B-C	A-B-C	A-B-C
电缆根数	1x3x95	1x3x95	1x3x95	1x3x95	1x3x95
备注	---	---	---	---	---
ABB 柜号（内部使用）	L31	L32	L33	L34	L35

This drawing and information contained thereon is the property of ABB (XIAMEN) Switchgear CO. LTD. and shall not be used, reproduced for any purpose, or shown to third parties without the written consent of ABB (XIAMEN) Switchgear CO. LTD.

REV.	DESCRIPTION	REV. DATE

DRAWN	XINYU LIU	TITLE	单线图
CHECKED	Jianjun-Wang		
APPROVED	Yongsheng.Li	CONTRACT NO.:	504485024
FIRST DATE	2025/4/28		

FUNCTION: 6kV系统

PROJECT: 天津渤化永利丁辛醇项目

SCALE 1:1 | SHEET NO 7 | TOTAL PAGES 10

DRAWING NO XZS1-48353-A01-SLD

柜型:	UniGear ZS1
额定电压/系统电压:	7.2kV /6kV
绝缘水平:	30 / 60kV
主母线电流:	3150A
额定频率:	50Hz
主母线类型:	D type CU
控制电源:	220VDC
加热及照明回路电源:	220VAC, 50Hz
储能马达电源:	220VDC
防护等级:	IP41
海拔:	<=1000 m

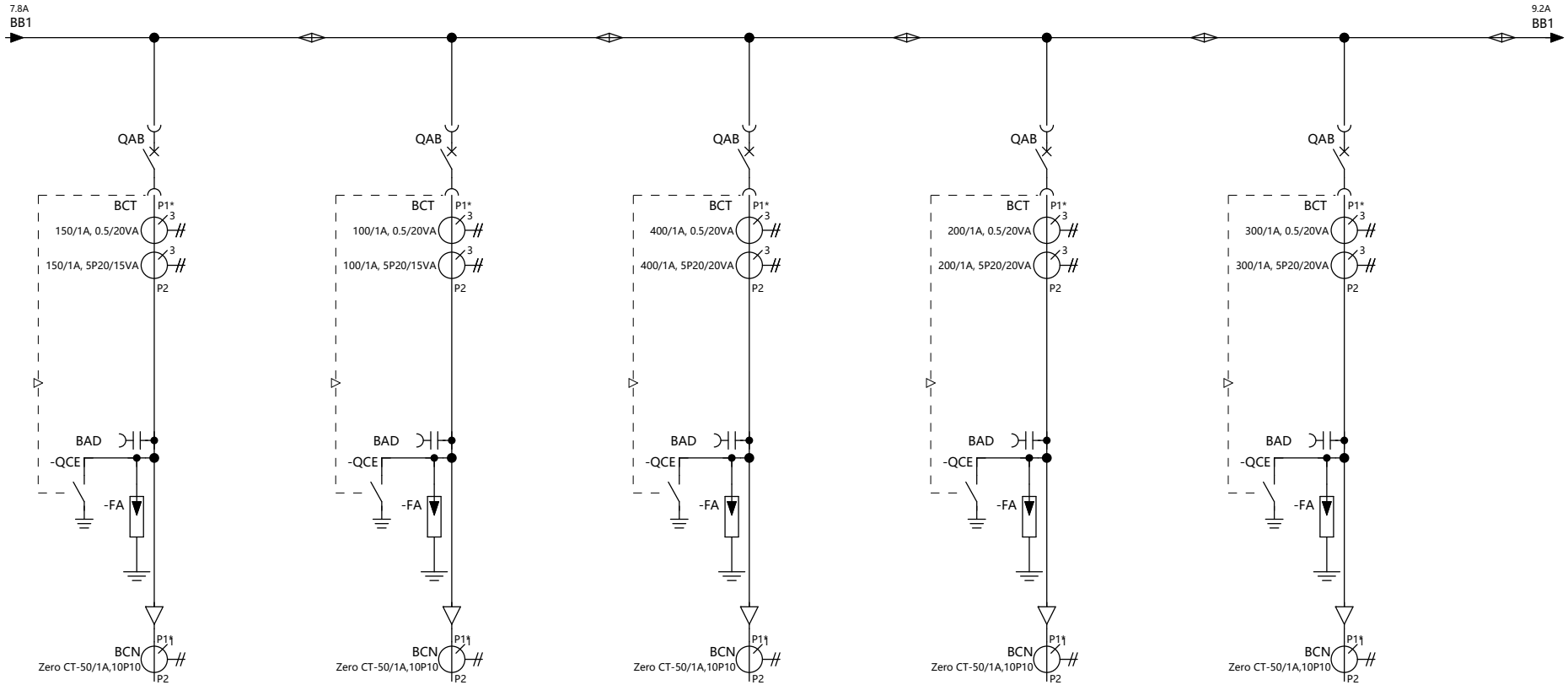

柜体名称	2AH13 2号超能混合系统	2AH14 循环气压缩机变频器	2AH15 蒸汽压缩机组变频器	2AH16 离心式解吸气压缩机变频器	2AH17 往复式解吸气压缩机
二次图纸	A01\FM1	A01\FM4_3	A01\FM4_1	A01\FM4_4	A01\FM1_4
测量仪表	1*RISL-E96;1*DSZ178	1*RISL-E96;1*DSZ178	1*RISL-E96;1*DSZ178	1*RISL-E96;1*DSZ178	1*RISL-E96;1*DSZ178
变送器	1 *50-AT-1	1 *50-AT-1	1 *50-AT-1	1 *50-AT-1	1 *50-AT-1
开关柜尺寸(宽X高X深)	650 mm X 2533mm X 1310 mm	650 mm X 2533mm X 1310 mm	650 mm X 2533mm X 1310 mm	650 mm X 2533mm X 1310 mm	650 mm X 2533mm X 1310 mm
智能传感器	MT585,CBx6, BBx3, CAx3	MT585,CBx6, BBx3, CAx3	MT585,CBx6, BBx3, CAx3	MT585,CBx6, BBx3, CAx3	MT585,CBx6, BBx3, CAx3
保护继电器	CSD-237A-G	CSD-237A-G	CSD-237A-G	CSD-237A-G	CSD-237A-G
VT消谐方式	---	---	---	---	---
主开关	VD4/P 12.12.32 P150	VD4/P 12.12.32 P150	VD4/P 12.12.32 P150	VD4/P 12.12.32 P150	VD4/P 12.12.32 P150
避雷器	3*YH2.5WD-8/18.7_400;DJS-II/C	3*YH5WZ-10/27_400;DJS-II/C	3*YH5WZ-10/27_400;DJS-II/C	3*YH5WZ-10/27_400;DJS-II/C	3*YH2.5WD-8/18.7_400;DJS-II/C
相序	A-B-C	A-B-C	A-B-C	A-B-C	A-B-C
电缆根数	1x3x95	1x3x95	1x3x120	1x3x95	1x3x95
备注	---	---	---	---	---
ABB 柜号（内部使用）	L36	L37	L38	L39	L40

This drawing and information contained thereon is the property of ABB (XIAMEN) Switchgear CO. LTD. and shall not be used, reproduced for any purpose, or shown to third parties without the written consent of ABB (XIAMEN) Switchgear CO. LTD.

REV.	DESCRIPTION	REV. DATE

DRAWN	XINYU LIU	TITLE	单线图
CHECKED	Jianjun-Wang		
APPROVED	Yongsheng.Li	CONTRACT NO.:	504485024
FIRST DATE	2025/4/28		

FUNCTION: 6kV系统

PROJECT: 天津渤化永利丁辛醇项目

=	SHEET NO 8
SCALE 1:1	TOTAL PAGES 10
DRAWING NO	XZS1-48353-A01-SLD

柜型:	UniGear ZS1
额定电压/系统电压:	7.2kV /6kV
绝缘水平:	30 / 60kV
主母线电流:	3150A
额定频率:	50Hz
主母线类型:	D type CU
控制电源:	220VDC
加热及照明回路电源:	220VAC, 50Hz
储能马达电源:	220VDC
防护等级:	IP41
海拔:	<=1000 m

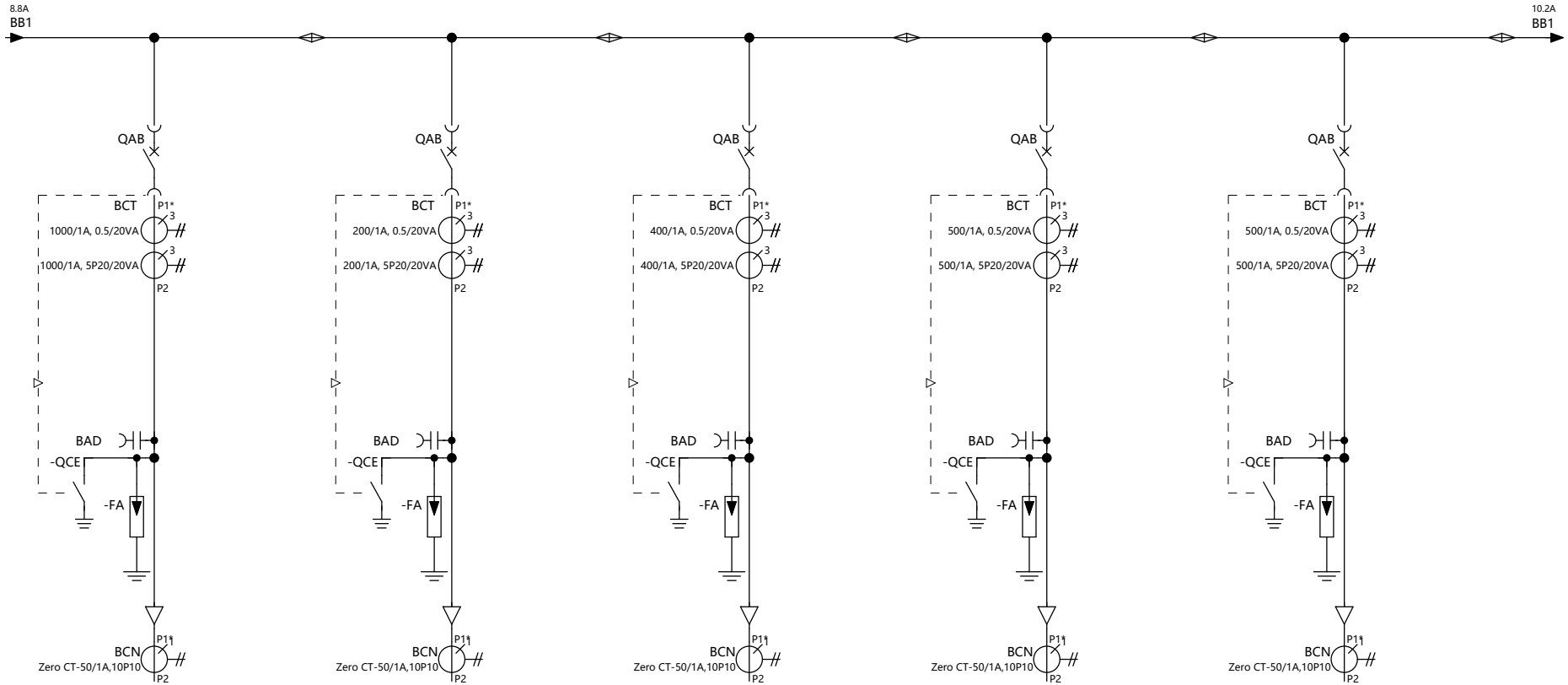

柜体名称	2AH18 6-I段电容补偿	2AH19 电机备用	2AH20 电机备用	2AH21 变压器	2AH22 变压器
二次图纸	A01\FC1	A01\FM1_3	A01\FM1_5	A01\FT1	A01\FT1
测量仪表	1*RISL-E96	1*RISL-E96;1*DSZ178	1*RISL-E96;1*DSZ178	1*RISL-E96;1*DSZ178	1*RISL-E96;1*DSZ178
变送器		1 *50-AT-1	1 *50-AT-1		
开关柜尺寸(宽X高X深)	650 mm X 2533mm X 1310 mm	650 mm X 2533mm X 1310 mm	650 mm X 2533mm X 1310 mm	650 mm X 2533mm X 1310 mm	650 mm X 2533mm X 1310 mm
智能传感器	MT585,CBx6, BBx3, CAx3	MT585,CBx6, BBx3, CAx3	MT585,CBx6, BBx3, CAx3	MT585,CBx6, BBx3, CAx3	MT585,CBx6, BBx3, CAx3
保护继电器	CSD-221A-G	CSD-237A-G	CSD-237A-G	CSD-241A-G	CSD-241A-G
VT消谐方式	---	---	---	---	---
主开关	VD4/P 12.12.32 P150	VD4/P 12.12.32 P150	VD4/P 12.12.32 P150	VD4/P 12.12.32 P150	VD4/P 12.12.32 P150
避雷器	3*YH5WR-10/27_400;DJS-II/C	3*YH2.5WD-8/18.7_400;DJS-II/C	3*YH2.5WD-8/18.7_400;DJS-II/C	3*YH5WZ-10/27_400;DJS-II/C	3*YH5WZ-10/27_400;DJS-II/C
相序	A-B-C	A-B-C	A-B-C	A-B-C	A-B-C
电缆根数	1x3x185				
备注	---	---	---	---	---
ABB 柜号（内部使用）	L41	L42	L43	L44	L45

This drawing and information contained thereon is the property of ABB (XIAMEN) Switchgear CO. LTD. and shall not be used, reproduced for any purpose, or shown to third parties without the written consent of ABB (XIAMEN) Switchgear CO. LTD.

REV.	DESCRIPTION	REV. DATE

DRAWN	XINYU LIU	TITLE	单线图
CHECKED	Jianjun-Wang		
APPROVED	Yongsheng.Li	CONTRACT NO.:	504485024
FIRST DATE	2025/4/28		

FUNCTION: 6kV系统

PROJECT: 天津渤化永利丁辛醇项目

=	SHEET NO 9
SCALE 1:1	TOTAL PAGES 10
DRAWING NO	XZS1-48353-A01-SLD

柜型:	UniGear ZS1
额定电压/系统电压:	7.2kV /6kV
绝缘水平:	30 / 60kV
主母线电流:	3150A
额定频率:	50Hz
主母线类型:	D type CU
控制电源:	220VDC
加热及照明回路电源:	220VAC, 50Hz
储能马达电源:	220VDC
防护等级:	IP41
海拔:	<=1000 m

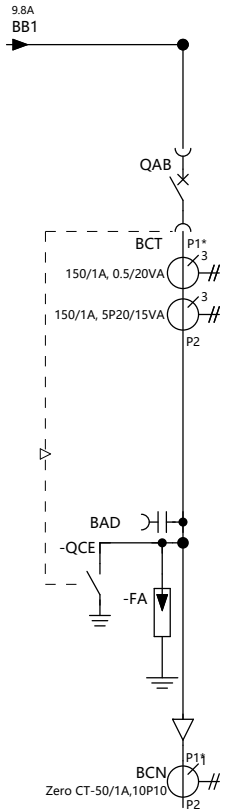

柜体名称	2AH23 电机备用
二次图纸	A01\FM1
测量仪表	1*RISL-E96;1*DSZ178
变送器	1 *50-AT-1
开关柜尺寸(宽X高X深)	650 mm X 2533mm X 1310 mm
智能传感器	MT585,CBx6, BBx3, CAx3
保护继电器	CSD-237A-G
VT消谐方式	---
主开关	VD4/P 12.12.32 P150
避雷器	3*YH2.5WD-8/18.7_400;DJS-II/C
相序	A-B-C
电缆根数	
备注	---
ABB 柜号（内部使用）	L46

This drawing and information contained thereon is the property of ABB (XIAMEN) Switchgear CO. LTD. and shall not be used, reproduced for any purpose ,or shown to third parties without the written consent of ABB (XIAMEN) Switchgear CO. LTD.

REV.	DESCRIPTION	REV. DATE

DRAWN	XINYU LIU	TITLE	单线图
CHECKED	Jianjun-Wang		
APPROVED	Yongsheng.Li	CONTRACT NO.:	504485024
FIRST DATE	2025/4/28		

FUNCTION: 6kV系统

PROJECT: 天津渤化永利丁辛醇项目

=	SHEET NO 10
SCALE 1:1	TOTAL PAGES 10
DRAWING NO	XZS1-48353-A01-SLD

INTER PANEL WIRING DIAGRAM

PANEL NO.	1AH09	1AH06	AH0	AH00	2AH04	2AH06
TYPICAL	P1	I1	B1	D1	I1	P1
	-X2 2	-X5 40 (BK 1.5)				
	-X2 15	-X5 41 (BK 1.5)				
					-X5 40	-X2 2 (BK 1.5)
					-X5 41	-X2 15 (BK 1.5)
	-X5 16		-X3 53 (BK 1.5)			
	-X5 15		-X3 10 (BK 1.5)			
			-X3 53	-X5 16 (BK 1.5)		
			-X3 10	-X5 15 (BK 1.5)		
	-X5 17	-X3 40 (BK 1.5)				
	-X5 18	-X3 41 (BK 1.5)				
					-X3 40	-X5 17 (BK 1.5)
					-X3 41	-X5 18 (BK 1.5)
	-X2 15		-X5 30 (BK 1.5)			
	-X2 16		-X5 31 (BK 1.5)			
			-X5 32	-X2 15 (BK 1.5)		
			-X5 33	-X2 16 (BK 1.5)		
			-X3 29	-X5 5 (BK 1.5)		
			-X3 30	-X5 6 (BK 1.5)		
			-X3 3	-X5 27 (BK 1.5)		
			-X3 34	-X5 28 (BK 1.5)		
			-X3 6	-X5 29 (BK 1.5)		
			-X3 43	-X5 30 (BK 1.5)		
		-X5 28	-X3 22 (BK 1.5)			
		-X5 29	-X3 29 (BK 1.5)			
			-X3 23		-X5 28 (BK 1.5)	
			-X3 28		-X5 29 (BK 1.5)	
			-X5 34	-X3 1 (BK 1.5)		
			-X5 35	-X3 8 (BK 1.5)		

This drawing and information contained thereon is the property of ABB (XIAMEN) Switchgear CO. LTD. and shall not be used, reproduced for any purpose ,or shown to third parties without the written consent of ABB (XIAMEN) Switchgear CO. LTD.

REV.	DESCRIPTION	REV. DATE

DRAWN	XINYU LIU	TITLE	INTER PANEL WIRING DIAGRAM
CHECKED	Jianjun-Wang		
APPROVED	Yongsheng.Li	CONTRACT NO.:	504485024
FIRST DATE	2025/4/28		

FUNCTION: 6kV系统

PROJECT: 天津渤化永利丁辛醇项目

=	SHEET NO 1
SCALE 1:1	TOTAL PAGES 6
DRAWING NO	XZS1-48353-A01-BC

INTER PANEL WIRING DIAGRAM

PANEL NO.	1AH09	1AH06	AH0	AH00	2AH04	2AH06
TYPICAL	P1	I1	B1	D1	I1	P1

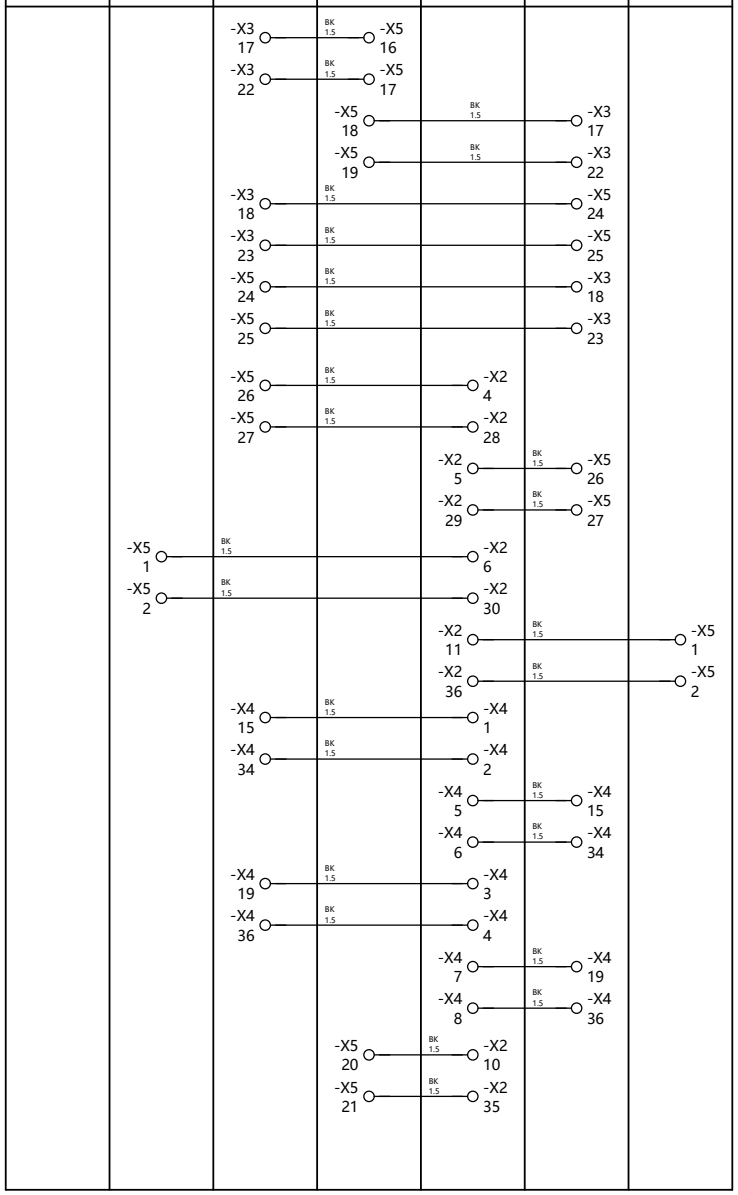

This drawing and information contained thereon is the property of ABB (XIAMEN) Switchgear CO. LTD. and shall not be used, reproduced for any purpose ,or shown to third parties without the written consent of ABB (XIAMEN) Switchgear CO. LTD.

REV.	DESCRIPTION	REV. DATE

DRAWN	XINYU LIU	TITLE	INTER PANEL WIRING DIAGRAM
CHECKED	Jianjun-Wang		
APPROVED	Yongsheng.Li	CONTRACT NO.:	504485024
FIRST DATE	2025/4/28		

FUNCTION: 6kV系统

PROJECT: 天津渤化永利丁辛醇项目

=		SHEET NO	2
SCALE	1:1	TOTAL PAGES	6
DRAWING NO	XZS1-48353-A01-BC		

INTER PANEL WIRING DIAGRAM

PANEL NO.	1AH09	1AH06	AH0	AH00	2AH04	2AH06
TYPICAL	P1	I1	B1	D1	I1	P1
			-X2 17 — BK 1.5 — -X5 8			
			-X2 49 — BK 1.5 — -X5 7			
			-X2 50 — BK 1.5 — -X5 9			

This drawing and information contained thereon is the property of ABB (XIAMEN) Switchgear CO. LTD. and shall not be used, reproduced for any purpose ,or shown to third parties without the written consent of ABB (XIAMEN) Switchgear CO. LTD.

REV.	DESCRIPTION	REV. DATE

DRAWN	XINYU LIU	
CHECKED	Jianjun-Wang	
APPROVED	Yongsheng.Li	
FIRST DATE	2025/4/28	

TITLE: INTER PANEL WIRING DIAGRAM

CONTRACT NO.: 504485024

FUNCTION: 6kV系统

PROJECT: 天津渤化永利丁辛醇项目

=	SHEET NO 3
SCALE 1:1	TOTAL PAGES 6
DRAWING NO	XZS1-48353-A01-BC

INTER PANEL WIRING DIAGRAM

PANEL NO.	1AH11	1AH10			2AH07	2AH08
TYPICAL	FM1	FM1A			FM1C	FM1A
黑, 6	X11 1	X11 1			X11 1	X11 1
黑, 6	X11 2	X11 2			X11 2	X11 2
黑, 6	X11 3	X11 3			X11 3	X11 3
黑, 6	X11 4	X11 4			X11 4	X11 4
黑, 6	X11 5	X11 5			X11 5	X11 5
黑, 6	X11 6	X11 6			X11 6	X11 6
黑, 6	X11 7	X11 7			X11 7	X11 7
黑, 6	X11 8	X11 8			X11 8	X11 8
黑, 2.5	X13 1	X13 1			X13 1	X13 1
黑, 2.5	X13 2	X13 2			X13 2	X13 2
黑, 2.5	X13 3	X13 3			X13 3	X13 3
黑, 2.5	X13 4	X13 4			X13 4	X13 4
黑, 2.5	X13 5	X13 5			X13 5	X13 5
黑, 2.5	X13 6	X13 6			X13 6	X13 6
黑, 2.5	X13 7	X13 7			X13 7	X13 7
黑, 2.5	X13 8	X13 8			X13 8	X13 8
黑, 2.5	X13 9	X13 9			X13 9	X13 9
黑, 2.5	X13 10	X13 10			X13 10	X13 10
棕, 0.75	-X14 X 2	-X14 1			-X14 X 2	-X14 1
蓝, 0.75	-X14 X 4	-X14 3			-X14 X 4	-X14 3
棕, 0.75	-X14 X 6	-X14 5			-X14 X 6	-X14 5
蓝, 0.75	-X14 X 8	-X14 7			-X14 X 8	-X14 7
棕, 0.75	-X14 X 10	-X14 9			-X14 X 10	-X14 9
蓝, 0.75	-X14 X 12	-X14 11			-X14 X 12	-X14 11

X14端子之间的连线采用通讯屏蔽双绞线

This drawing and information contained thereon is the property of ABB (XIAMEN) Switchgear CO. LTD. and shall not be used, reproduced for any purpose ,or shown to third parties without the written consent of ABB (XIAMEN) Switchgear CO. LTD.

REV.	DESCRIPTION	REV. DATE

DRAWN	XINYU LIU	TITLE	INTER PANEL WIRING DIAGRAM
CHECKED	Jianjun-Wang		
APPROVED	Yongsheng.Li	CONTRACT NO.:	504485024
FIRST DATE	2025/4/28		

FUNCTION: 6kV系统

PROJECT: 天津渤化永利丁辛醇项目

=	SHEET NO 4
SCALE 1:1	TOTAL PAGES 6
DRAWING NO	XZS1-48353-A01-BC

INTER PANEL WIRING DIAGRAM

PANEL NO.	1AH21	1AH20	1AH19	1AH18	1AH17	1AH16	1AH15	1AH14	1AH13	1AH12	1AH11	1AH10	1AH08	1AH07	1AH05	1AH04	1AH03	1AH02	1AH01	AH0	2AH01	2AH02
TYPICAL	FT1	FC1	FM2	FM1_3	FM1_3	FM4	FM4_2	FM1	FM1_1	FM3	FM1	FM1_1	FM1	FM1_2	FT2	FT1	FT1	FT1	FT1	B1	FT1	FT1

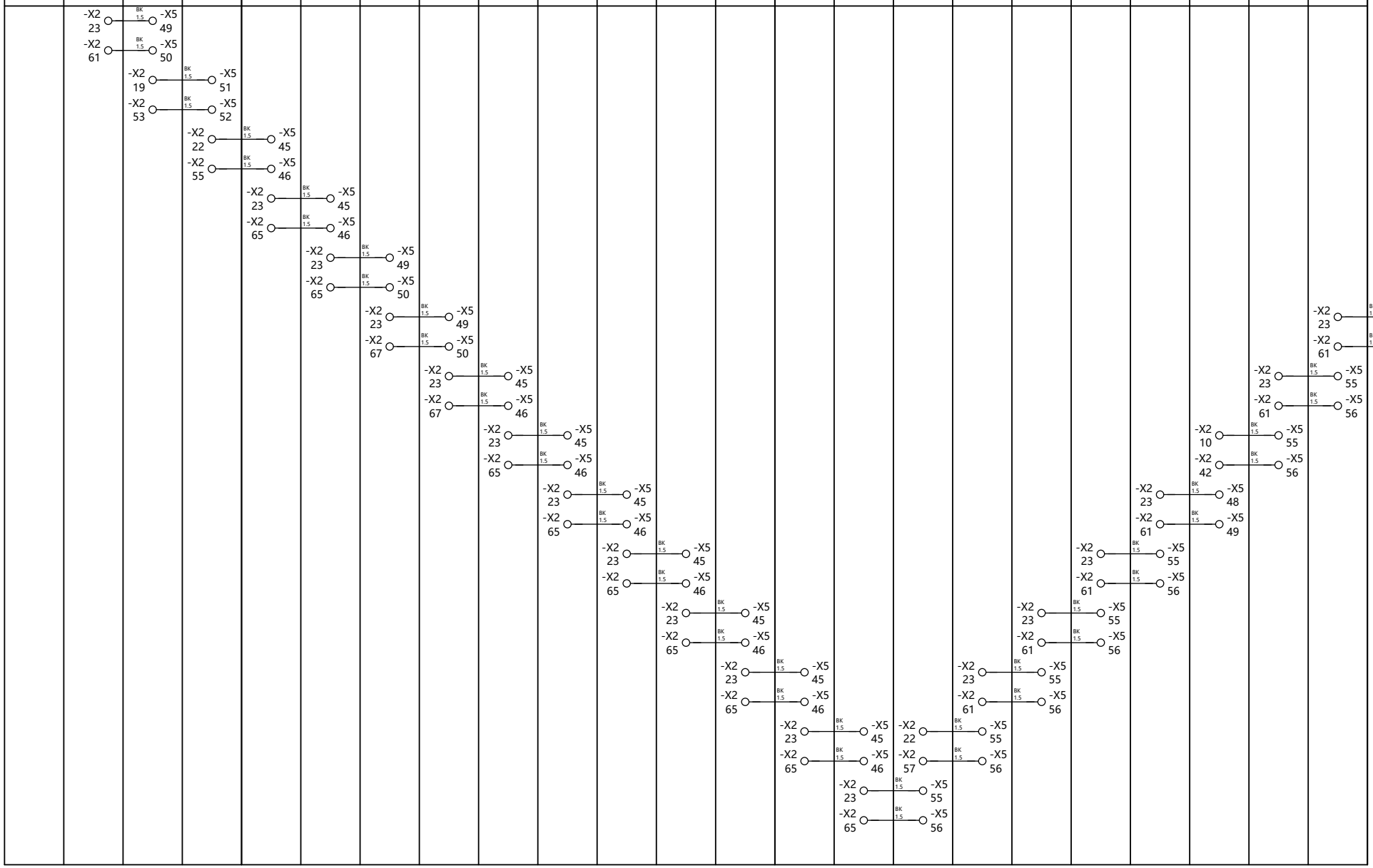

This drawing and information contained thereon is the property of ABB (XIAMEN) Switchgear CO. LTD. and shall not be used, reproduced for any purpose ,or shown to third parties without the written consent of ABB (XIAMEN) Switchgear CO. LTD.

REV.	DESCRIPTION	REV. DATE

DRAWN	XINYU LIU	TITLE	INTER PANEL WIRING DIAGRAM
CHECKED	Jianjun-Wang		
APPROVED	Yongsheng.Li	CONTRACT NO.:	504485024
FIRST DATE	2025/4/28		

FUNCTION: 6kV系统

PROJECT: 天津渤化永利丁辛醇项目

=	SHEET NO 5
SCALE 1:1	TOTAL PAGES 6
DRAWING NO	XZS1-48353-A01-BC

INTER PANEL WIRING DIAGRAM

PANEL NO.	2AH03	2AH05	2AH07	2AH08	2AH09	2AH10	2AH11	2AH12	2AH13	2AH14	2AH15	2AH16	2AH17	2AH18	2AH19	2AH20	2AH21	2AH22	2AH23
TYPICAL	FT1	FT2	FM1_3	FM1_1	FM3	FM1	FM1_1	FM1_1	FM1	FM4_3	FM4_1	FM4_4	FM1_4	FC1	FM1_3	FM1_5	FT1	FT1	FM1

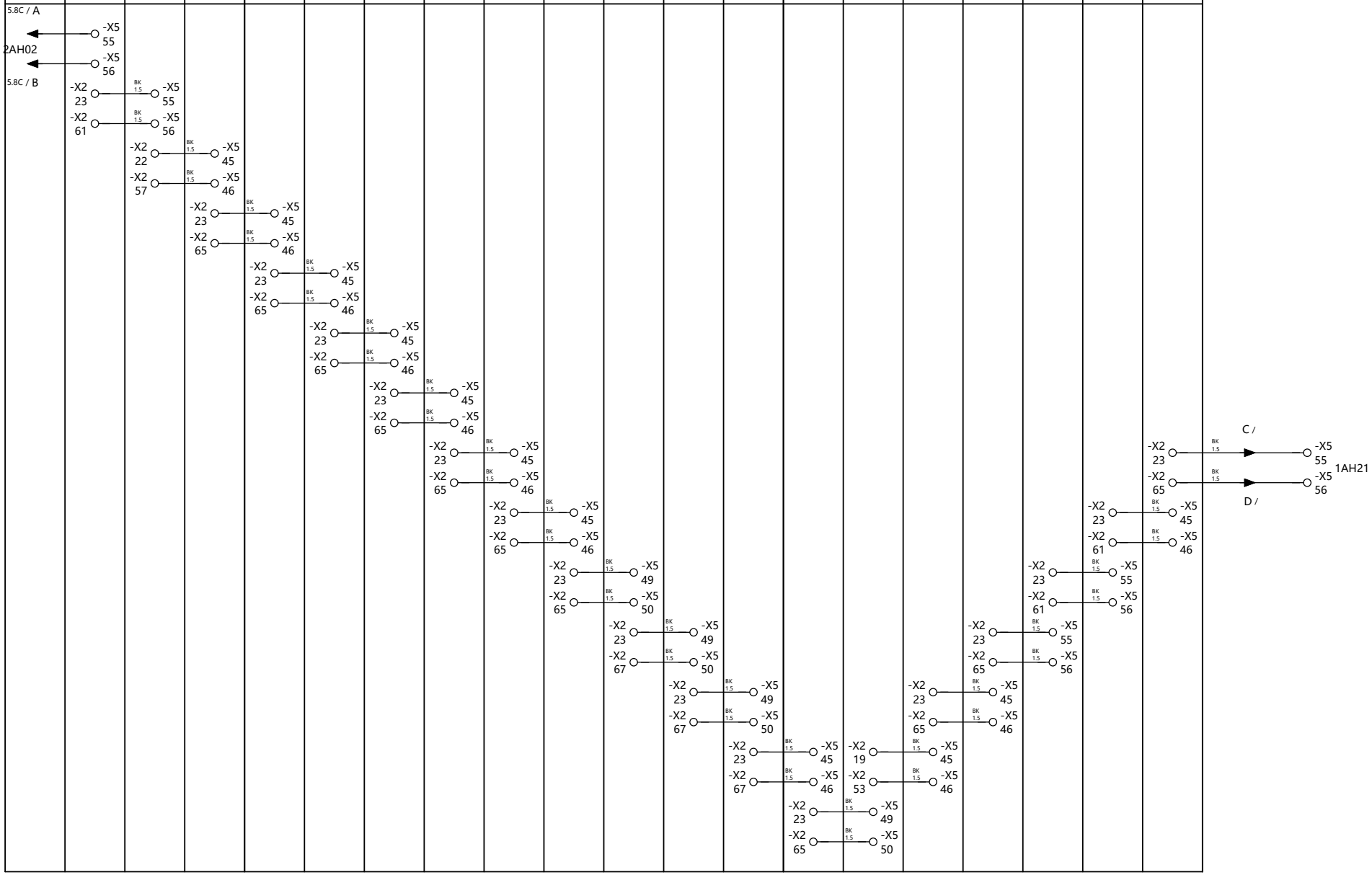

This drawing and information contained thereon is the property of ABB (XIAMEN) Switchgear CO. LTD. and shall not be used, reproduced for any purpose ,or shown to third parties without the written consent of ABB (XIAMEN) Switchgear CO. LTD.

REV.	DESCRIPTION	REV. DATE

DRAWN	XINYU LIU	TITLE	INTER PANEL WIRING DIAGRAM
CHECKED	Jianjun-Wang		
APPROVED	Yongsheng.Li	CONTRACT NO.:	504485024
FIRST DATE	2025/4/28		

FUNCTION: 6kV系统

PROJECT: 天津渤化永利丁辛醇项目

=		SHEET NO	6
SCALE	1:1	TOTAL PAGES	6
DRAWING NO	XZS1-48353-A01-BC		

单线图

一次设备索引			
设备号	设备名称	数量	物料号
-QAB	真空断路器	1	VD4/P-99-R-504206785
-BCT1	电流互感器	1	CTA-G8K314-0084
-BCT2	电流互感器	1	CTA-G8K314-0084
-BCT3	电流互感器	1	CTA-G8K314-0084
-BAD	电容分压装置	3	DIK-06-B06N1000C
-FA	避雷器	3	SAS-YH5WZ-10/27-1

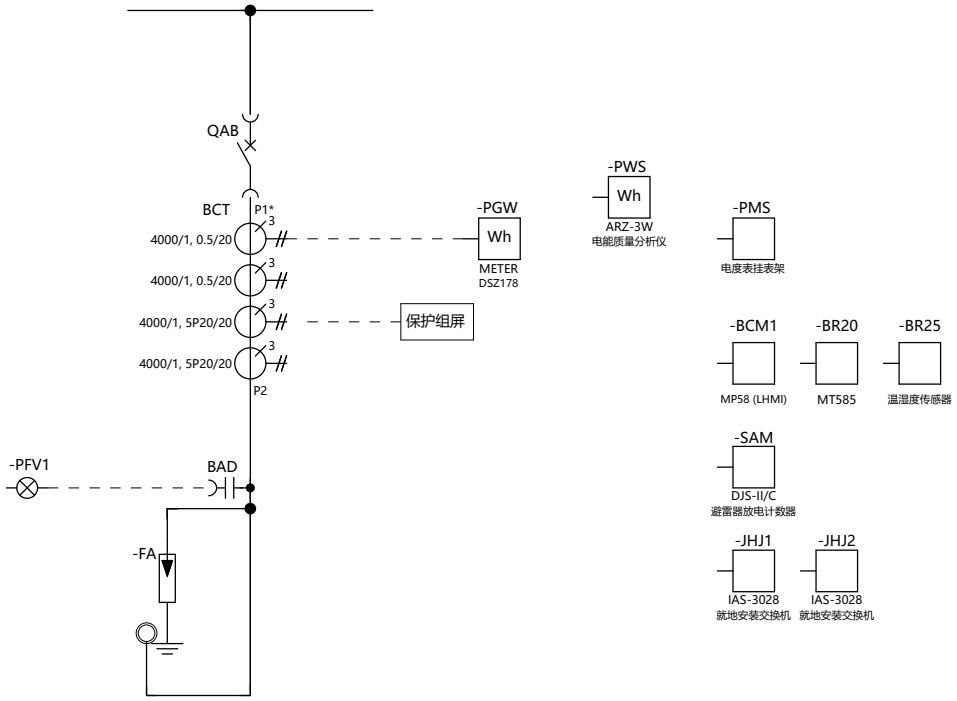

This drawing and information contained thereon is the property of ABB (XIAMEN) Switchgear CO. LTD. and shall not be used, reproduced for any purpose ,or shown to third parties without the written consent of ABB (XIAMEN) Switchgear CO. LTD.

REV.	DESCRIPTION	REV. DATE

DRAWN	XINYU LIU	TITLE	单线图
CHECKED	Jianjun-Wang		
APPROVED	Yongsheng.Li	CONTRACT NO.:	504485024
FIRST DATE	2025/4/28		

FUNCTION: 进线柜

PROJECT: 天津渤化永利丁辛醇项目

= I1 | SHEET NO 1
SCALE 1:1 | TOTAL PAGES 12
DRAWING NO XZS1-48353-A01-I1-S

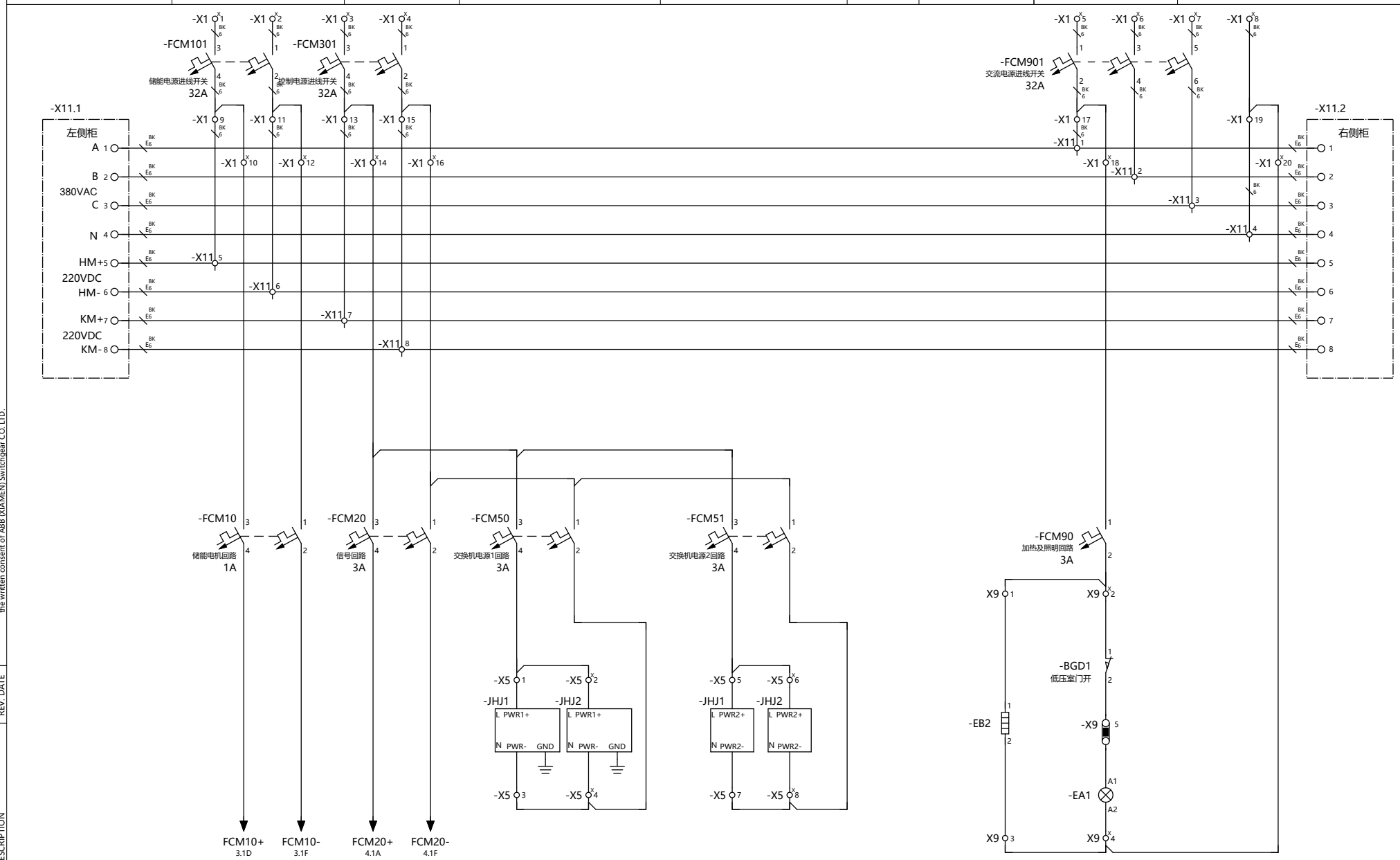

This drawing and information contained thereon is the property of ABB (XIAMEN) Switchgear CO. LTD. and shall not be used, reproduced for any purpose ,or shown to third parties without the written consent of ABB (XIAMEN) Switchgear CO. LTD.

REV.	DESCRIPTION	REV. DATE

DRAWN	XINYU LIU	TITLE	电源小母线回路
CHECKED	Jianjun-Wang		
APPROVED	Yongsheng.Li	CONTRACT NO.:	504485024
FIRST DATE	2025/4/28		

FUNCTION: 进线柜

PROJECT: 天津渤化永利丁辛醇项目

= I1 | SHEET NO 2

SCALE 1:1 | TOTAL PAGES 12

DRAWING NO XZS1-48353-A01-I1-S

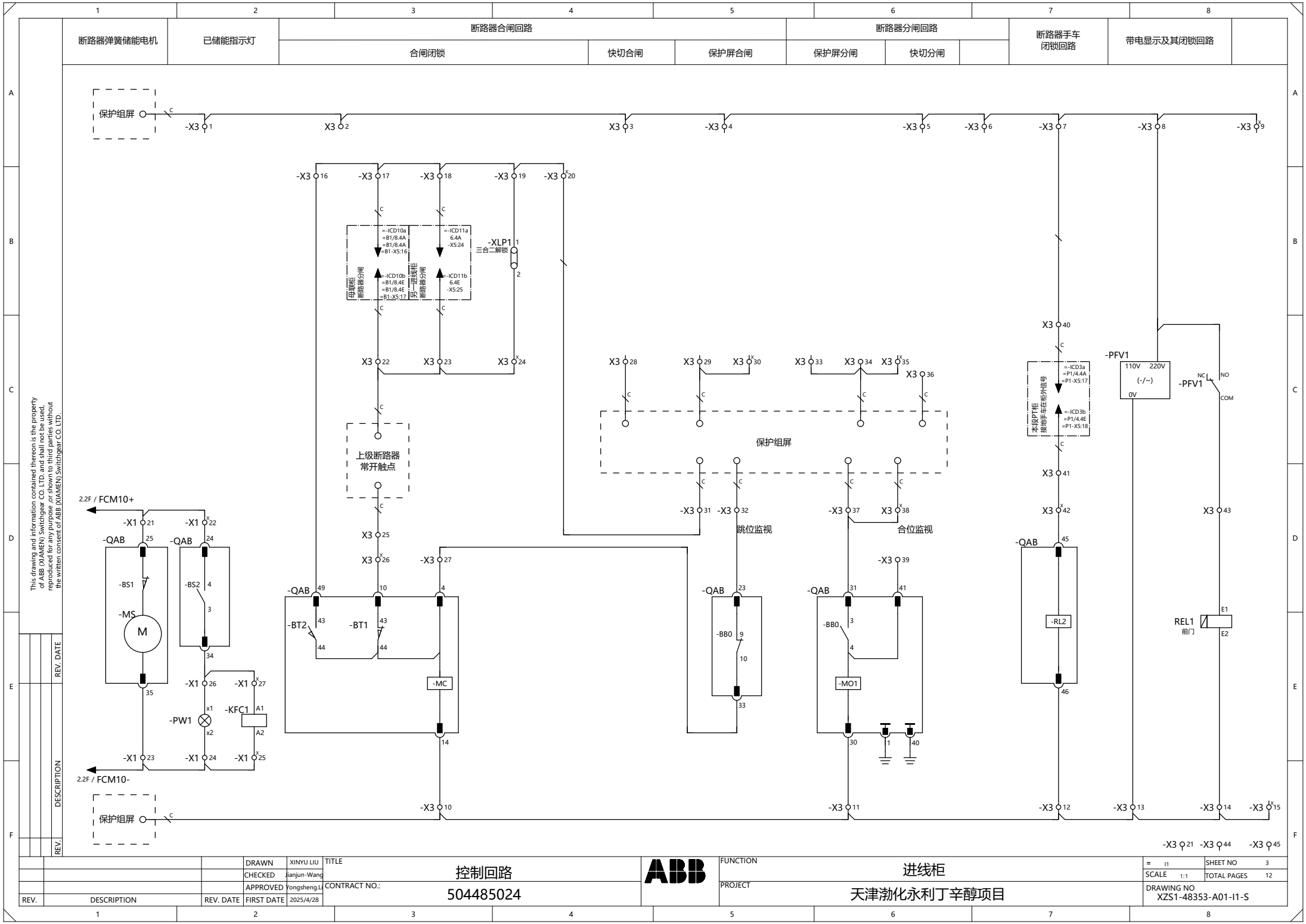
断路器弹簧储能电机
已储能指示灯
断路器合闸回路
合闸闭锁
快切合闸
保护屏合闸
断路器分闸回路
保护屏分闸
快切分闸
断路器手车闭锁回路
带电显示及其闭锁回路
保护组屏
-XLP1
三合二解锁
=-ICD10a
=B1/8.4A
=B1/8.4A
=B1-X5:16
=-ICD10b
=B1/8.4E
=B1/8.4E
=B1-X5:17
母线柜断路器分闸
另一进线柜断路器分闸
=-ICD11a
6.4A
-X5:24
=-ICD11b
6.4E
-X5:25
上级断路器常开触点
跳位监视
合位监视
本段PT柜接地手车压板的信号
=-ICD3a
=P1/4.4A
=P1-X5:17
=-ICD3b
=P1/4.4E
=P1-X5:18
-PFV1
110V 220V
(-/~)
0V
NC
NO
COM
REL1
前门
E1
E2
-RL2
-QAB
-BS1
-MS
M
-BS2
-BT2
-BT1
-MC
-BB0
-MO1
-PW1
-KFC1
A1
A2
2.2F / FCM10+
2.2F / FCM10-
This drawing and information contained thereon is the property of ABB (XIAMEN) Switchgear CO. LTD. and shall not be used, reproduced for any purpose, or shown to third parties without the written consent of ABB (XIAMEN) Switchgear CO. LTD.
REV.
DESCRIPTION
REV. DATE
DRAWN XINYU LIU
CHECKED Jianjun-Wang
APPROVED Yongsheng.Li
FIRST DATE 2025/4/28
TITLE
控制回路
CONTRACT NO.:
504485024
FUNCTION
进线柜
PROJECT
天津渤化永利丁辛醇项目
SHEET NO 3
SCALE 1:1
TOTAL PAGES 12
DRAWING NO
XZS1-48353-A01-I1-S

断路器状态		断路器手车位置		MT585电源	避雷器计数器电源	电能质量分析仪电源	电度表电源
合闸	分闸	工作	试验				

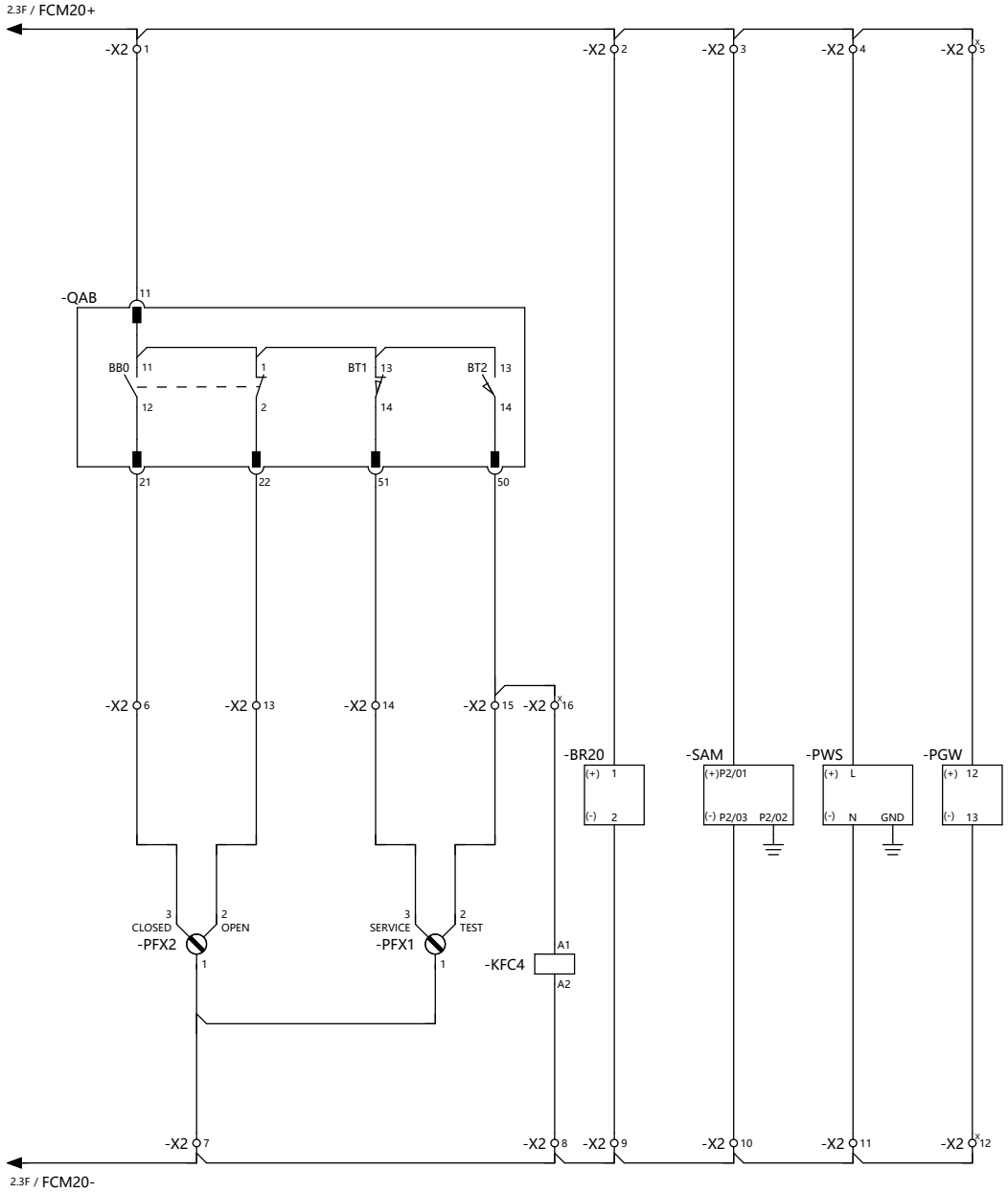

This drawing and information contained thereon is the property of ABB (XIAMEN) Switchgear CO. LTD. and shall not be used, reproduced for any purpose ,or shown to third parties without the written consent of ABB (XIAMEN) Switchgear CO. LTD.

REV.	DESCRIPTION	REV. DATE

DRAWN	XINYU LIU	TITLE	信号回路
CHECKED	Jianjun-Wang		
APPROVED	Yongsheng.Li	CONTRACT NO.:	504485024
FIRST DATE	2025/4/28		

ABB

FUNCTION	进线柜
PROJECT	天津渤化永利丁辛醇项目

=	I1	SHEET NO	4
SCALE	1:1	TOTAL PAGES	12
DRAWING NO	XZS1-48353-A01-I1-S		

弹簧未储能	断路器状态		空开分闸	断路器手车位置	
	分闸	合闸		工作	试验

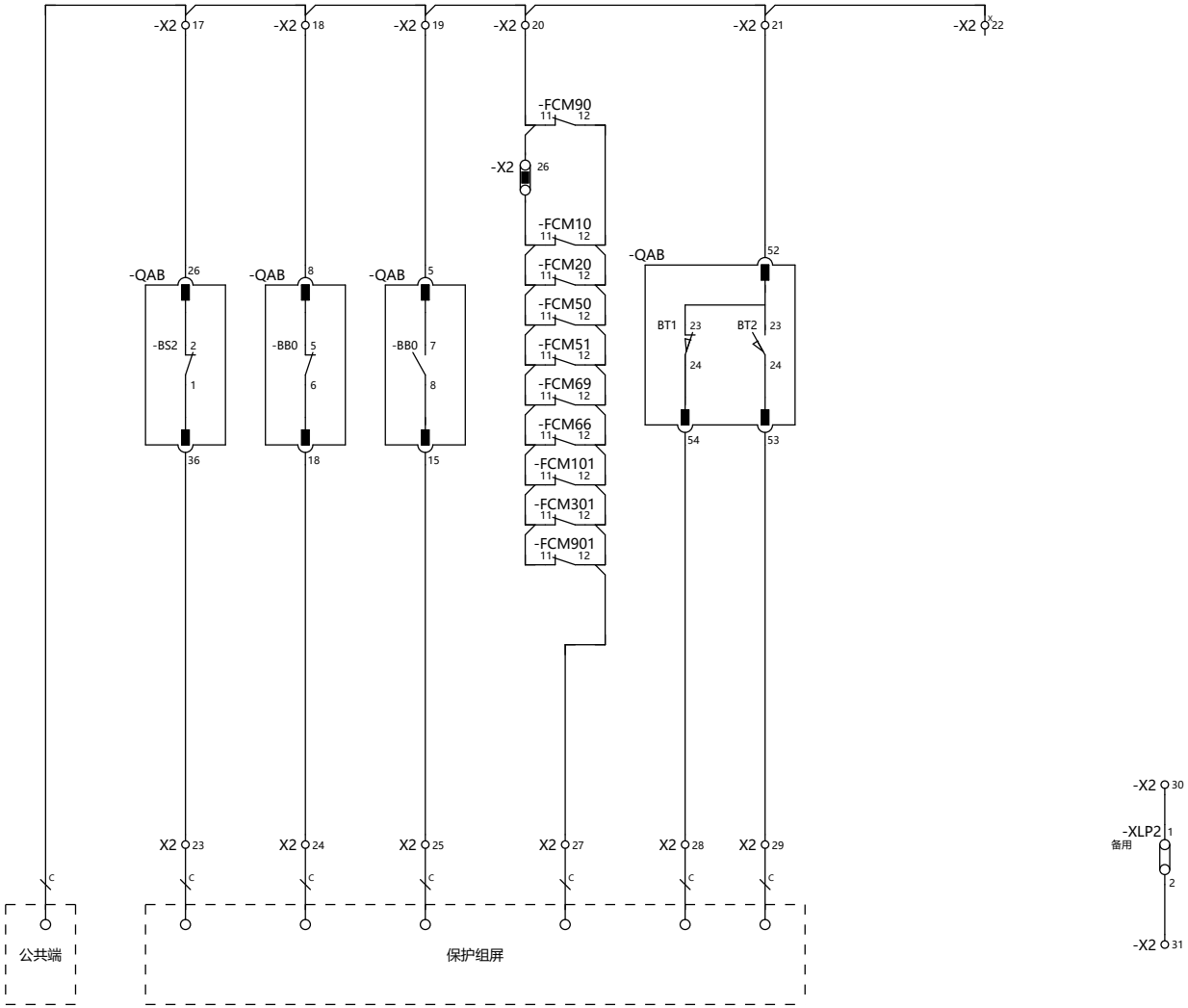

This drawing and information contained thereon is the property of ABB (XIAMEN) Switchgear CO. LTD. and shall not be used, reproduced for any purpose ,or shown to third parties without the written consent of ABB (XIAMEN) Switchgear CO. LTD.

REV.	DESCRIPTION	REV. DATE

DRAWN	XINYU LIU	TITLE	信号回路
CHECKED	Jianjun-Wang		
APPROVED	Yongsheng.Li	CONTRACT NO.:	504485024
FIRST DATE	2025/4/28		

ABB

FUNCTION	进线柜
PROJECT	天津渤化永利丁辛醇项目

=	I1	SHEET NO	5
SCALE	1:1	TOTAL PAGES	12
DRAWING NO	XZS1-48353-A01-I1-S		

断路器已储能	断路器状态				断路器手车位置	
	合闸	分闸	合闸	分闸	工作	试验

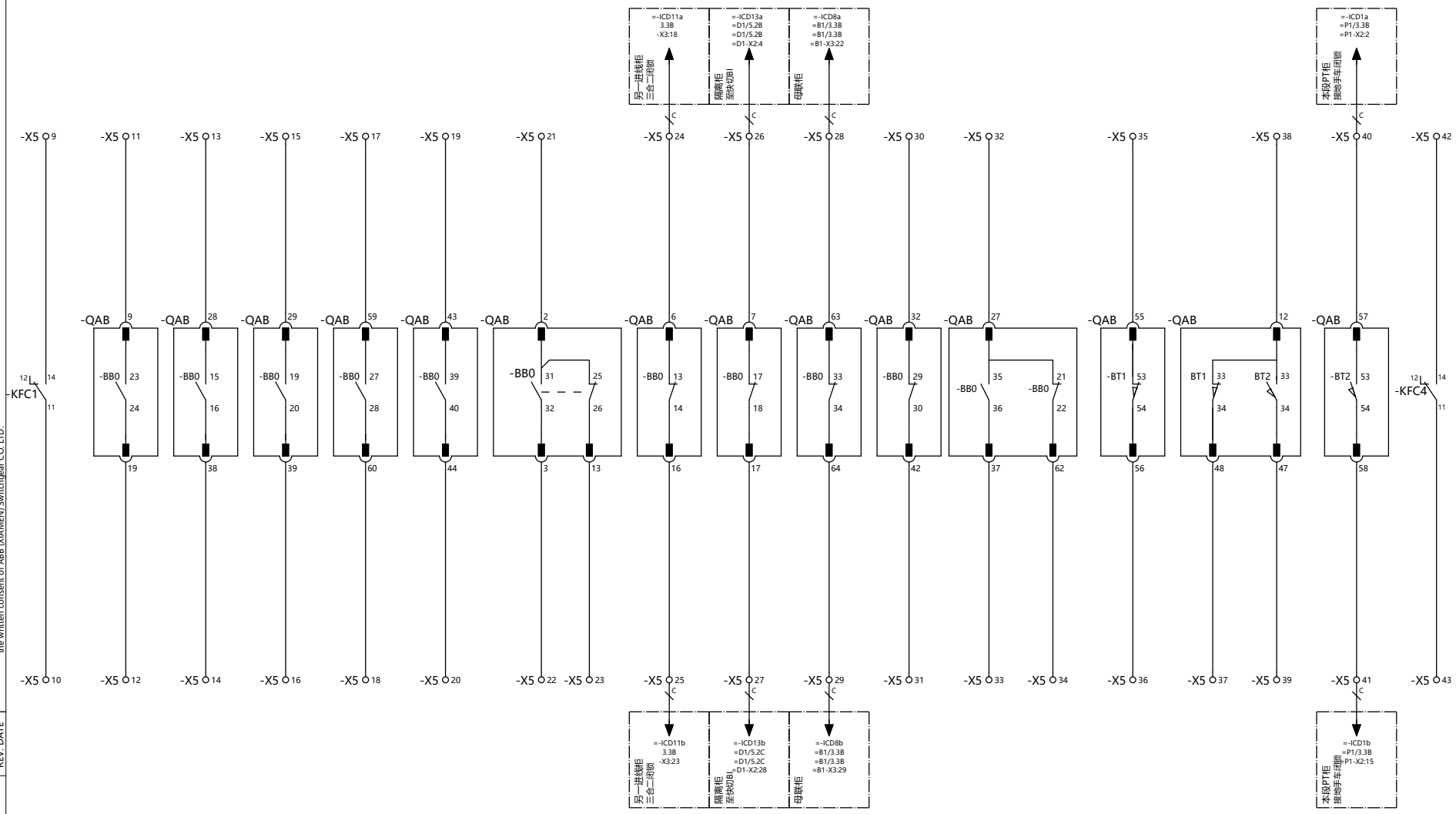

This drawing and information contained thereon is the property of ABB (XIAMEN) Switchgear CO. LTD. and shall not be used, reproduced for any purpose ,or shown to third parties without the written consent of ABB (XIAMEN) Switchgear CO. LTD.

REV.	DESCRIPTION	REV. DATE

DRAWN	XINYU LIU	TITLE	备用回路
CHECKED	Jianjun-Wang		
APPROVED	Yongsheng.Li	CONTRACT NO.:	504485024
FIRST DATE	2025/4/28		

FUNCTION: 进线柜

PROJECT: 天津渤化永利丁辛醇项目

=	I1	SHEET NO	6
SCALE	1:1	TOTAL PAGES	12
DRAWING NO	XZS1-48353-A01-I1-S		

避雷器计数器报警信号	交换机1故障	交换机1报警	交换机2故障	交换机2报警

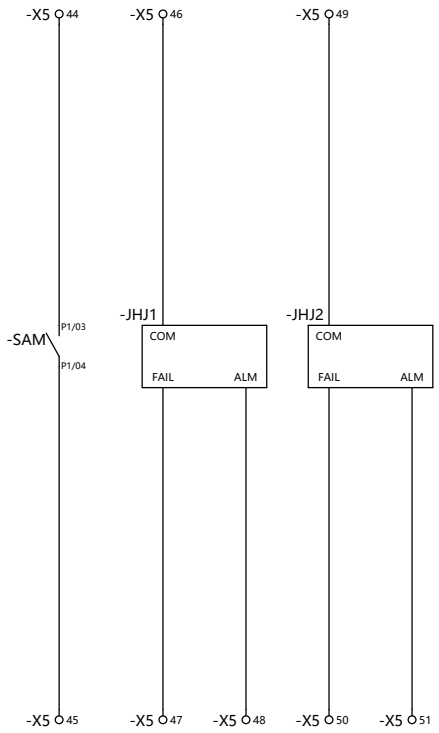

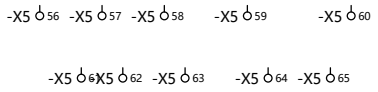

This drawing and information contained thereon is the property of ABB (XIAMEN) Switchgear CO. LTD. and shall not be used, reproduced for any purpose ,or shown to third parties without the written consent of ABB (XIAMEN) Switchgear CO. LTD.

REV.	DESCRIPTION	REV. DATE

DRAWN	XINYU LIU	TITLE	备用回路
CHECKED	Jianjun-Wang		
APPROVED	Yongsheng.Li	CONTRACT NO.:	504485024
FIRST DATE	2025/4/28		

FUNCTION: 进线柜

PROJECT: 天津渤化永利丁辛醇项目

= I1 | SHEET NO 7

SCALE 1:1 | TOTAL PAGES 12

DRAWING NO XZS1-48353-A01-I1-S

通讯小母线

避雷器计数器通讯

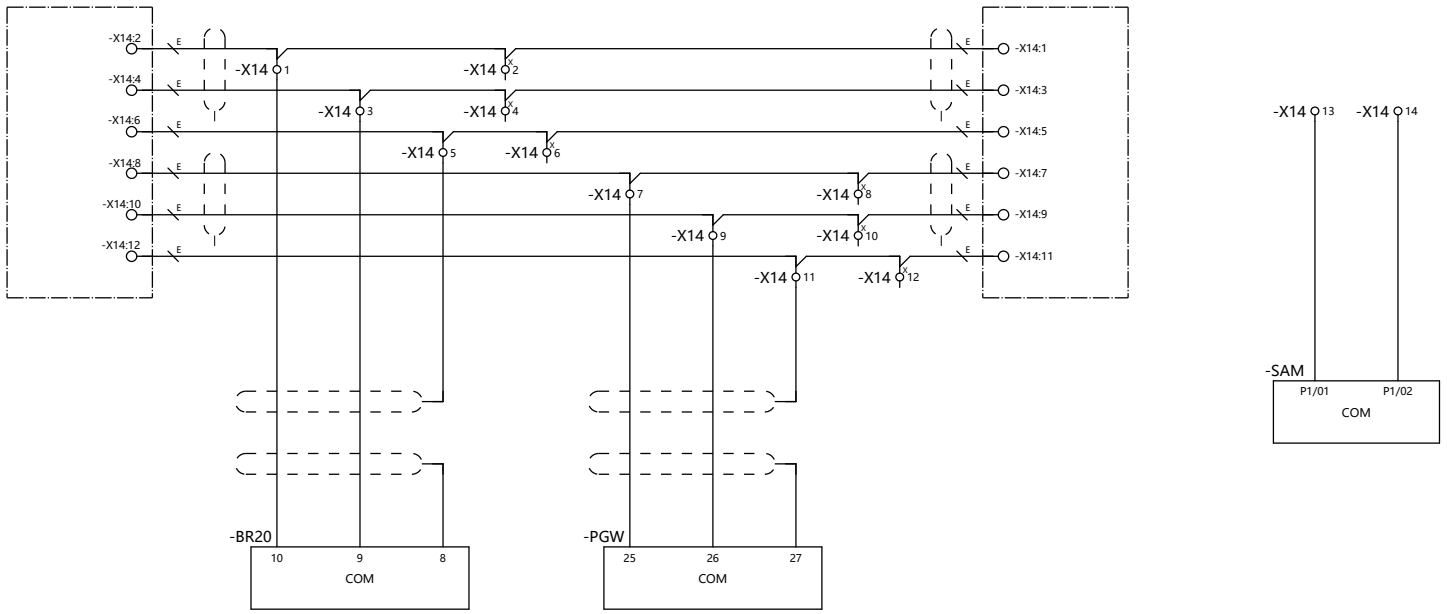

This drawing and information contained thereon is the property of ABB (XIAMEN) Switchgear CO. LTD. and shall not be used, reproduced for any purpose ,or shown to third parties without the written consent of ABB (XIAMEN) Switchgear CO. LTD.

REV.	DESCRIPTION	REV. DATE

DRAWN	XINYU LIU	TITLE	通信回路
CHECKED	Jianjun-Wang		
APPROVED	Yongsheng.Li	CONTRACT NO.:	504485024
FIRST DATE	2025/4/28		

FUNCTION: 进线柜

PROJECT: 天津渤化永利丁辛醇项目

= I1 | SHEET NO 8

SCALE 1:1 | TOTAL PAGES 12

DRAWING NO XZS1-48353-A01-I1-S

MT585 24VDC输出	温湿度控制电源	MT585通讯接口 (与MB585通讯接口)	温湿度控制器通讯	HMI 电源及通讯 示意图

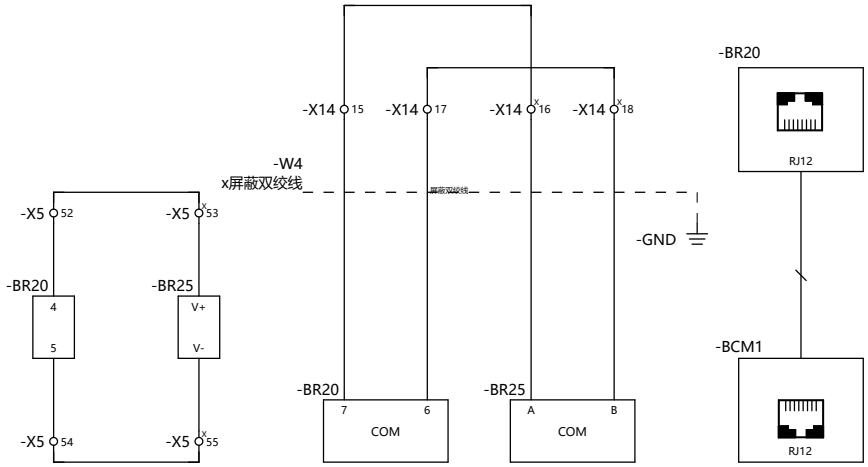

This drawing and information contained thereon is the property of ABB (XIAMEN) Switchgear CO. LTD. and shall not be used, reproduced for any purpose ,or shown to third parties without the written consent of ABB (XIAMEN) Switchgear CO. LTD.

REV.	DESCRIPTION	REV. DATE

DRAWN	XINYU LIU	TITLE	通信回路
CHECKED	Jianjun-Wang		
APPROVED	Yongsheng.Li	CONTRACT NO.:	504485024
FIRST DATE	2025/4/28		

FUNCTION: 进线柜

PROJECT: 天津渤化永利丁辛醇项目

= I1 | SHEET NO 9

SCALE 1:1 | TOTAL PAGES 12

DRAWING NO XZS1-48353-A01-I1-S

电压小母线

计量小母线

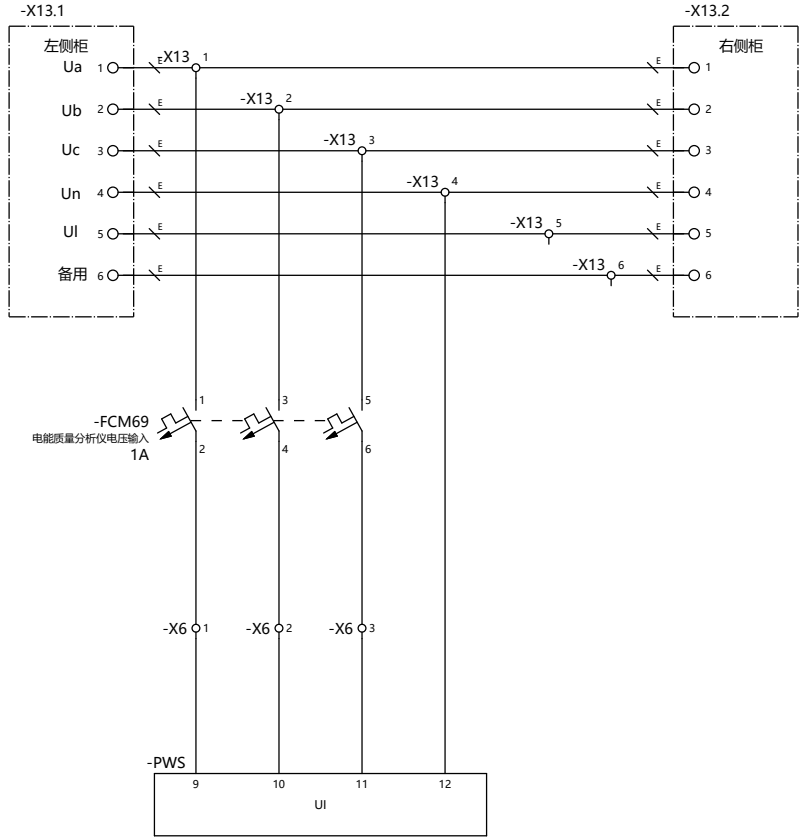

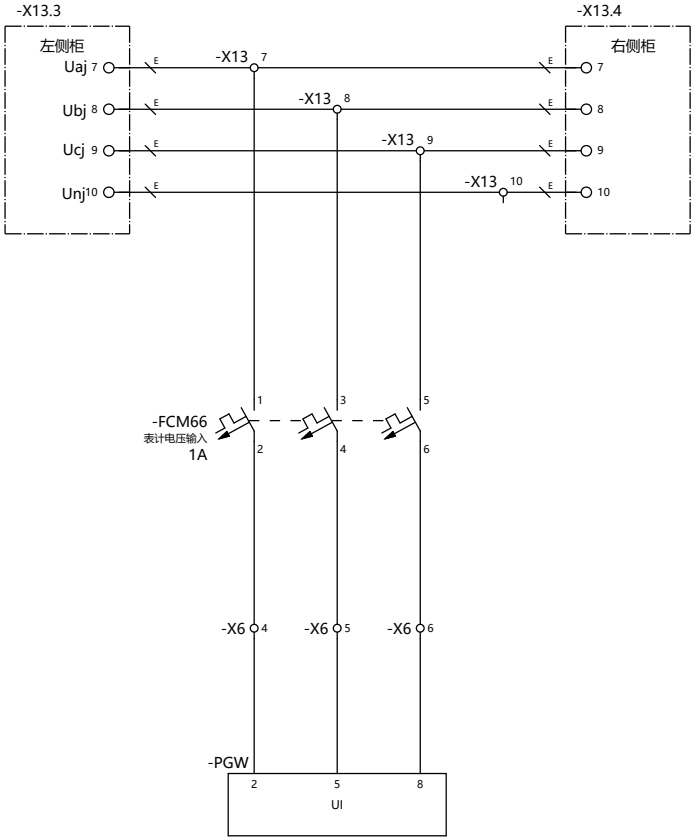

This drawing and information contained thereon is the property of ABB (XIAMEN) Switchgear CO. LTD. and shall not be used, reproduced for any purpose ,or shown to third parties without the written consent of ABB (XIAMEN) Switchgear CO. LTD.

REV.	DESCRIPTION	REV. DATE

DRAWN	XINYU LIU	TITLE	电压小母线
CHECKED	Jianjun-Wang		
APPROVED	Yongsheng.Li	CONTRACT NO.:	504485024
FIRST DATE	2025/4/28		

FUNCTION: 进线柜

PROJECT: 天津渤化永利丁辛醇项目

= I1 | SHEET NO 10

SCALE 1:1 | TOTAL PAGES 12

DRAWING NO XZS1-48353-A01-I1-S

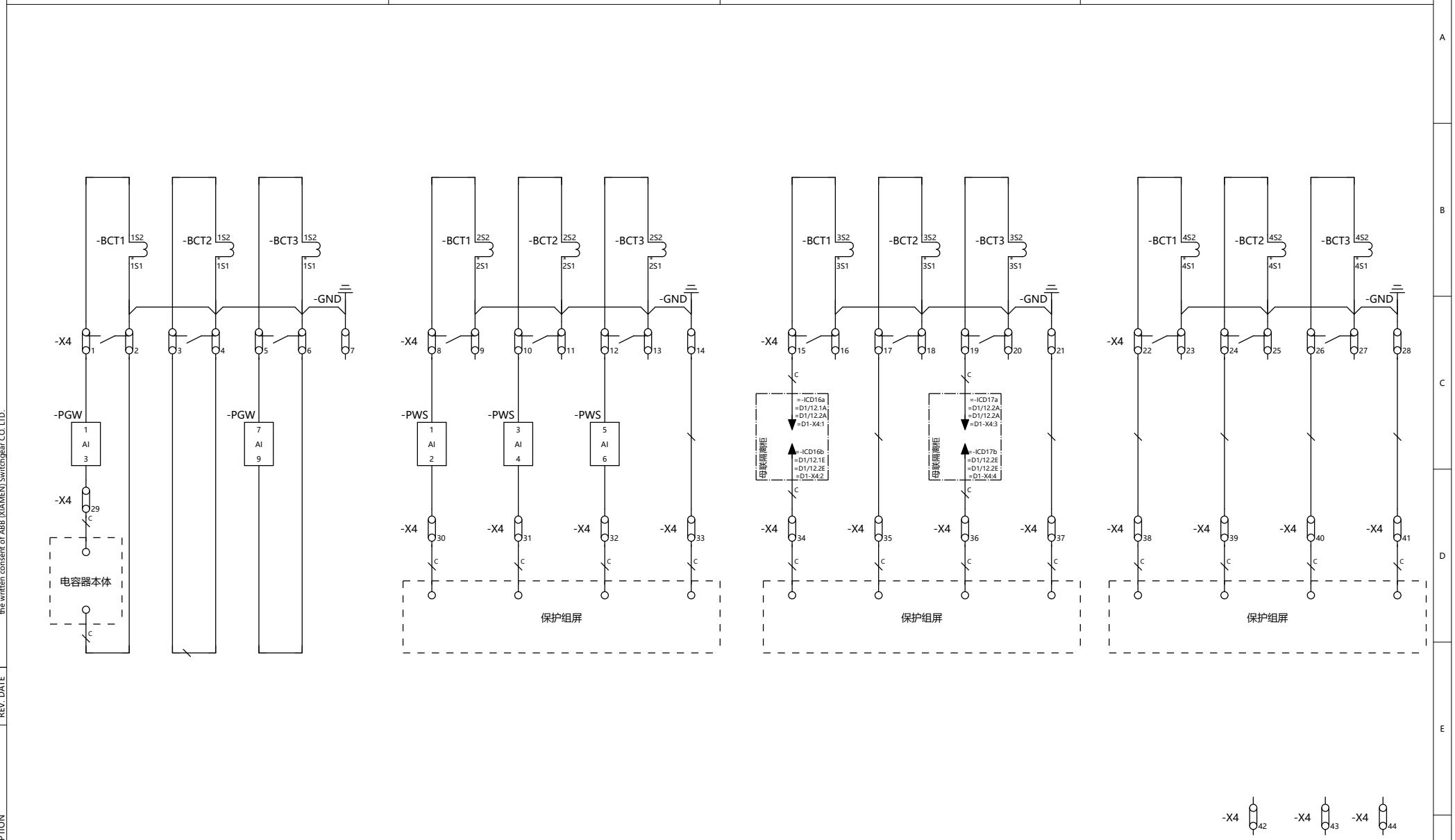

This drawing and information contained thereon is the property of ABB (XIAMEN) Switchgear CO. LTD. and shall not be used, reproduced for any purpose, or shown to third parties without the written consent of ABB (XIAMEN) Switchgear CO. LTD.

REV.	DESCRIPTION	REV. DATE

DRAWN	XINYU LIU	TITLE	电流回路
CHECKED	Jianjun-Wang		
APPROVED	Yongsheng.Li	CONTRACT NO.:	504485024
FIRST DATE	2025/4/28		

FUNCTION: 进线柜

PROJECT: 天津渤化永利丁辛醇项目

=	I1
SCALE	1:1
SHEET NO	11
TOTAL PAGES	12
DRAWING NO	XZS1-48353-A01-I1-S

VD4

-QAB

VD4/P-99-R-504206785

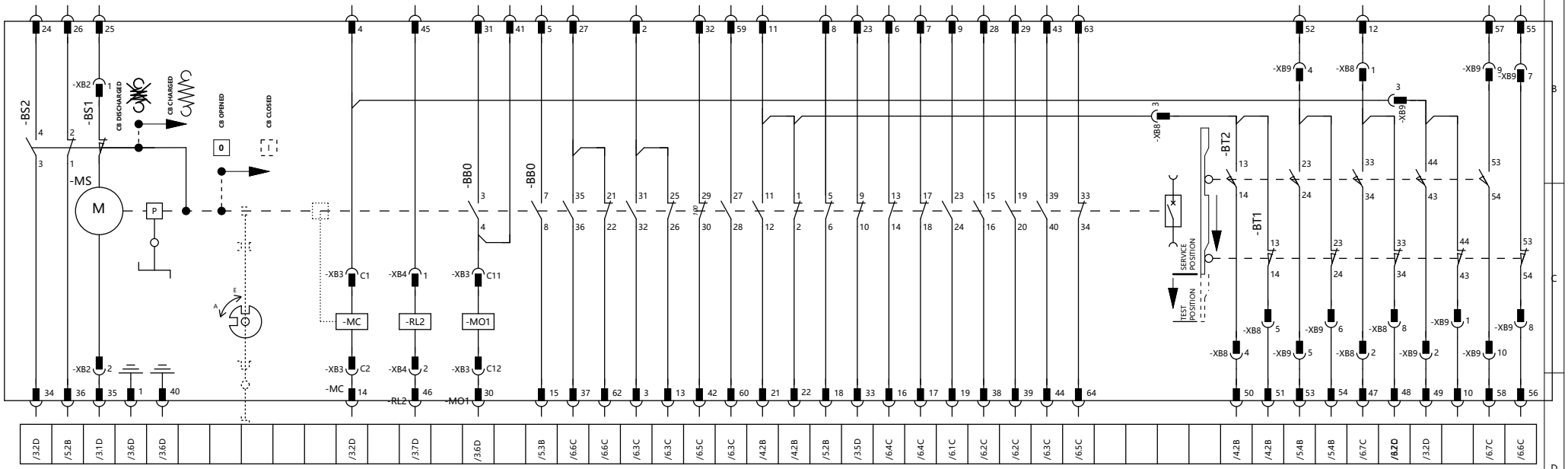

接地开关与断路器手车具有可靠的机械闭锁：
a) 只有当断路器手车位于试验位置时，才允许操作接地开关
b) 只有当接地开关处于分状态时,断路器手车才允许由试验位置推入运行位置。

电气控制接线图/接点位置参考：
此图所示状态为：断路器手车工作位置 断路器处于分闸状态 操作机构弹簧未储能

名称	描述	备注
-MS	弹簧操作机构储能电机	
-BS1	储能电机限位开关	
-MC	合闸脱扣器	
-RL2	手车闭锁电磁铁	
-MO1	第一分闸脱扣器	

名称	描述	备注
-BS2	合闸弹簧储能/未储能信号触点	
-BB0	与断路器主轴联动的辅助开关	
-BT1	限位开关(手车位于运行位置)	
-BT2	限位开关(手车位于试验位置)	

This drawing and information contained thereon is the property of ABB (XIAMEN) Switchgear CO. LTD. and shall not be used, reproduced for any purpose ,or shown to third parties without the written consent of ABB (XIAMEN) Switchgear CO. LTD.

REV.	DESCRIPTION	REV. DATE

DRAWN	XINYU LIU	TITLE	断路器接线图
CHECKED	Jianjun-Wang		
APPROVED	Yongsheng.Li	CONTRACT NO.:	504485024
FIRST DATE	2025/4/28		

FUNCTION: 进线柜

PROJECT: 天津渤化永利丁辛醇项目

=	I1
SCALE	1:1
SHEET NO	12
TOTAL PAGES	12
DRAWING NO	XZS1-48353-A01-I1-S

设备清单(柜体)

序号	设备号	设备名称	物料号	数量	制造商	型号	设备参数
1	-BAD	电容分压装置	DIK-06-B06N1000C	3	ABB	B06N-1000C	Un=7.2kV
2	-BCT1	电流互感器	CTA-G8K314-0084	1	ABB	LMZB1-10	31.5KA/4SEC,4000/1A,C1:0.5/20VA;C2:0.5/20VA;C3:5P20/20VA;C4:5P20/20VA;
3	-BCT2	电流互感器	CTA-G8K314-0084	1	ABB	LMZB1-10	31.5KA/4SEC,4000/1A,C1:0.5/20VA;C2:0.5/20VA;C3:5P20/20VA;C4:5P20/20VA;
4	-BCT3	电流互感器	CTA-G8K314-0084	1	ABB	LMZB1-10	31.5KA/4SEC,4000/1A,C1:0.5/20VA;C2:0.5/20VA;C3:5P20/20VA;C4:5P20/20VA;
5	-EB2	加热器	EP-HEATER-100W	1	SANYANG	1FZEK833B	100W
6	-FA	避雷器	SAS-YH5WZ-10/27-1	3	西安神电	YH5WZ-10/27	额定电压:10KV;持续运行电压:8.0KV;雷电冲击残压:27KV(8/20US 5KA);2ms方波通流容量:400A
7	-QAB	真空断路器	VD4/P-99-R-504206785	1	ABB	VD4/P	NEW VD4 P(旋转式辅助开关) WITHOUT RL1 WITH 9NO+9NC&RL2
8	-REL1	闭锁电磁铁	EP-MAGNET	1	PEAKS	EM10-S	/

This drawing and information contained thereon is the property of ABB (XIAMEN) Switchgear CO. LTD. and shall not be used, reproduced for any purpose ,or shown to third parties without the written consent of ABB (XIAMEN) Switchgear CO. LTD.

REV.	DESCRIPTION	REV. DATE

DRAWN	XINYU LIU	TITLE	设备清单(柜体)
CHECKED	Jianjun-Wang		
APPROVED	Yongsheng.Li	CONTRACT NO.:	504485024
FIRST DATE	2025/4/28		

FUNCTION: 进线柜

PROJECT: 天津渤化永利丁辛醇项目

= I1 | SHEET NO 1

SCALE 1:1 | TOTAL PAGES 3

DRAWING NO XZS1-48353-A01-I1-E

设备清单(低压室面板)

序号	设备号	设备名称	物料号	数量	制造商	型号	设备参数
1	-BCM1	就地显示器	RLY-MP58	1	ABB	MP58 （LHMI）	/
2	-JHJ1	就地安装交换机	CS-BHYL-06	1	北京四方	IAS-3028	装置电源：DC220V
3	-JHJ2	就地安装交换机	CS-BHYL-06	1	北京四方	IAS-3028	装置电源：DC220V
4	-PFV1	强制型带电显示器	VIO-DXN-Q-A10-1	1	LEELEN	DXN-Q	DXN-Q 强制型带电显示器UGZS1 3KV/6KV/10kV，辅助电源：AC/DC 220/110V
5	-PFX1	手车位置指示	PIL-ADWZ25-B/2	1	LEELEN	ADWZ25-B/2	98-242V AC/DC,TRUCK POSITION
6	-PFX2	断路器状态指示	PIL-ADWZ25-K/2	1	LEELEN	ADWZ25-K/2	98-242V AC/DC,CB. STATUS
7	-PW1	白色指示灯	LSA-CL2-520C	1	ABB	CL2-520C	Un=220V DC,WHITE
8	-PWS	电能质量分析仪	CS-BHYL-10	1	川泽电气(厦门)有限公司	ARZ-3W	装置电源：DC220V ;电流输入：1A;电压输入：AC100V
9	-SAM	高灵敏避雷器放电计数器	SAK-DJSII-C-11	1	安徽通辰	DJS-II/C	Un=110~220DC/AC 4.5m;3m
10	-XLP1	插拔式压板	T-JY3-2	1	UPUN	JY3-2	驼色
11	-XLP2	插拔式压板	T-JY3-2	1	UPUN	JY3-2	驼色

This drawing and information contained thereon is the property of ABB (XIAMEN) Switchgear CO. LTD. and shall not be used, reproduced for any purpose ,or shown to third parties without the written consent of ABB (XIAMEN) Switchgear CO. LTD.

REV.	DESCRIPTION	REV. DATE

DRAWN	XINYU LIU	TITLE	设备清单(低压室面板)
CHECKED	Jianjun-Wang		
APPROVED	Yongsheng.Li	CONTRACT NO.:	504485024
FIRST DATE	2025/4/28		

FUNCTION: 进线柜

PROJECT: 天津渤化永利丁辛醇项目

= I1 | SHEET NO 2

SCALE 1:1 | TOTAL PAGES 3

DRAWING NO XZS1-48353-A01-I1-E

设备清单(低压室)

序号	设备号	设备名称	物料号	数量	制造商	型号	设备参数
1	-BGD1	微动开关	EP-LVMS	1	PEAKS	TS11-001-01	MECHANICAL LIFE TIME>1000000TIMES
2	-BR20	TEMPERATURE MONITOR	RLY-MT585	1	ABB	MT585	100-240VDC/AC
3	-BR25	Humidity & Temperature Sensor	1YHT010000P0009	1	/	/	/
4	-EA1	LED低压室照明灯	L-CL10-1C-W-AA	1	PEAKS	CL10-1C-W-AA	SUPPLY: AC198~242V; POWER: <4W
5	-FCM10	微型空气开关	MCBA-202M-C1DC;MBDA-S2C-H11R	1;1	ABB	S202M-C1DC;S2C-H11R	Un=440V DC,In=1A,2-POLE
6	-FCM20	微型空气开关	MCBA-202M-C3DC;MBDA-S2C-H11R	1;1	ABB	S202M-C3DC;S2C-H11R	Un=440V DC,In=3A,2-POLE
7	-FCM50	微型空气开关	MCBA-202M-C3DC;MBDA-S2C-H11R	1;1	ABB	S202M-C3DC;S2C-H11R	Un=440V DC,In=3A,2-POLE
8	-FCM51	微型空气开关	MCBA-202M-C3DC;MBDA-S2C-H11R	1;1	ABB	S202M-C3DC;S2C-H11R	Un=440V DC,In=3A,2-POLE
9	-FCM66	微型空气开关	MCBA-2030001R0014;MBDA-S2C-H11R	1;1	ABB	S203-C1;S2C-H11R	Un=400V AC,In=1A,3-POLE
10	-FCM69	微型空气开关	MCBA-2030001R0014;MBDA-S2C-H11R	1;1	ABB	S203-C1;S2C-H11R	Un=400V AC,In=1A,3-POLE
11	-FCM90	微型空气开关	MCBA-2010001R0034;MBDA-S2C-H11R	1;1	ABB	S201-C3;S2C-H11R	Un=230V AC,In=3A,1-POLE
12	-FCM101	微型空气开关	MCBA-202M-C32DC;MBDA-S2C-H11R	1;1	ABB	S202M-C32DC;S2C-H11R	Un=440V DC,In=32A,2-POLE
13	-FCM301	微型空气开关	MCBA-202M-C32DC;MBDA-S2C-H11R	1;1	ABB	S202M-C32DC;S2C-H11R	Un=440V DC,In=32A,2-POLE
14	-FCM901	微型空气开关	MCBA-2030001R0324;MBDA-S2C-H11R	1;1	ABB	S203-C32;S2C-H11R	Un=400V AC,In=32A,3-POLE
15	-KFC1	中间继电器	RLY-CRMX220DC4	1	ABB	CRMX220DC4	CR-MX220DC4,UN=220V DC
16	-KFC4	中间继电器	RLY-CRMX220DC4	1	ABB	CRMX220DC4	CR-MX220DC4,UN=220V DC
17	-PGW	电能表	CS-BHYL-07	1	Wisdom	DSZ178	装置电源：DC220V;电流输入：1A;电压输入：AC100V
18	-PMS	电度表挂表架	PMM-AUX-01	1	/	270	

This drawing and information contained thereon is the property of ABB (XIAMEN) Switchgear CO. LTD. and shall not be used, reproduced for any purpose ,or shown to third parties without the written consent of ABB (XIAMEN) Switchgear CO. LTD.

REV.	DESCRIPTION	REV. DATE

DRAWN	XINYU LIU	TITLE	设备清单(低压室)
CHECKED	Jianjun-Wang		
APPROVED	Yongsheng.Li	CONTRACT NO.:	504485024
FIRST DATE	2025/4/28		

FUNCTION: 进线柜

PROJECT: 天津渤化永利丁辛醇项目

= I1 | SHEET NO 3

SCALE 1:1 | TOTAL PAGES 3

DRAWING NO XZS1-48353-A01-I1-E

REV.	DESCRIPTION	REV. DATE

This drawing and information contained thereon is the property of ABB (XIAMEN) Switchgear CO. LTD. and shall not be used, reproduced for any purpose ,or shown to third parties without the written consent of ABB (XIAMEN) Switchgear CO. LTD.

==A01=I1+-X1

备注	外引电缆	设备	线号	端子号	型号	线号	设备	外引电缆	备注
				1	NEK10		-FCM101:3		6黑色
				2	NEK10		-FCM101:1		6黑色
				3	NEK10		-FCM301:3		6黑色
				4	NEK10		-FCM301:1		6黑色
				5	NEK10		-FCM901:1		6黑色
				6	NEK10		-FCM901:3		6黑色
				7	NEK10		-FCM901:5		6黑色
				8	NEK10		-X1:19		6黑色
6黑色		-FCM101:4		9	NEK6		-X11:5		6黑色
				10	NEK6		-FCM10:3		
6黑色		-FCM101:2		11	NEK6		-X11:6		6黑色
				12	NEK6		-FCM10:1		
6黑色		-FCM301:4		13	NEK6		-X11:7		6黑色
				14	NEK6		-FCM20:3		
6黑色		-FCM301:2		15	NEK6		-X11:8		6黑色
				16	NEK6		-FCM20:1		
6黑色		-FCM901:2		17	NEK6		-X11:1		6黑色
				18	NEK6		-FCM90:1		
6黑色		-X1:8		19	NEK6		-X11:4		6黑色
				20	NEK6		-X9:4		
		-FCM10:4		21	NEK4		-QAB:25		
				22	NEK4		-QAB:24		
		-FCM10:2		23	NEK4		-QAB:35		
				24	NEK4		-PW1:x2		
				25	NEK4		-KFC1:A2		
		-QAB:34		26	NEK4		-PW1:x1		
				27	NEK4		-KFC1:A1		

☆ 柜间小母线,随柜提供

△ 柜间控制电路(由客户自备)

短接排

✕ 分隔板

(测试短接片

O 其他

REV.	DESCRIPTION	REV. DATE

DRAWN	XINYU LIU	TITLE
CHECKED	Jianjun-Wang	
APPROVED	Yongsheng.Li	CONTRACT NO.:
FIRST DATE	2025/4/28	504485024

端子图表 ==A01=I1+-X1

FUNCTION 进线柜

PROJECT 天津渤化永利丁辛醇项目

=	I1	SHEET NO. 1
SCALE	1:1	TOTAL PAGES 11
DRAWING NO.	XZS1-48353-A01-I1-T	

REV.	DESCRIPTION	REV. DATE

This drawing and information contained thereon is the property of ABB (XIAMEN) Switchgear CO. LTD. and shall not be used, reproduced for any purpose ,or shown to third parties without the written consent of ABB (XIAMEN) Switchgear CO. LTD.

==A01=I1+-X2

备注	外引电缆	设备	线号	端子号	型号	线号	设备	外引电缆	备注
		-FCM20:4		1	NEK4		-QAB:11		
				2	NEK4		-BR20:1		
				3	NEK4		-SAM:P2/01		
				4	NEK4		-PWS:L		
				5	NEK4		-PGW:12		
		-QAB:21		6	NEK4		-PFX2:3		
		-FCM20:2		7	NEK4		-PFX2:1		
				8	NEK4		-KFC4:A2		
				9	NEK4		-BR20:2		
				10	NEK4		-SAM:P2/03		
				11	NEK4		-PWS:N		
				12	NEK4		-PGW:13		
		-QAB:22		13	NEK4		-PFX2:2		
		-QAB:51		14	NEK4		-PFX1:3		
		-QAB:50		15	NEK4		-PFX1:2		
				16	NEK4		-KFC4:A1		
	△	-公共端		17	NEK4		-QAB:26		
				18	NEK4		-QAB:8		
				19	NEK4		-QAB:5		
				20	NEK4		-FCM90:11		
				21	NEK4		-QAB:52		
				22	NEK4				
	△	-保护组屏		23	NEK4		-QAB:36		
	△	-保护组屏		24	NEK4		-QAB:18		
	△	-保护组屏		25	NEK4		-QAB:15		
		-FCM10:11		26	RCT4SW		-FCM90:11		
	△	-保护组屏		27	NEK4		-FCM901:12		
	△	-保护组屏		28	NEK4		-QAB:54		
	△	-保护组屏		29	NEK4		-QAB:53		
				30	NEK4		-XLP2:1		
				31	NEK4		-XLP2:2		

☆ 柜间小母线,随柜提供

△ 柜间控制电路(由客户自备)

短接排

✕ 分隔板

(测试短接片

O 其他

DRAWN	XINYU LIU
CHECKED	Jianjun-Wang
APPROVED	Yongsheng.Li
FIRST DATE	2025/4/28
REV. DATE	
REV.	
DESCRIPTION	

TITLE: 端子图表 ==A01=I1+-X2

CONTRACT NO.: 504485024

FUNCTION: 进线柜

PROJECT: 天津渤化永利丁辛醇项目

=	I1
SCALE	1:1
DRAWING NO.	XZS1-48353-A01-I1-T
SHEET NO.	2
TOTAL PAGES	11

REV.	DESCRIPTION	REV. DATE

This drawing and information contained thereon is the property of ABB (XIAMEN) Switchgear CO. LTD. and shall not be used, reproduced for any purpose ,or shown to third parties without the written consent of ABB (XIAMEN) Switchgear CO. LTD.

==A01=I1+-X3

备注	外引电缆	设备	线号	端子号	型号	线号	设备	外引电缆	备注
	△	-保护组屏		1	NEK4				
				2	NEK4				
				3	NEK4				
				4	NEK4				
				5	NEK4				
				6	NEK4				
				7	NEK4		-X3:40		
				8	NEK4		-PFV1:220V		
				9	NEK4				
	△	-保护组屏		10	NEK4		-QAB:14		
				11	NEK4		-QAB:30		
				12	NEK4		-QAB:46		
				13	NEK4		-PFV1:0V		
				14	NEK4		-REL1:E2		
				15	NEK4				
				16	NEK4		-QAB:49		
	△	=B1-X5:16		17	NEK4				
	△	=B1-X5:18							
	△	-X5:24		18	NEK4				
				19	NEK4		-XLP1:1		
				20	NEK4		-X3:31		
				21	NEK4				
	△	=B1-X5:17		22	NEK4		-上级断路器常开触点	△	
	△	=B1-X5:19							
	△	-X5:25		23	NEK4				
				24	NEK4		-XLP1:2		
	△	-上级断路器常开触点		25	NEK4				
				26	NEK4		-QAB:10		
		-QAB:33		27	NEK4		-QAB:4		
	△	-保护组屏		28	NEK4				
	△	-保护组屏		29	NEK4				
				30	NEK4				
	△	-保护组屏		31	NEK4		-X3:20		
	△	-保护组屏		32	NEK4		-QAB:23		
				33	NEK4				
	△	-保护组屏		34	NEK4				
				35	NEK4				
	△	-保护组屏		36	NEK4				
	△	-保护组屏		37	NEK4		-QAB:31		
	△	-保护组屏		38	NEK4				
				39	NEK4		-QAB:41		
	△	=P1-X5:17		40	NEK4		-X3:7		
	△	=P1-X5:18		41	NEK4				
				42	NEK4		-QAB:45		
		-PFV1:COM		43	NEK4		-REL1:E1		
				44	NEK4				
				45	NEK4				

☆ 柜间小母线,随柜提供

△ 柜间控制电路(由客户自备)

短接排

✕ 分隔板

(测试短接片

O 其他

REV.	DESCRIPTION	REV. DATE

DRAWN	XINYU LIU	TITLE
CHECKED	Jianjun-Wang	端子图表 ==A01=I1+-X3
APPROVED	Yongsheng.Li	CONTRACT NO.:
FIRST DATE	2025/4/28	504485024

FUNCTION 进线柜

PROJECT 天津渤化永利丁辛醇项目

= I1	SCALE 1:1	SHEET NO 3
DRAWING NO XZS1-48353-A01-I1-T		TOTAL PAGES 11

REV.	DESCRIPTION	REV. DATE

This drawing and information contained thereon is the property of ABB (XIAMEN) Switchgear CO. LTD. and shall not be used, reproduced for any purpose ,or shown to third parties without the written consent of ABB (XIAMEN) Switchgear CO. LTD.

==A01=I1+-X4

备注	外引电缆	设备	线号	端子号	型号	线号	设备	外引电缆	备注
		-BCT1:1S2		1	NEK6S		-PGW:1		
		-BCT1:1S1		2	NEK6S		-电容器本体	△	
		-BCT2:1S2		3	NEK6S		-X4:4		
		-BCT2:1S1		4	NEK6S		-X4:3		
		-BCT3:1S2		5	NEK6S		-PGW:7		
		-BCT3:1S1		6	NEK6S		-PGW:9		
		-GND		7	NEK6S				
		-BCT1:2S2		8	NEK6S		-PWS:1		
		-BCT1:2S1		9	NEK6S				
		-BCT2:2S2		10	NEK6S		-PWS:3		
		-BCT2:2S1		11	NEK6S				
		-BCT3:2S2		12	NEK6S		-PWS:5		
		-BCT3:2S1		13	NEK6S				
		-GND		14	NEK6S		-X4:33		
		-BCT1:3S2		15	NEK6S		=D1-X4:1	△	
							=D1-X4:5	△	
		-BCT1:3S1		16	NEK6S				
		-BCT2:3S2		17	NEK6S		-X4:35		
		-BCT2:3S1		18	NEK6S				
		-BCT3:3S2		19	NEK6S		=D1-X4:3	△	
							=D1-X4:7	△	
		-BCT3:3S1		20	NEK6S				
		-GND		21	NEK6S		-X4:37		
		-BCT1:4S2		22	NEK6S		-X4:38		
		-BCT1:4S1		23	NEK6S				
		-BCT2:4S2		24	NEK6S		-X4:39		
		-BCT2:4S1		25	NEK6S				
		-BCT3:4S2		26	NEK6S		-X4:40		
		-BCT3:4S1		27	NEK6S				
		-GND		28	NEK6S		-X4:41		
		-PGW:3		29	NEK6S		-电容器本体	△	
		-PWS:2		30	NEK6S		-保护组屏	△	
		-PWS:4		31	NEK6S		-保护组屏	△	
		-PWS:6		32	NEK6S		-保护组屏	△	
		-X4:14		33	NEK6S		-保护组屏	△	
	△	=D1-X4:2		34	NEK6S		-保护组屏	△	
	△	=D1-X4:6							
		-X4:17		35	NEK6S		-保护组屏	△	
	△	=D1-X4:4		36	NEK6S		-保护组屏	△	
	△	=D1-X4:8							
		-X4:21		37	NEK6S		-保护组屏	△	
		-X4:22		38	NEK6S		-保护组屏	△	
		-X4:24		39	NEK6S		-保护组屏	△	
		-X4:26		40	NEK6S		-保护组屏	△	
		-X4:28		41	NEK6S		-保护组屏	△	
				42	NEK6S				
				43	NEK6S				
				44	NEK6S				

☆ 柜间小母线,随柜提供

△ 柜间控制电路(由客户自备)

短接排

✕ 分隔板

(测试短接片

O 其他

DRAWN	XINYU LIU	TITLE
CHECKED	Jianjun-Wang	端子图表 ==A01=I1+-X4
APPROVED	Yongsheng.Li	CONTRACT NO.:
FIRST DATE	2025/4/28	504485024
REV. DATE		
REV.		
DESCRIPTION		

FUNCTION: 进线柜

PROJECT: 天津渤化永利丁辛醇项目

=	I1	SHEET NO.	4
SCALE	1:1	TOTAL PAGES	11
DRAWING NO.	XZS1-48353-A01-I1-T		

REV.	DESCRIPTION	REV. DATE

This drawing and information contained thereon is the property of ABB (XIAMEN) Switchgear CO. LTD. and shall not be used, reproduced for any purpose ,or shown to third parties without the written consent of ABB (XIAMEN) Switchgear CO. LTD.

==A01=I1+-X5

备注	外引电缆	设备	线号	端子号	型号	线号	设备	外引电缆	备注
		-JHJ1:PWR1+		1	NEK4		-FCM50:4		
				2	NEK4		-JHJ2:PWR1+		
				3	NEK4		-JHJ1:PWR-		
		-FCM50:2		4	NEK4		-JHJ2:PWR-		
		-JHJ1:PWR2+		5	NEK4		-FCM51:4		
				6	NEK4		-JHJ2:PWR2+		
				7	NEK4		-JHJ1:PWR2-		
		-FCM51:2		8	NEK4		-JHJ2:PWR2-		
				9	NEK4		-KFC1:14		
				10	NEK4		-KFC1:11		
				11	NEK4		-QAB:9		
				12	NEK4		-QAB:19		
				13	NEK4		-QAB:28		
				14	NEK4		-QAB:38		
				15	NEK4		-QAB:29		
				16	NEK4		-QAB:39		
				17	NEK4		-QAB:59		
				18	NEK4		-QAB:60		
				19	NEK4		-QAB:43		
				20	NEK4		-QAB:44		
				21	NEK4		-QAB:2		
				22	NEK4		-QAB:3		
				23	NEK4		-QAB:13		
	△	-X3:18		24	NEK4		-QAB:6		
	△	-X3:23		25	NEK4		-QAB:16		
	△	=D1-X2:4		26	NEK4		-QAB:7		
	△	=D1-X2:5							
	△	=D1-X2:28		27	NEK4		-QAB:17		
	△	=D1-X2:29							
	△	=B1-X3:22		28	NEK4		-QAB:63		
	△	=B1-X3:23							
	△	=B1-X3:29		29	NEK4		-QAB:64		
	△	=B1-X3:28							
				30	NEK4		-QAB:32		
				31	NEK4		-QAB:42		
				32	NEK4		-QAB:27		
				33	NEK4		-QAB:37		
				34	NEK4		-QAB:62		
				35	NEK4		-QAB:55		
				36	NEK4		-QAB:56		
				37	NEK4		-QAB:48		
				38	NEK4		-QAB:12		
				39	NEK4		-QAB:47		
	△	=P1-X2:2		40	NEK4		-QAB:57		
	△	=P1-X2:15		41	NEK4		-QAB:58		
				42	NEK4		-KFC4:14		
				43	NEK4		-KFC4:11		
				44	NEK4		-SAM:P1/03		
				45	NEK4		-SAM:P1/04		
				46	NEK4		-JHJ1:COM		
				47	NEK4		-JHJ1:FAIL		
				48	NEK4		-JHJ1:ALM		
				49	NEK4		-JHJ2:COM		
				50	NEK4		-JHJ2:FAIL		

☆ 柜间小母线,随柜提供

△ 柜间控制电路(由客户自备)

短接排

✕ 分隔板

(测试短接片

O 其他

DRAWN	XINYU LIU	TITLE
CHECKED	Jianjun-Wang	端子图表 ==A01=I1+-X5
APPROVED	Yongsheng.Li	CONTRACT NO.: 504485024
FIRST DATE	2025/4/28	
REV. DATE		
DESCRIPTION		

FUNCTION 进线柜

PROJECT 天津渤化永利丁辛醇项目

=	I1
SCALE	1:1
SHEET NO.	5
TOTAL PAGES	11

DRAWING NO. XZS1-48353-A01-I1-T

REV.	DESCRIPTION	REV. DATE

This drawing and information contained thereon is the property of ABB (XIAMEN) Switchgear CO. LTD. and shall not be used, reproduced for any purpose ,or shown to third parties without the written consent of ABB (XIAMEN) Switchgear CO. LTD.

==A01=I1+-X5

备注	外引电缆	设备	线号	端子号	型号	线号	设备	外引电缆	备注
				51	NEK4		-JHJ2:ALM		
				52	NEK4		-BR20:4		
				53	NEK4		-BR25:V+		
				×					
				54	NEK4		-BR20:5		
				55	NEK4		-BR25:V-		
				×					
				56	NEK4				
				57	NEK4				
				58	NEK4				
				59	NEK4				
				60	NEK4				
				61	NEK4				
				62	NEK4				
				63	NEK4				
				64	NEK4				
				65	NEK4				

☆ 柜间小母线,随柜提供

△ 柜间控制电路(由客户自备)

短接排

× 分隔板

(测试短接片

O 其他

REV.	DESCRIPTION	REV. DATE		
			DRAWN	XINYU LIU
			CHECKED	Jianjun-Wang
			APPROVED	Yongsheng.Li
			FIRST DATE	2025/4/28

TITLE: 端子图表 ==A01=I1+-X5

CONTRACT NO.: 504485024

FUNCTION: 进线柜

PROJECT: 天津渤化永利丁辛醇项目

=	I1	SHEET NO.	5a
SCALE	1:1	TOTAL PAGES	11

DRAWING NO. XZS1-48353-A01-I1-T

==A01=I1+-X6

备注	外引电缆	设备	线号	端子号	型号	线号	设备	外引电缆	备注
		-FCM69:2		1	NEK4		-PWS:9		
		-FCM69:4		2	NEK4		-PWS:10		
		-FCM69:6		3	NEK4		-PWS:11		
		-FCM66:2		4	NEK4		-PGW:2		
		-FCM66:4		5	NEK4		-PGW:5		
		-FCM66:6		6	NEK4		-PGW:8		

☆ 柜间小母线,厢柜提供

△ 柜间控制电路(由客户自备)

短接排

分隔板

测试短接片

其他

This drawing and information contained thereon is the property of ABB (XIAMEN) Switchgear CO. LTD. and shall not be used, reproduced for any purpose ,or shown to third parties without the written consent of ABB (XIAMEN) Switchgear CO.LTD.

REV.	DESCRIPTION	REV. DATE

DRAWN	XINYU LIU	TITLE	端子图表 ==A01=I1+-X6
CHECKED	Jianjun-Wang		
APPROVED	Yongsheng.Li	CONTRACT NO.:	504485024
FIRST DATE	2025/4/28		

FUNCTION: 进线柜

PROJECT: 天津渤化永利丁辛醇项目

= I1 | SCALE 1:1 | SHEET NO 6 | TOTAL PAGES 11

DRAWING NO XZS1-48353-A01-I1-T

REV.	DESCRIPTION	REV. DATE

This drawing and information contained thereon is the property of ABB (XIAMEN) Switchgear CO. LTD. and shall not be used, reproduced for any purpose ,or shown to third parties without the written consent of ABB (XIAMEN) Switchgear CO. LTD.

==A01=I1+-X9

备注	外引电缆	设备	线号	端子号	型号	线号	设备	外引电缆	备注
				1	NEK4		-EB2:1		
		-FCM90:2		2	NEK4		-BGD1:1		
				3	NEK4		-EB2:2		
		-X1:20		4	NEK4		-EA1:A2		
		-EA1:A1		5	RCT4SW		-BGD1:2		

☆ 柜间小母线,随柜提供

△ 柜间控制电路(由客户自备)

短接排

分隔板

(测试短接片

O 其他

REV.	DESCRIPTION	REV. DATE

DRAWN	XINYU LIU	TITLE
CHECKED	Jianjun-Wang	端子图表 ==A01=I1+-X9
APPROVED	Yongsheng.Li	CONTRACT NO.:
FIRST DATE	2025/4/28	504485024

FUNCTION 进线柜

PROJECT 天津渤化永利丁辛醇项目

=	I1	SHEET NO. 7
SCALE	1:1	TOTAL PAGES 11
DRAWING NO.	XZS1-48353-A01-I1-T	

REV.	DESCRIPTION	REV. DATE

This drawing and information contained thereon is the property of ABB (XIAMEN) Switchgear CO. LTD. and shall not be used, reproduced for any purpose ,or shown to third parties without the written consent of ABB (XIAMEN) Switchgear CO. LTD.

==A01=I1+-X11

备注	外引电缆	设备	线号	端子号	型号	线号	设备	外引电缆	备注
6黑色	☆	-X11.2:1		1	A3C 6		-X1:17		6黑色
6黑色	☆	-X11.1:1							
6黑色	☆	-X11.2:2		2	A3C 6		-FCM901:4		6黑色
6黑色	☆	-X11.1:2							
6黑色	☆	-X11.2:3		3	A3C 6		-FCM901:6		6黑色
6黑色	☆	-X11.1:3							
6黑色	☆	-X11.2:4		4	A3C 6		-X1:19		6黑色
6黑色	☆	-X11.1:4							
6黑色	☆	-X11.2:5		5	A3C 6		-X1:9		6黑色
6黑色	☆	-X11.1:5							
6黑色	☆	-X11.2:6		6	A3C 6		-X1:11		6黑色
6黑色	☆	-X11.1:6							
6黑色	☆	-X11.2:7		7	A3C 6		-X1:13		6黑色
6黑色	☆	-X11.1:7							
6黑色	☆	-X11.2:8		8	A3C 6		-X1:15		6黑色
6黑色	☆	-X11.1:8							

☆ 柜间小母线,随柜提供

△ 柜间控制电路(由客户自备)

短接排

✕ 分隔板

(测试短接片

O 其他

DRAWN	XINYU LIU	TITLE
CHECKED	Jianjun-Wang	
APPROVED	Yongsheng.Li	CONTRACT NO.:
FIRST DATE	2025/4/28	504485024
REV. DATE		
DESCRIPTION		
REV.		

端子图表 ==A01=I1+-X11

FUNCTION 进线柜

PROJECT 天津渤化永利丁辛醇项目

=	I1	SCALE 1:1	SHEET NO. 8
DRAWING NO. XZS1-48353-A01-I1-T			TOTAL PAGES 11

REV.	DESCRIPTION	REV. DATE

This drawing and information contained thereon is the property of ABB (XIAMEN) Switchgear CO. LTD. and shall not be used, reproduced for any purpose ,or shown to third parties without the written consent of ABB (XIAMEN) Switchgear CO. LTD.

==A01=I1+-X13

备注	外引电缆	设备	线号	端子号	型号	线号	设备	外引电缆	备注
	☆	-X13.1:1		1	A4C 4		-FCM69:1		
	☆	-X13.2:1							
	☆	-X13.1:2		2	A4C 4		-FCM69:3		
	☆	-X13.2:2							
	☆	-X13.1:3		3	A4C 4		-FCM69:5		
	☆	-X13.2:3							
	☆	-X13.1:4		4	A4C 4		-PWS:12		
	☆	-X13.2:4							
	☆	-X13.1:5		5	A4C 4				
	☆	-X13.2:5							
	☆	-X13.1:6		6	A4C 4				
	☆	-X13.2:6							
	☆	-X13.3:7		7	A4C 4		-FCM66:1		
	☆	-X13.4:7							
	☆	-X13.3:8		8	A4C 4		-FCM66:3		
	☆	-X13.4:8							
	☆	-X13.3:9		9	A4C 4		-FCM66:5		
	☆	-X13.4:9							
	☆	-X13.3:10		10	A4C 4				
	☆	-X13.4:10							

☆ 柜间小母线,随柜提供

△ 柜间控制电路(由客户自备)

短接排

分隔板

(测试短接片

O 其他

DRAWN	XINYU LIU	TITLE
CHECKED	Jianjun-Wang	端子图表 ==A01=I1+-X13
APPROVED	Yongsheng.Li	CONTRACT NO.:
FIRST DATE	2025/4/28	504485024
REV. DATE		
DESCRIPTION		
REV.		

FUNCTION 进线柜

PROJECT 天津渤化永利丁辛醇项目

=	I1	SHEET NO. 9
SCALE	1:1	TOTAL PAGES 11
DRAWING NO.	XZS1-48353-A01-I1-T	

REV.	DESCRIPTION	REV. DATE

This drawing and information contained thereon is the property of ABB (XIAMEN) Switchgear CO. LTD. and shall not be used, reproduced for any purpose ,or shown to third parties without the written consent of ABB (XIAMEN) Switchgear CO. LTD.

==A01=I1+-X14

备注	外引电缆	设备	线号	端子号	型号	线号	设备	外引电缆	备注
	☆	-X14:2		1	NEK4		-BR20:10		
	☆	-X14:1		2	NEK4				
	☆	-X14:4		3	NEK4		-BR20:9		
	☆	-X14:3		4	NEK4				
	☆	-X14:6		5	NEK4		-ST1		
	☆	-X14:5		6	NEK4				
	☆	-X14:8		7	NEK4		-PGW:25		
	☆	-X14:7		8	NEK4				
	☆	-X14:10		9	NEK4		-PGW:26		
	☆	-X14:9		10	NEK4				
	☆	-X14:12		11	NEK4		-ST1		
	☆	-X14:11		12	NEK4				
				13	NEK4		-SAM:P1/01		
				14	NEK4		-SAM:P1/02		
				15	NEK4		-BR20:7		
				16	NEK4		-BR25:A		
				17	NEK4		-BR20:6		屏蔽双绞线
				18	NEK4		-BR25:B		

☆ 柜间小母线,随柜提供

△ 柜间控制电路(由客户自备)

短接排

分隔板

(测试短接片

O 其他

DRAWN	XINYU LIU
CHECKED	Jianjun-Wang
APPROVED	Yongsheng.Li
FIRST DATE	2025/4/28
REV. DATE	
REV.	
DESCRIPTION	

TITLE: 端子图表 ==A01=I1+-X14

CONTRACT NO.: 504485024

FUNCTION: 进线柜

PROJECT: 天津渤化永利丁辛醇项目

=	I1
SCALE	1:1
SHEET NO.	10
TOTAL PAGES	11
DRAWING NO.	XZS1-48353-A01-I1-T

单线图

一次设备索引			
设备号	设备名称	数量	物料号
-QAB	真空断路器	1	VD4/P-99-R-504206785
-BCT1	电流互感器	1	CTA-G8L314-0020
-BCT2	电流互感器	1	CTA-G8L314-0020
-BCT3	电流互感器	1	CTA-G8L314-0020
-BAD	电容分压装置	3	DIK-06-B06N1000C

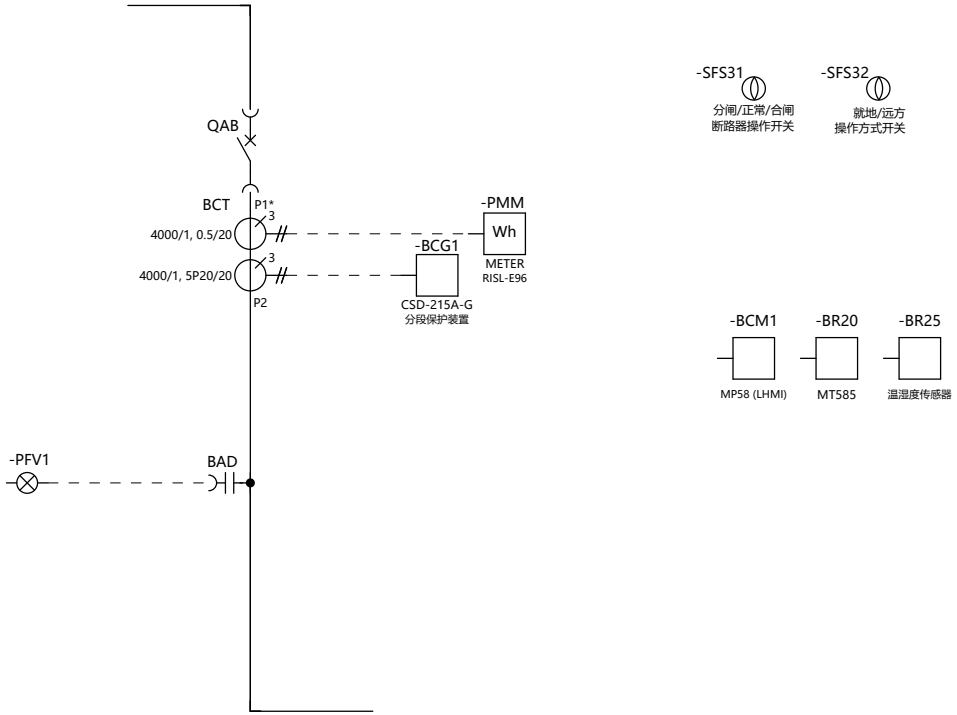

This drawing and information contained thereon is the property of ABB (XIAMEN) Switchgear CO. LTD. and shall not be used, reproduced for any purpose ,or shown to third parties without the written consent of ABB (XIAMEN) Switchgear CO. LTD.

REV.	DESCRIPTION	REV. DATE

DRAWN	XINYU LIU	TITLE	单线图
CHECKED	Jianjun-Wang		
APPROVED	Yongsheng.Li	CONTRACT NO.:	504485024
FIRST DATE	2025/4/28		

FUNCTION: 母联柜

PROJECT: 天津渤化永利丁辛醇项目

= B1 | SHEET NO 1
SCALE 1:1 | TOTAL PAGES 14
DRAWING NO XZS1-48353-A01-B1-S

断路器弹簧储能电机回路	控制回路	保护与信号回路		加热器回路 电缆室 100W	低压室照明

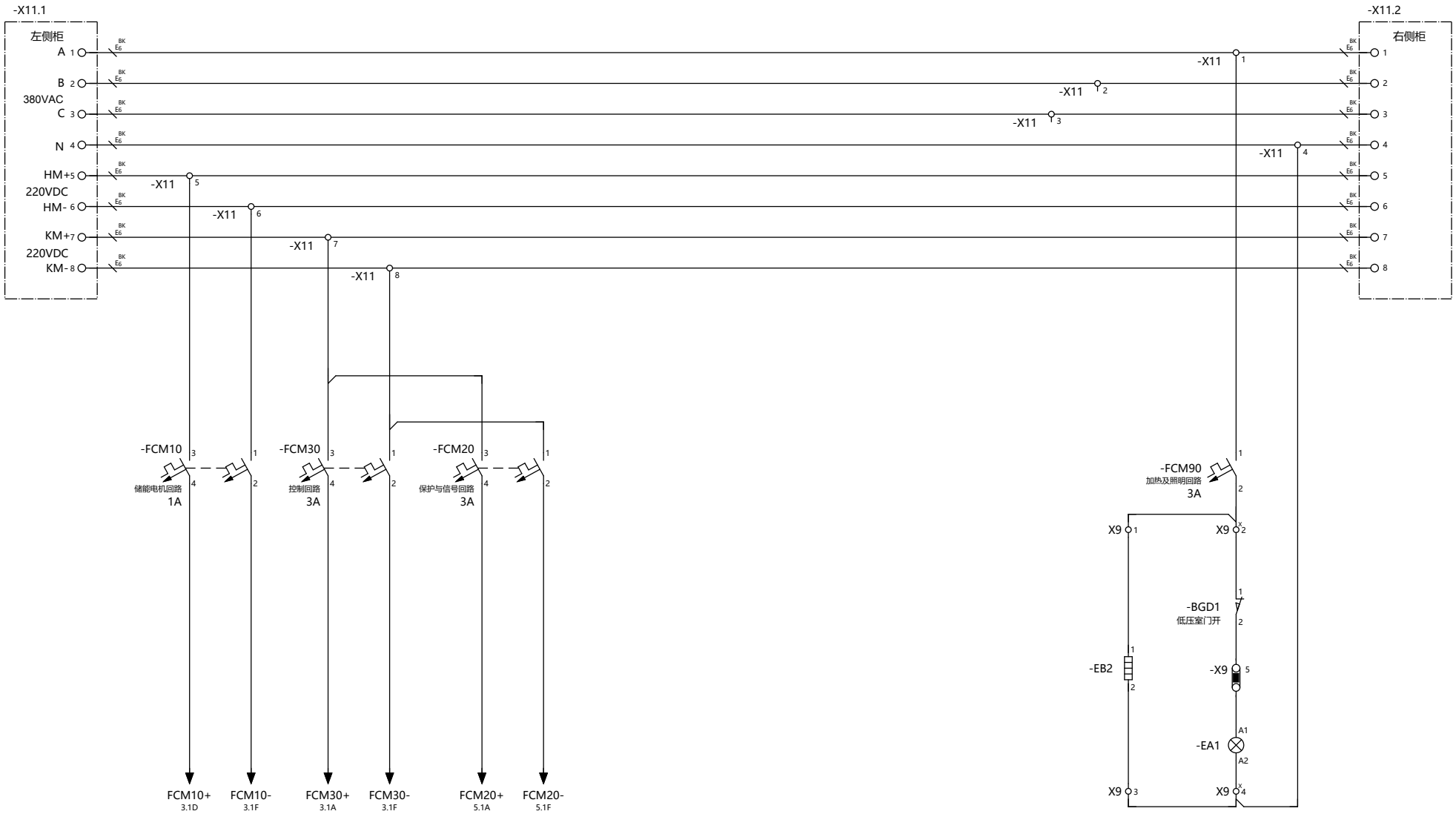

This drawing and information contained thereon is the property of ABB (XIAMEN) Switchgear CO. LTD. and shall not be used, reproduced for any purpose ,or shown to third parties without the written consent of ABB (XIAMEN) Switchgear CO. LTD.

REV.	DESCRIPTION	REV. DATE

DRAWN	XINYU LIU	TITLE	电源小母线回路
CHECKED	Jianjun-Wang		
APPROVED	Yongsheng.Li	CONTRACT NO.:	504485024
FIRST DATE	2025/4/28		

ABB

FUNCTION	母联柜
PROJECT	天津渤化永利丁辛醇项目

=	B1	SHEET NO	2
SCALE	1:1	TOTAL PAGES	14
DRAWING NO	XZS1-48353-A01-B1-S		

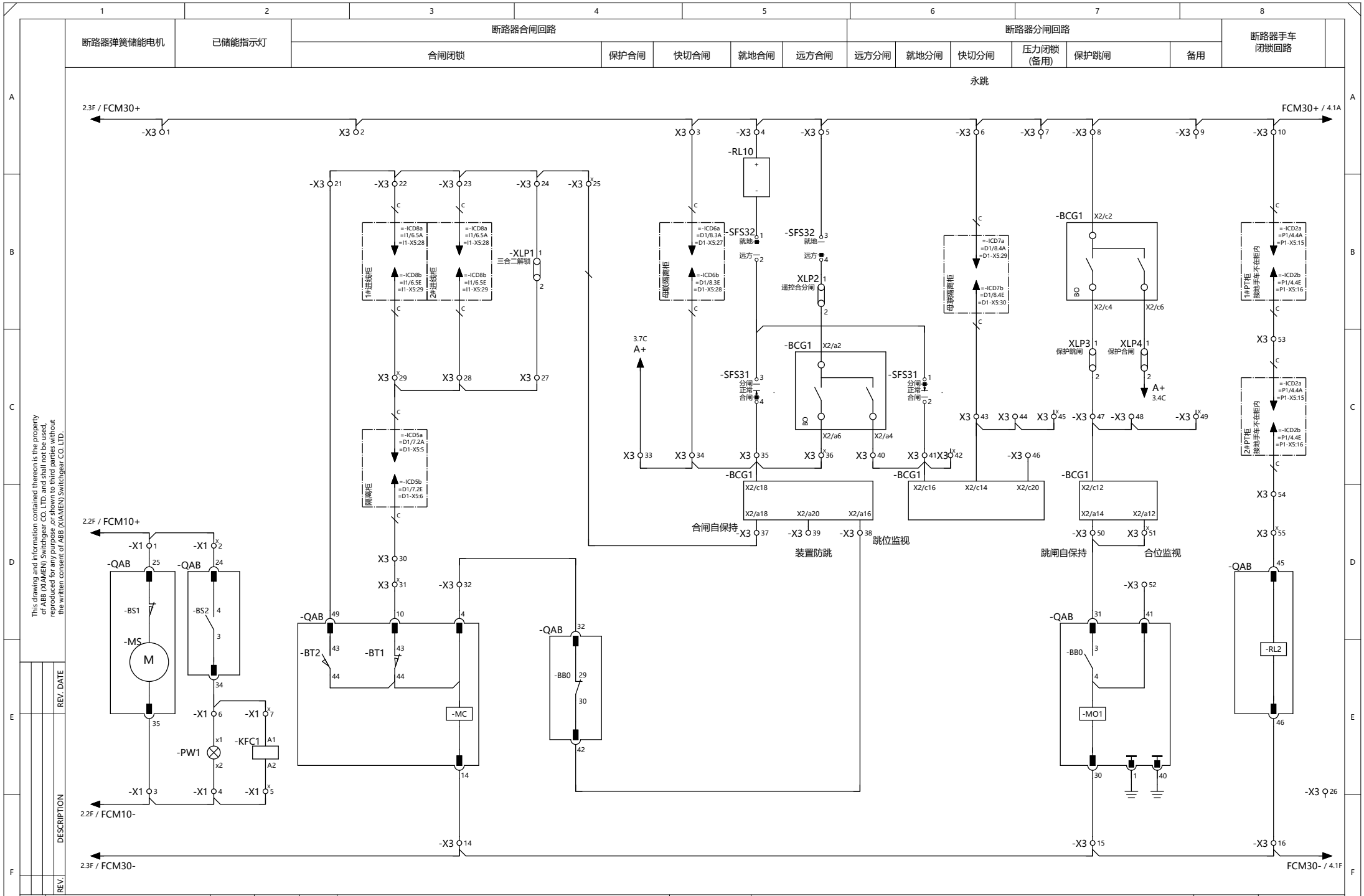

This drawing and information contained thereon is the property of ABB (XIAMEN) Switchgear CO. LTD. and shall not be used, reproduced for any purpose, or shown to third parties without the written consent of ABB (XIAMEN) Switchgear CO. LTD.

REV.	DESCRIPTION	REV. DATE

DRAWN	XINYU LIU	TITLE	控制回路
CHECKED	Jianjun-Wang		
APPROVED	Yongsheng.Li	CONTRACT NO.:	504485024
FIRST DATE	2025/4/28		

FUNCTION: 母联柜

PROJECT: 天津渤化永利丁辛醇项目

= B1 | SCALE 1:1 | SHEET NO 3 | TOTAL PAGES 14

DRAWING NO XZS1-48353-A01-B1-S

保护操作电源	带电显示及其闭锁回路

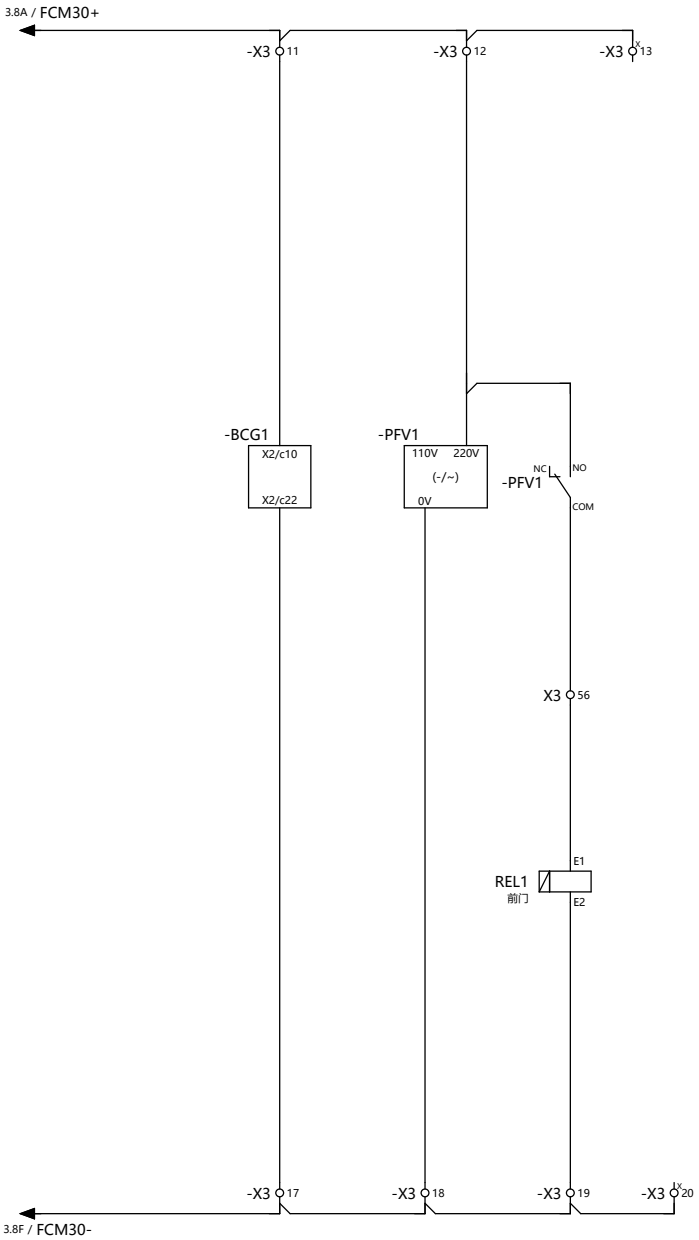

This drawing and information contained thereon is the property of ABB (XIAMEN) Switchgear CO. LTD. and shall not be used, reproduced for any purpose ,or shown to third parties without the written consent of ABB (XIAMEN) Switchgear CO. LTD.

REV.	DESCRIPTION	REV. DATE

DRAWN	XINYU LIU	TITLE	控制回路
CHECKED	Jianjun-Wang		
APPROVED	Yongsheng.Li	CONTRACT NO.:	504485024
FIRST DATE	2025/4/28		

FUNCTION: 母联柜

PROJECT: 天津渤化永利丁辛醇项目

= B1 | SHEET NO 4

SCALE 1:1 | TOTAL PAGES 14

DRAWING NO XZS1-48353-A01-B1-S

断路器状态		断路器手车位置		MT585电源	多功能表电源	保护装置辅助电源
合闸	分闸	工作	试验			

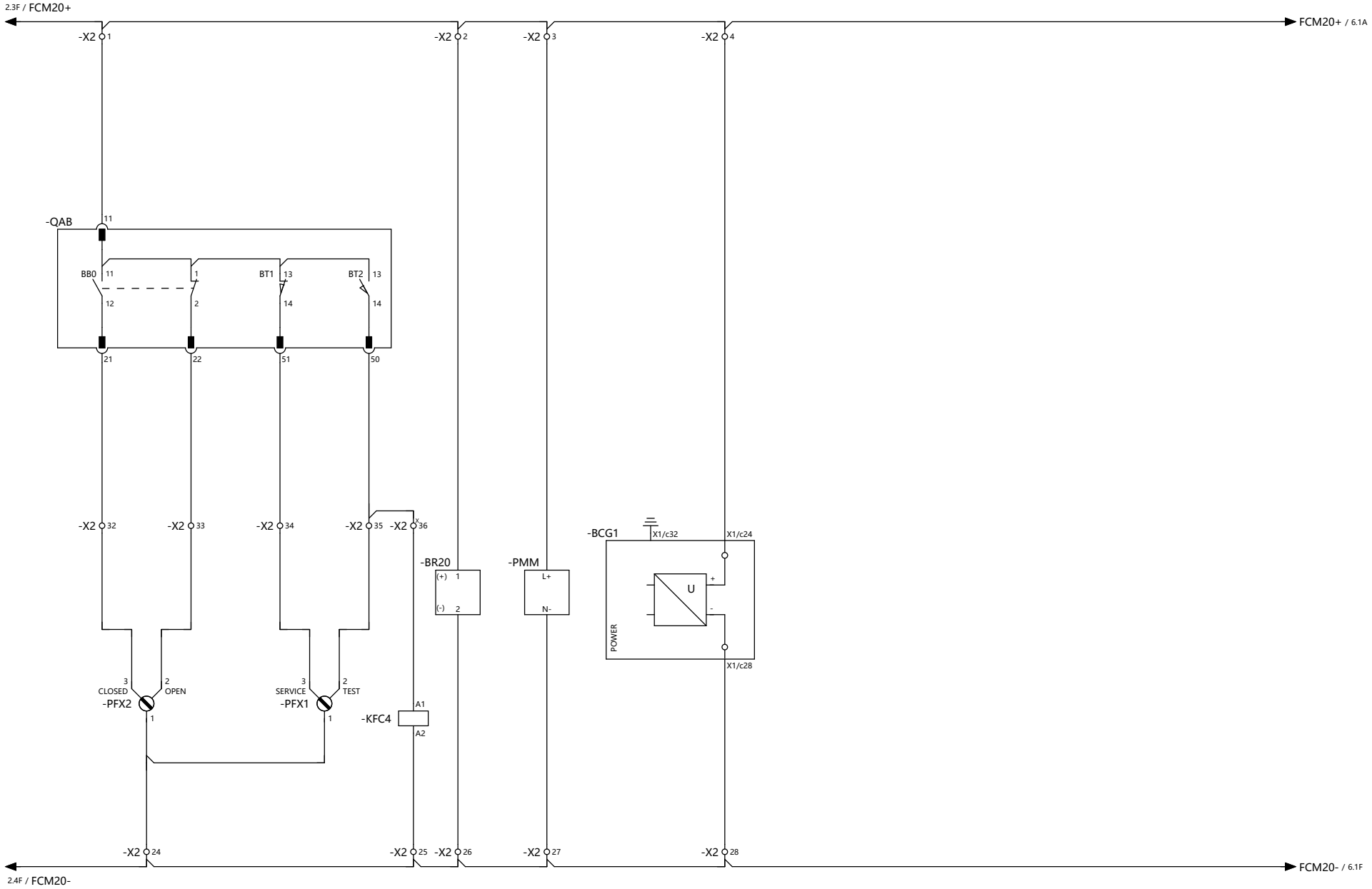

This drawing and information contained thereon is the property of ABB (XIAMEN) Switchgear CO. LTD. and shall not be used, reproduced for any purpose ,or shown to third parties without the written consent of ABB (XIAMEN) Switchgear CO. LTD.

REV.	DESCRIPTION	REV. DATE

DRAWN	XINYU LIU	TITLE	保护与信号回路
CHECKED	Jianjun-Wang		
APPROVED	Yongsheng.Li	CONTRACT NO.:	504485024
FIRST DATE	2025/4/28		

ABB

FUNCTION	母联柜
PROJECT	天津渤化永利丁辛醇项目

=	B1	SHEET NO	5
SCALE	1:1	TOTAL PAGES	14
DRAWING NO	XZS1-48353-A01-B1-S		

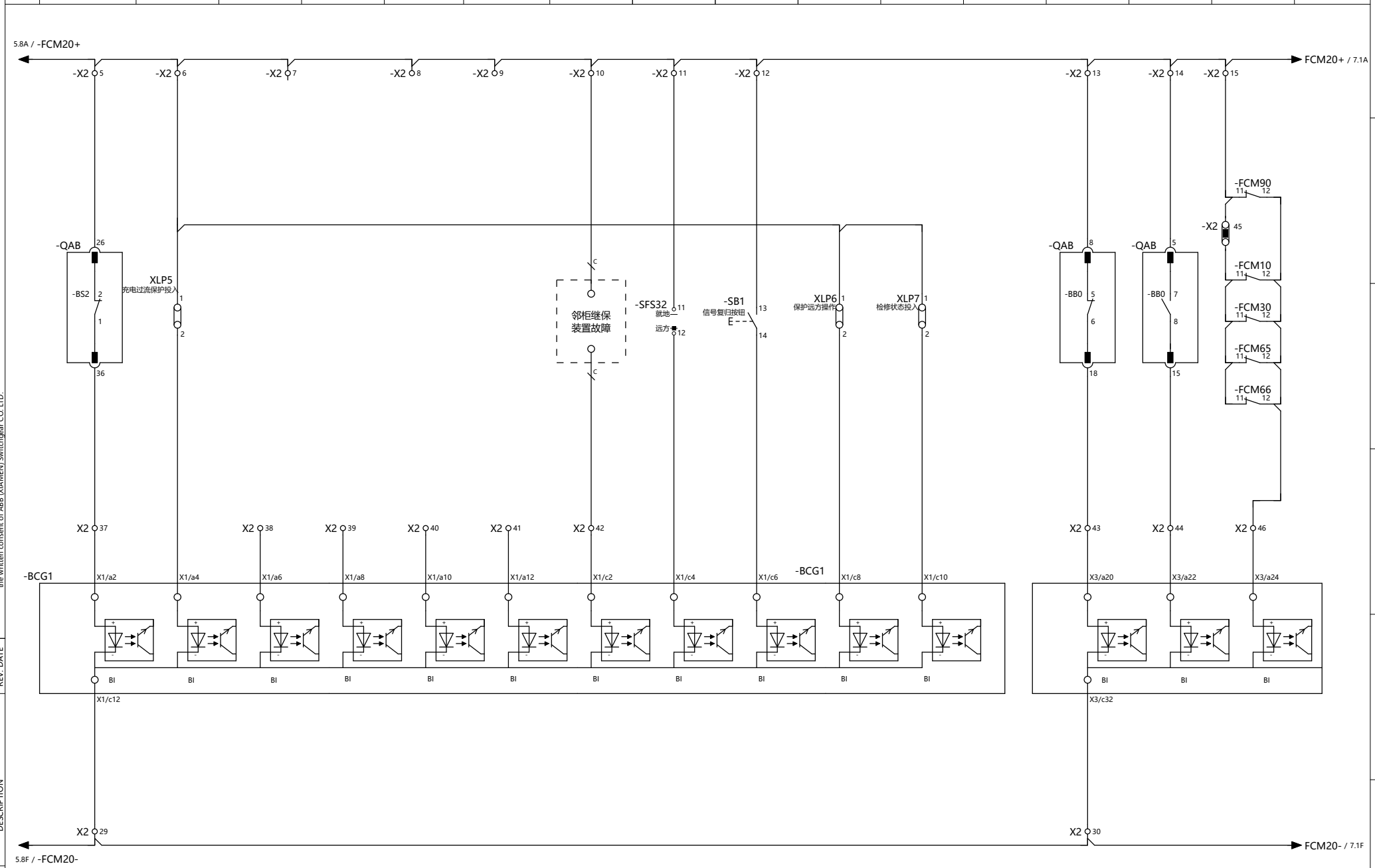

This drawing and information contained thereon is the property of ABB (XIAMEN) Switchgear CO. LTD. and shall not be used, reproduced for any purpose ,or shown to third parties without the written consent of ABB (XIAMEN) Switchgear CO. LTD.

REV.	DESCRIPTION	REV. DATE

DRAWN	XINYU LIU	TITLE	保护与信号回路
CHECKED	Jianjun-Wang		
APPROVED	Yongsheng.Li	CONTRACT NO.:	504485024
FIRST DATE	2025/4/28		

ABB

FUNCTION	母联柜
PROJECT	天津渤化永利丁辛醇项目

=	B1	SHEET NO	6
SCALE	1:1	TOTAL PAGES	14
DRAWING NO	XZS1-48353-A01-B1-S		

断路器手车位置		隔离手车位置		备用
工作	试验	工作	试验	

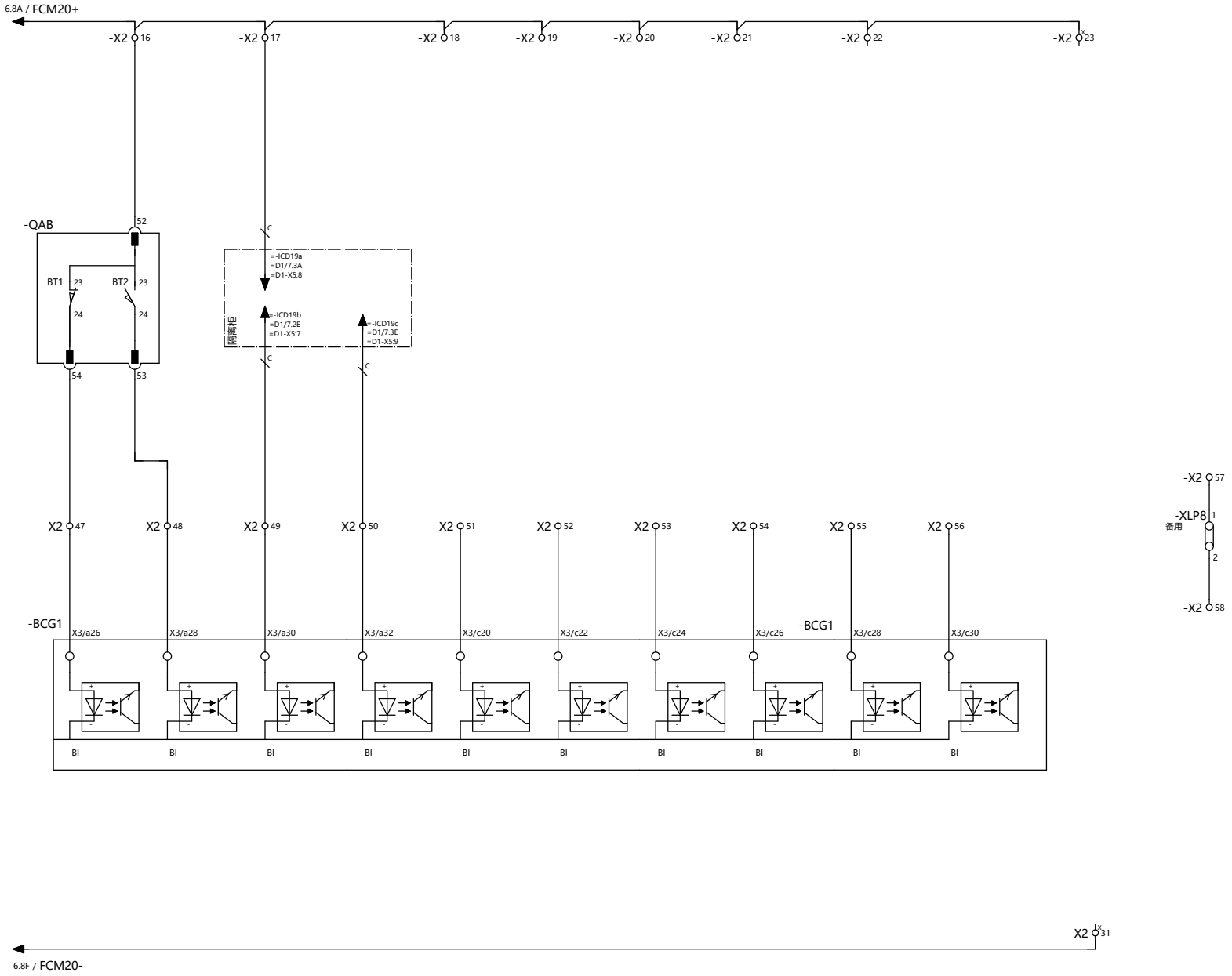

This drawing and information contained thereon is the property of ABB (XIAMEN) Switchgear CO. LTD. and shall not be used, reproduced for any purpose ,or shown to third parties without the written consent of ABB (XIAMEN) Switchgear CO. LTD.

REV.	DESCRIPTION	REV. DATE

DRAWN	XINYU LIU	TITLE	保护与信号回路
CHECKED	Jianjun-Wang		
APPROVED	Yongsheng.Li	CONTRACT NO.:	504485024
FIRST DATE	2025/4/28		

ABB

FUNCTION	母联柜
PROJECT	天津渤化永利丁辛醇项目

=	B1	SHEET NO	7
SCALE	1:1	TOTAL PAGES	14
DRAWING NO	XZS1-48353-A01-B1-S		

断路器已储能	断路器状态				断路器手车位置	
	合闸	分闸	合闸	分闸	工作	试验

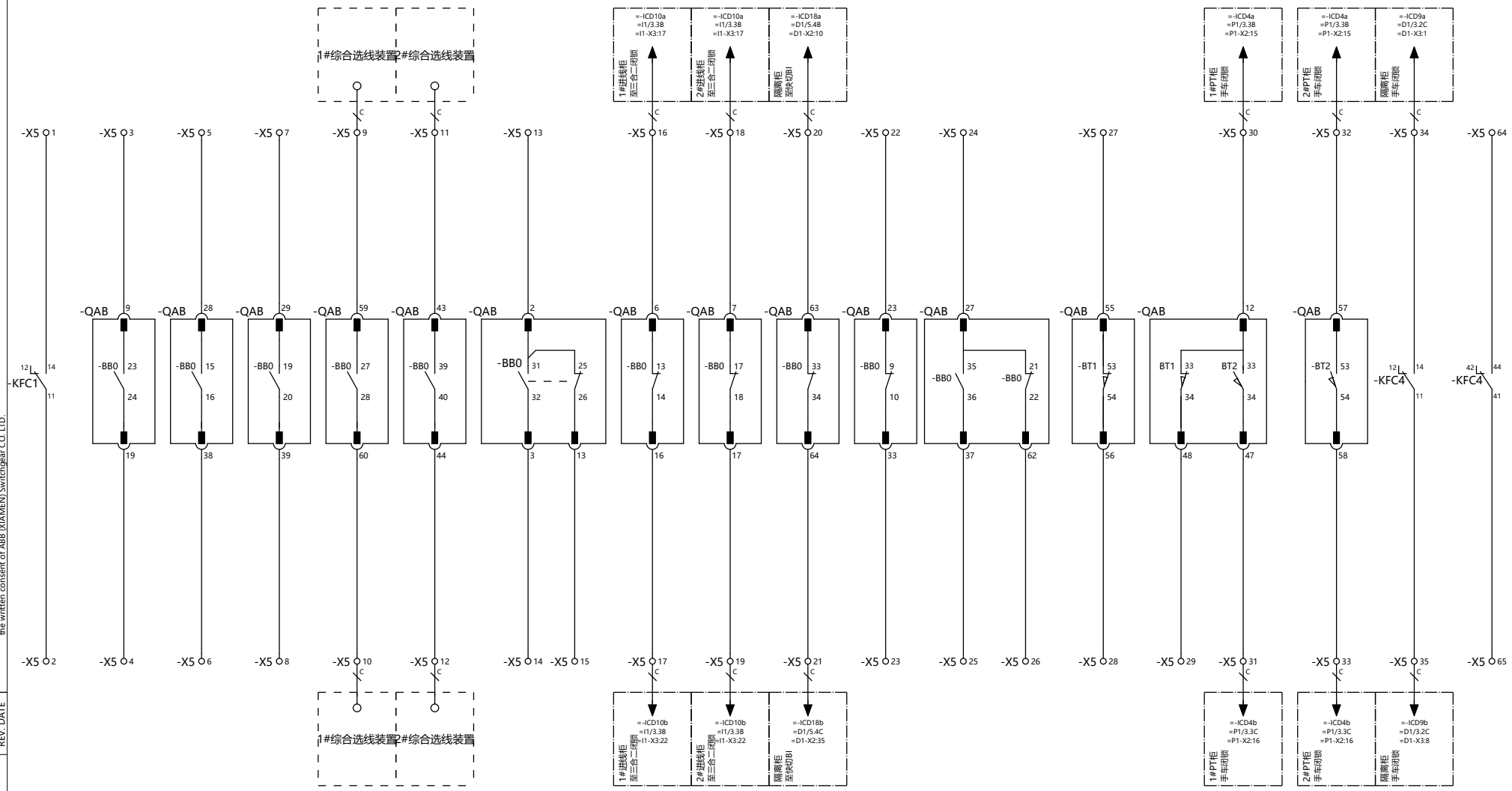

This drawing and information contained thereon is the property of ABB (XIAMEN) Switchgear CO. LTD. and shall not be used, reproduced for any purpose ,or shown to third parties without the written consent of ABB (XIAMEN) Switchgear CO. LTD.

REV.	DESCRIPTION	REV. DATE

DRAWN	XINYU LIU	TITLE	备用回路
CHECKED	Jianjun-Wang		
APPROVED	Yongsheng.Li	CONTRACT NO.:	504485024
FIRST DATE	2025/4/28		

ABB

FUNCTION	母联柜
PROJECT	天津渤化永利丁辛醇项目

=	B1	SHEET NO	8
SCALE	1:1	TOTAL PAGES	14
DRAWING NO	XZS1-48353-A01-B1-S		

就地/远方选择开关位置		保护空开信号	事故总信号	控制回路断线	非保持信号			
就地	远方				重合闸动作	保护动作	运行异常告警	装置故障告警

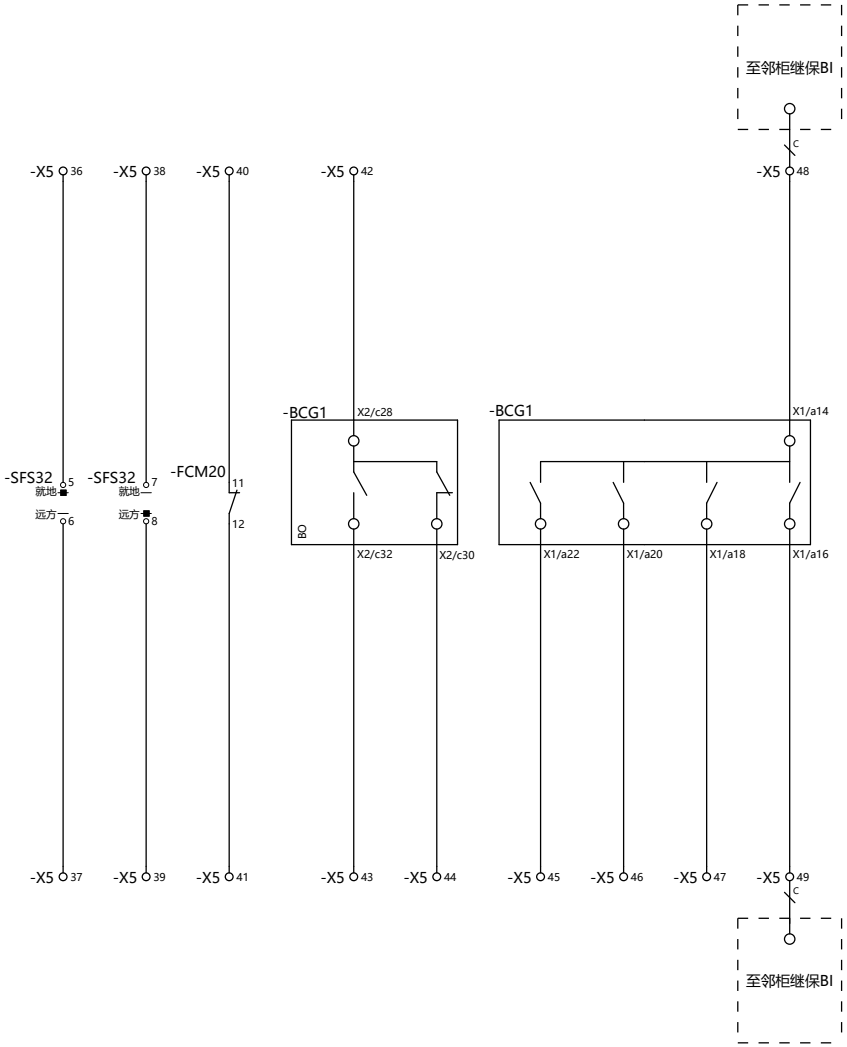

-X5 54 -X5 55 -X5 56 -X5 57 -X5 58

-X5 59 -X5 60 -X5 61 -X5 62 -X5 63

This drawing and information contained thereon is the property of ABB (XIAMEN) Switchgear CO. LTD. and shall not be used, reproduced for any purpose ,or shown to third parties without the written consent of ABB (XIAMEN) Switchgear CO. LTD.

REV.	DESCRIPTION	REV. DATE

DRAWN	XINYU LIU	TITLE	备用回路
CHECKED	Jianjun-Wang		
APPROVED	Yongsheng.Li	CONTRACT NO.:	504485024
FIRST DATE	2025/4/28		

ABB

FUNCTION	母联柜
PROJECT	天津渤化永利丁辛醇项目

=	B1	SHEET NO	9
SCALE	1:1	TOTAL PAGES	14
DRAWING NO	XZS1-48353-A01-B1-S		

通讯小母线	保护对时口	多功能表485通讯

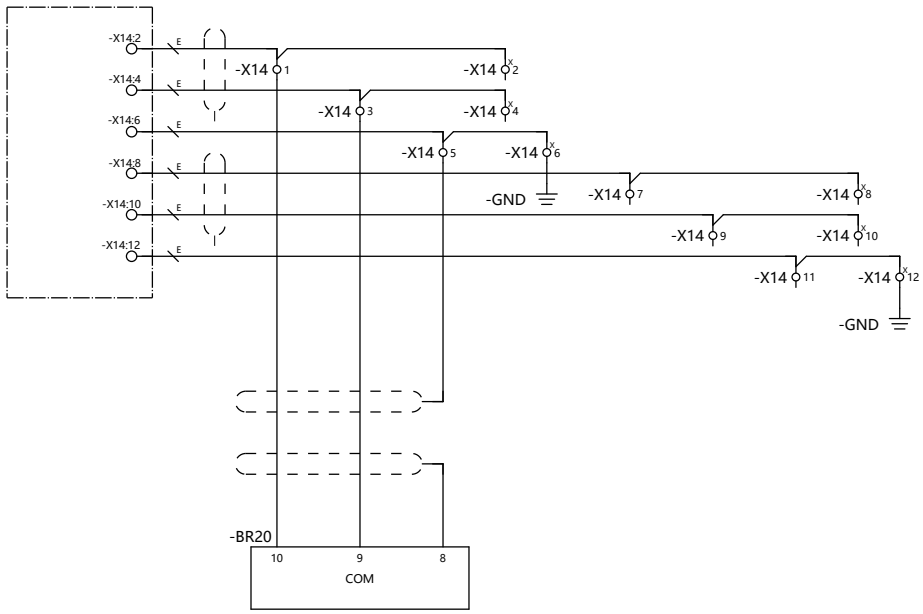

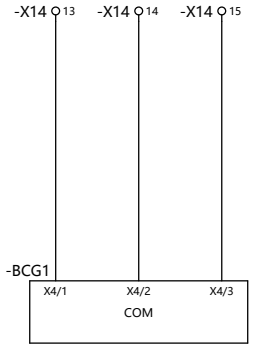

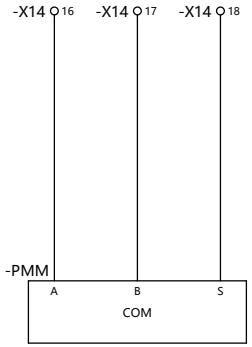

This drawing and information contained thereon is the property of ABB (XIAMEN) Switchgear CO. LTD. and shall not be used, reproduced for any purpose ,or shown to third parties without the written consent of ABB (XIAMEN) Switchgear CO. LTD.

REV.	DESCRIPTION	REV. DATE

DRAWN	XINYU LIU	TITLE	通信回路
CHECKED	Jianjun-Wang		
APPROVED	Yongsheng.Li	CONTRACT NO.:	504485024
FIRST DATE	2025/4/28		

FUNCTION	母联柜
PROJECT	天津渤化永利丁辛醇项目

=	B1	SHEET NO	10
SCALE	1:1	TOTAL PAGES	14
DRAWING NO	XZS1-48353-A01-B1-S		

MT585 24VDC输出	温湿度控制电源	MT585通讯接口 (与MB585通讯接口)	温湿度控制器通讯	HMI 电源及通讯 示意图

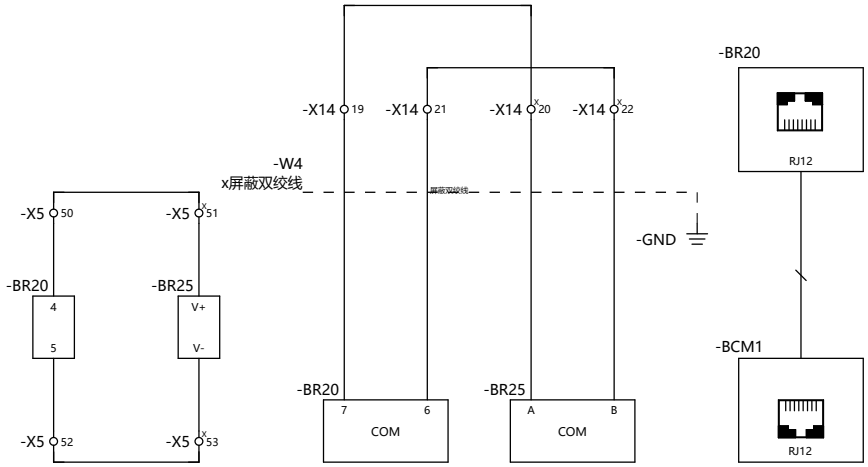

This drawing and information contained thereon is the property of ABB (XIAMEN) Switchgear CO. LTD. and shall not be used, reproduced for any purpose ,or shown to third parties without the written consent of ABB (XIAMEN) Switchgear CO. LTD.

REV.	DESCRIPTION	REV. DATE

DRAWN	XINYU LIU	TITLE	通信回路
CHECKED	Jianjun-Wang		
APPROVED	Yongsheng.Li	CONTRACT NO.:	504485024
FIRST DATE	2025/4/28		

FUNCTION: 母联柜

PROJECT: 天津渤化永利丁辛醇项目

= B1 | SHEET NO 11

SCALE 1:1 | TOTAL PAGES 14

DRAWING NO XZS1-48353-A01-B1-S

电压小母线

计量小母线

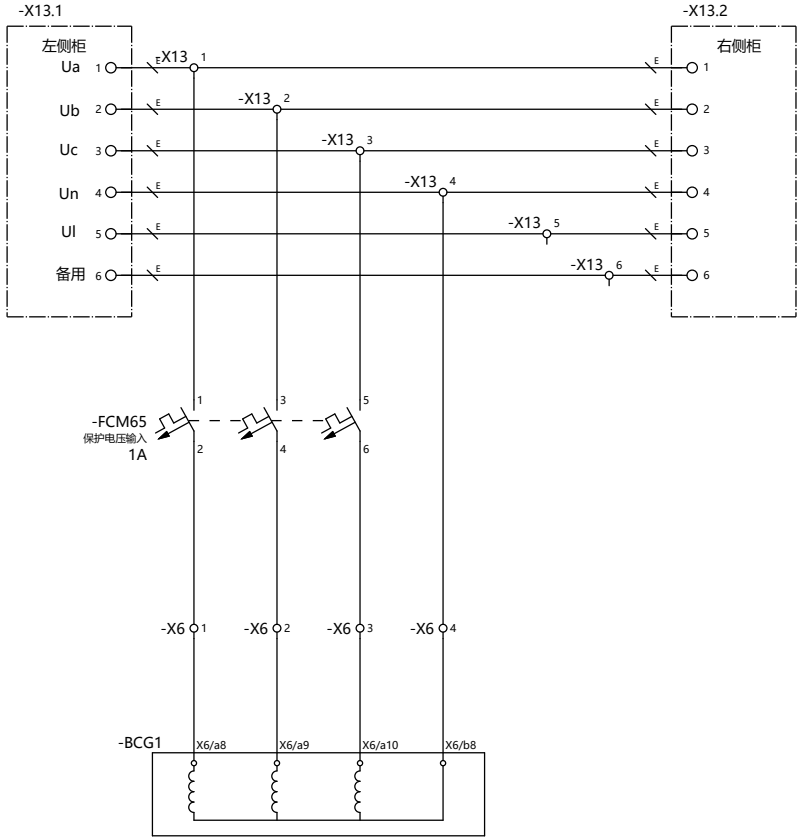

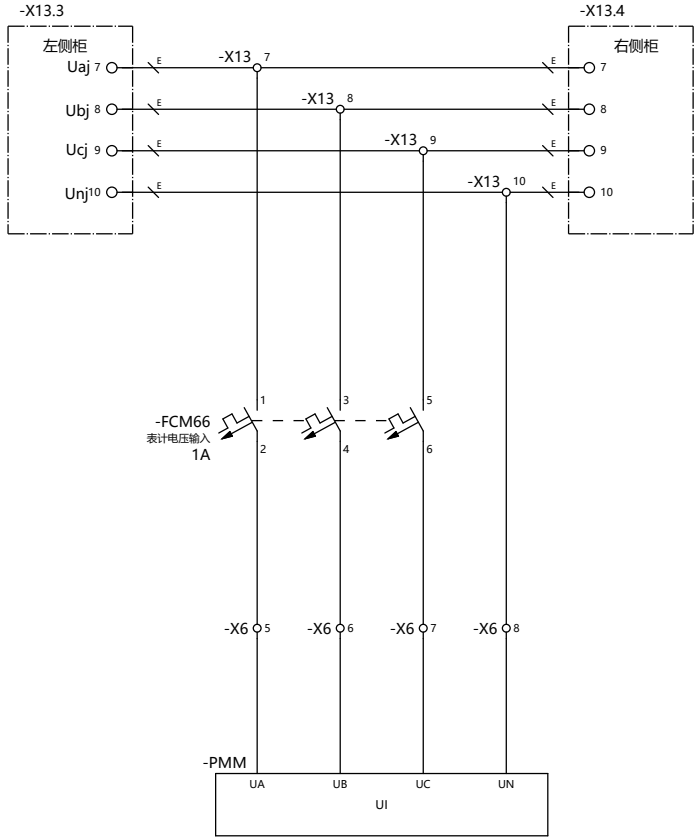

This drawing and information contained thereon is the property of ABB (XIAMEN) Switchgear CO. LTD. and shall not be used, reproduced for any purpose, or shown to third parties without the written consent of ABB (XIAMEN) Switchgear CO. LTD.

REV.	DESCRIPTION	REV. DATE

DRAWN	XINYU LIU	TITLE	电压小母线
CHECKED	Jianjun-Wang		
APPROVED	Yongsheng.Li	CONTRACT NO.:	504485024
FIRST DATE	2025/4/28		

FUNCTION: 母联柜

PROJECT: 天津渤化永利丁辛醇项目

= B1 | SHEET NO 12

SCALE 1:1 | TOTAL PAGES 14

DRAWING NO XZS1-48353-A01-B1-S

测量电流输入

保护电流输入

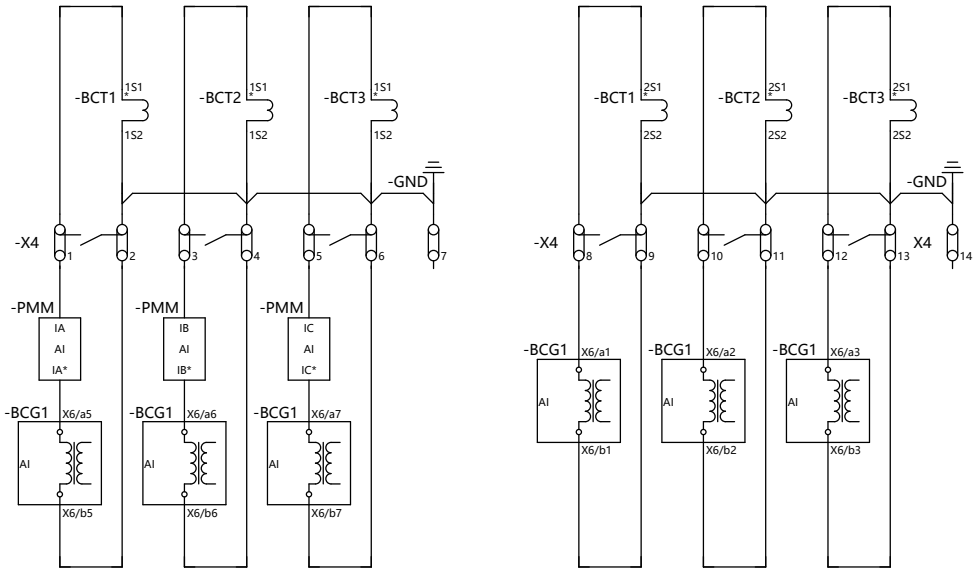

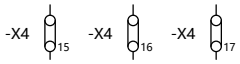

This drawing and information contained thereon is the property of ABB (XIAMEN) Switchgear CO. LTD. and shall not be used, reproduced for any purpose ,or shown to third parties without the written consent of ABB (XIAMEN) Switchgear CO. LTD.

REV.	DESCRIPTION	REV. DATE

DRAWN	XINYU LIU	TITLE	电流回路
CHECKED	Jianjun-Wang		
APPROVED	Yongsheng.Li	CONTRACT NO.:	504485024
FIRST DATE	2025/4/28		

FUNCTION: 母联柜

PROJECT: 天津渤化永利丁辛醇项目

= B1 | SHEET NO 13

SCALE 1:1 | TOTAL PAGES 14

DRAWING NO XZS1-48353-A01-B1-S

VD4

-QAB

VD4/P-99-R-504206785

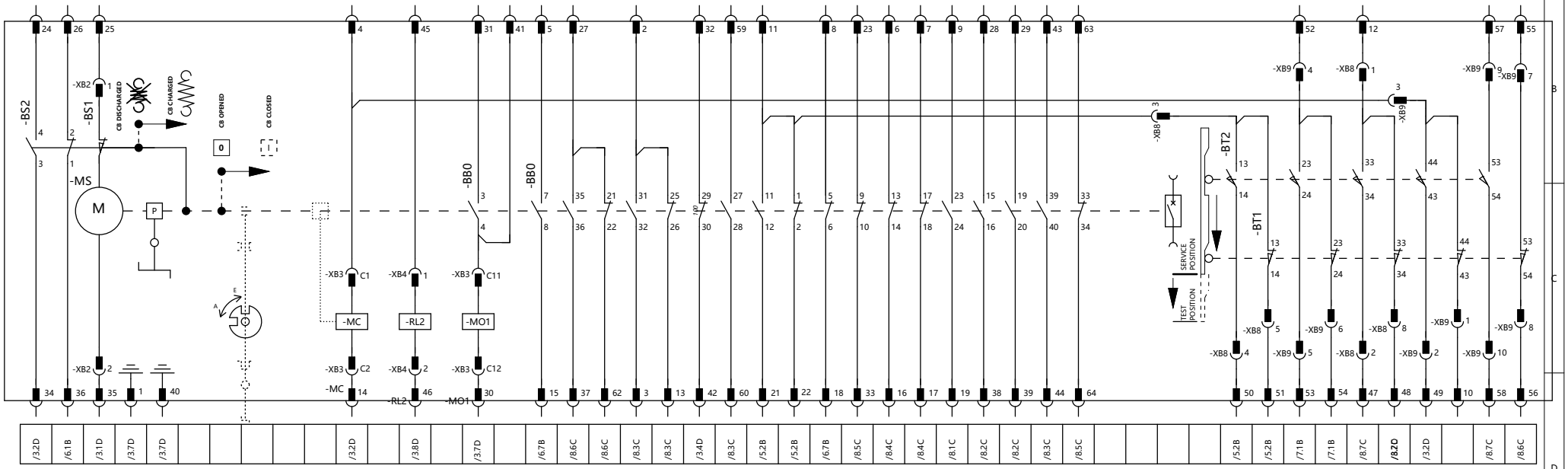

名称	描述	备注
-MS	弹簧操作机构储能电机	
-BS1	储能电机限位开关	
-MC	合闸脱扣器	
-RL2	手车闭锁电磁铁	
-MO1	第一分闸脱扣器	

名称	描述	备注
-BS2	合闸弹簧储能/未储能信号触点	
-BB0	与断路器主轴联动的辅助开关	
-BT1	限位开关(手车位于运行位置)	
-BT2	限位开关(手车位于试验位置)	

接地开关与断路器手车具有可靠的机械闭锁：
a) 只有当断路器手车位于试验位置时，才允许操作接地开关
b) 只有当接地开关处于分状态时,断路器手车才允许由试验位置推入运行位置。

电气控制接线图/接点位置参考：
此图所示状态为：断路器手车工作位置 断路器处于分闸状态 操作机构弹簧未储能

This drawing and information contained thereon is the property of ABB (XIAMEN) Switchgear CO. LTD. and shall not be used, reproduced for any purpose ,or shown to third parties without the written consent of ABB (XIAMEN) Switchgear CO. LTD.

REV.	DESCRIPTION	REV. DATE

DRAWN	XINYU LIU	TITLE	断路器接线图
CHECKED	Jianjun-Wang		
APPROVED	Yongsheng.Li	CONTRACT NO.:	504485024
FIRST DATE	2025/4/28		

ABB

FUNCTION	母联柜
PROJECT	天津渤化永利丁辛醇项目

= B1	SHEET NO 14
SCALE 1:1	TOTAL PAGES 14
DRAWING NO	XZS1-48353-A01-B1-S

设备清单(柜体)

序号	设备号	设备名称	物料号	数量	制造商	型号	设备参数
1	-BAD	电容分压装置	DIK-06-B06N1000C	3	ABB	B06N-1000C	Un=7.2kV
2	-BCT1	电流互感器	CTA-G8L314-0020	1	ABB	LMZB1-10	31.5KA/4SEC,4000/1A,C1:0.5/20VA;C2:5P20/20VA;
3	-BCT2	电流互感器	CTA-G8L314-0020	1	ABB	LMZB1-10	31.5KA/4SEC,4000/1A,C1:0.5/20VA;C2:5P20/20VA;
4	-BCT3	电流互感器	CTA-G8L314-0020	1	ABB	LMZB1-10	31.5KA/4SEC,4000/1A,C1:0.5/20VA;C2:5P20/20VA;
5	-EB2	加热器	EP-HEATER-100W	1	SANYANG	1FZEK833B	100W
6	-QAB	真空断路器	VD4/P-99-R-504206785	1	ABB	VD4/P	NEW VD4 P(旋转式辅助开关) WITHOUT RL1 WITH 9NO+9NC&RL2
7	-REL1	闭锁电磁铁	EP-MAGNET	1	PEAKS	EM10-S	/

This drawing and information contained thereon is the property of ABB (XIAMEN) Switchgear CO. LTD. and shall not be used, reproduced for any purpose ,or shown to third parties without the written consent of ABB (XIAMEN) Switchgear CO. LTD.

REV.	DESCRIPTION	REV. DATE

DRAWN	XINYU LIU	TITLE	设备清单(柜体)
CHECKED	Jianjun-Wang		
APPROVED	Yongsheng.Li	CONTRACT NO.:	504485024
FIRST DATE	2025/4/28		

FUNCTION: 母联柜

PROJECT: 天津渤化永利丁辛醇项目

= B1 | SHEET NO 1
SCALE 1:1 | TOTAL PAGES 3
DRAWING NO XZS1-48353-A01-B1-E

设备清单(低压室面板)

序号	设备号	设备名称	物料号	数量	制造商	型号	设备参数
1	-BCG1	分段保护装置	CS-BHYL-03	1	北京四方	CSD-215A-G	装置电源：DC220V;电流输入：1A;电压输入：AC100V;
2	-BCM1	就地显示器	RLY-MP58	1	ABB	MP58 （LHMI）	/
3	-PFV1	强制型带电显示器	VIO-DXN-Q-A10-1	1	LEELEN	DXN-Q	DXN-Q 强制型带电显示器UGZS1 3KV/6KV/10kV，辅助电源：AC/DC 220/110V
4	-PFX1	手车位置指示	PIL-ADWZ25-B/2	1	LEELEN	ADWZ25-B/2	98-242V AC/DC,TRUCK POSITION
5	-PFX2	断路器状态指示	PIL-ADWZ25-K/2	1	LEELEN	ADWZ25-K/2	98-242V AC/DC,CB. STATUS
6	-PMM	多功能表	CS-BHYL-09	1	川泽电气	RISL-E96-5A-N-N-N-N	装置电源：DC220V ;电流输入：1A;电压输入：AC100V
7	-PW1	白色指示灯	LSA-CL2-520C	1	ABB	CL2-520C	Un=220V DC,WHITE
8	-RL10	五防锁	CS-BHYL-08	1	珠海优特电力科技股份有限公司	DNBS-2J	/
9	-SB1	黑色按钮	PBA-CP1-10B-11	1	ABB	CP1-10B-11	1NO+1NC,不带标牌套
10	-SFS31	选择开关	SSJ-E01-2-401	1	JIANGYIN CHANGJIANG	LW38D-164B0339/2PY-DAN-AX	
11	-SFS32	选择开关	SSJ-E02-4-402	1	JIANGYIN CHANGJIANG	LW38D-164N1257/4P-AX	
12	-XLP1	插拔式压板	T-JY3-2	1	UPUN	JY3-2	驼色
13	-XLP2	插拔式压板	T-JY3-2	1	UPUN	JY3-2	驼色
14	-XLP3	插拔式压板	T-JY3-2	1	UPUN	JY3-2	驼色
15	-XLP4	插拔式压板	T-JY3-2	1	UPUN	JY3-2	驼色
16	-XLP5	插拔式压板	T-JY3-2	1	UPUN	JY3-2	驼色
17	-XLP6	插拔式压板	T-JY3-2	1	UPUN	JY3-2	驼色
18	-XLP7	插拔式压板	T-JY3-2	1	UPUN	JY3-2	驼色
19	-XLP8	插拔式压板	T-JY3-2	1	UPUN	JY3-2	驼色

This drawing and information contained thereon is the property of ABB (XIAMEN) Switchgear CO. LTD. and shall not be used, reproduced for any purpose ,or shown to third parties without the written consent of ABB (XIAMEN) Switchgear CO. LTD.

REV.	DESCRIPTION	REV. DATE

DRAWN	XINYU LIU	TITLE	设备清单(低压室面板)
CHECKED	Jianjun-Wang		
APPROVED	Yongsheng.Li	CONTRACT NO.:	504485024
FIRST DATE	2025/4/28		

FUNCTION: 母联柜

PROJECT: 天津渤化永利丁辛醇项目

= B1 | SHEET NO 2
SCALE 1:1 | TOTAL PAGES 3
DRAWING NO XZS1-48353-A01-B1-E

设备清单(低压室)

序号	设备号	设备名称	物料号	数量	制造商	型号	设备参数
1	-BGD1	微动开关	EP-LVMS	1	PEAKS	TS11-001-01	MECHANICAL LIFE TIME>1000000TIMES
2	-BR20	TEMPERATURE MONITOR	RLY-MT585	1	ABB	MT585	100-240VDC/AC
3	-BR25	Humidity & Temperature Sensor	1YHT010000P0009	1	/	/	/
4	-EA1	LED低压室照明灯	L-CL10-1C-W-AA	1	PEAKS	CL10-1C-W-AA	SUPPLY: AC198~242V; POWER: <4W
5	-FCM10	微型空气开关	MCBA-202M-C1DC;MBDA-S2C-H11R	1;1	ABB	S202M-C1DC;S2C-H11R	Un=440V DC,In=1A,2-POLE
6	-FCM20	微型空气开关	MCBA-202M-C3DC;MBDA-S2C-H11R	1;1	ABB	S202M-C3DC;S2C-H11R	Un=440V DC,In=3A,2-POLE
7	-FCM30	微型空气开关	MCBA-202M-C3DC;MBDA-S2C-H11R	1;1	ABB	S202M-C3DC;S2C-H11R	Un=440V DC,In=3A,2-POLE
8	-FCM65	微型空气开关	MCBA-2030001R0014;MBDA-S2C-H11R	1;1	ABB	S203-C1;S2C-H11R	Un=400V AC,In=1A,3-POLE
9	-FCM66	微型空气开关	MCBA-2030001R0014;MBDA-S2C-H11R	1;1	ABB	S203-C1;S2C-H11R	Un=400V AC,In=1A,3-POLE
10	-FCM90	微型空气开关	MCBA-2010001R0034;MBDA-S2C-H11R	1;1	ABB	S201-C3;S2C-H11R	Un=230V AC,In=3A,1-POLE
11	-KFC1	中间继电器	RLY-CRMX220DC4	1	ABB	CRMX220DC4	CR-MX220DC4,UN=220V DC
12	-KFC4	中间继电器	RLY-CRMX220DC4	1	ABB	CRMX220DC4	CR-MX220DC4,UN=220V DC

This drawing and information contained thereon is the property of ABB (XIAMEN) Switchgear CO. LTD. and shall not be used, reproduced for any purpose ,or shown to third parties without the written consent of ABB (XIAMEN) Switchgear CO. LTD.

REV.	DESCRIPTION	REV. DATE

DRAWN	XINYU LIU	TITLE	设备清单(低压室)
CHECKED	Jianjun-Wang		
APPROVED	Yongsheng.Li	CONTRACT NO.:	504485024
FIRST DATE	2025/4/28		

FUNCTION: 母联柜

PROJECT: 天津渤化永利丁辛醇项目

= B1 | SHEET NO 3
SCALE 1:1 | TOTAL PAGES 3
DRAWING NO XZS1-48353-A01-B1-E

REV.	DESCRIPTION	REV. DATE

This drawing and information contained thereon is the property of ABB (XIAMEN) Switchgear CO. LTD. and shall not be used, reproduced for any purpose ,or shown to third parties without the written consent of ABB (XIAMEN) Switchgear CO. LTD.

==A01=B1+-X1

备注	外引电缆	设备	线号	端子号	型号	线号	设备	外引电缆	备注
		-FCM10:4		1	NEK4		-QAB:25		
				2	NEK4		-QAB:24		
		-FCM10:2		3	NEK4		-QAB:35		
				4	NEK4		-PW1:x2		
				5	NEK4		-KFC1:A2		
		-QAB:34		6	NEK4		-PW1:x1		
				7	NEK4		-KFC1:A1		

☆ 柜间小母线,随柜提供

△ 柜间控制电路(由客户自备)

短接排

分隔板

(测试短接片

O 其他

REV.	DESCRIPTION	REV. DATE

DRAWN XINYU LIU
CHECKED Jianjun-Wang
APPROVED Yongsheng.Li
FIRST DATE 2025/4/28

TITLE 端子图表 ==A01=B1+-X1

CONTRACT NO.: 504485024

FUNCTION 母联柜

PROJECT 天津渤化永利丁辛醇项目

= B1
SCALE 1:1
SHEET NO. 1
TOTAL PAGES 13
DRAWING NO. XZS1-48353-A01-B1-T

REV.	DESCRIPTION	REV. DATE

This drawing and information contained thereon is the property of ABB (XIAMEN) Switchgear CO. LTD. and shall not be used, reproduced for any purpose ,or shown to third parties without the written consent of ABB (XIAMEN) Switchgear CO. LTD.

==A01=B1+-X2

备注	外引电缆	设备	线号	端子号	型号	线号	设备	外引电缆	备注
		-FCM20:4		1	NEK4		-QAB:11		
				2	NEK4		-BR20:1		
				3	NEK4		-PMM:L+		
				4	NEK4		-BCG1:X1/c24		
				5	NEK4		-QAB:26		
				6	NEK4		-XLP5:1		
				7	NEK4				
				8	NEK4				
				9	NEK4				
	△	-邻柜继保装置故障		10	NEK4				
				11	NEK4		-SFS32:11		
				12	NEK4		-SB1:13		
				13	NEK4		-QAB:8		
				14	NEK4		-QAB:5		
				15	NEK4		-FCM90:11		
				16	NEK4		-QAB:52		
	△	=D1-X5:8		17	NEK4				
				18	NEK4				
				19	NEK4				
				20	NEK4				
				21	NEK4				
				22	NEK4				
				23	NEK4				
		-FCM20:2		24	NEK4		-PFX2:1		
				25	NEK4		-KFC4:A2		
				26	NEK4		-BR20:2		
				27	NEK4		-PMM:N-		
				28	NEK4		-BCG1:X1/c28		
				29	NEK4		-BCG1:X1/c12		
				30	NEK4		-BCG1:X3/c32		
				31	NEK4				
		-QAB:21		32	NEK4		-PFX2:3		
		-QAB:22		33	NEK4		-PFX2:2		
		-QAB:51		34	NEK4		-PFX1:3		
		-QAB:50		35	NEK4		-PFX1:2		
				36	NEK4		-KFC4:A1		
		-QAB:36		37	NEK4		-BCG1:X1/a2		
				38	NEK4		-BCG1:X1/a6		
				39	NEK4		-BCG1:X1/a8		
				40	NEK4		-BCG1:X1/a10		
				41	NEK4		-BCG1:X1/a12		
	△	-邻柜继保装置故障		42	NEK4		-BCG1:X1/c2		
		-QAB:18		43	NEK4		-BCG1:X3/a20		
		-QAB:15		44	NEK4		-BCG1:X3/a22		
		-FCM10:11		45	RCT4SW		-FCM90:11		
		-FCM66:12		46	NEK4		-BCG1:X3/a24		
		-QAB:54		47	NEK4		-BCG1:X3/a26		
		-QAB:53		48	NEK4		-BCG1:X3/a28		
	△	=D1-X5:7		49	NEK4		-BCG1:X3/a30		
	△	=D1-X5:9		50	NEK4		-BCG1:X3/a32		
				51	NEK4		-BCG1:X3/c20		
				52	NEK4		-BCG1:X3/c22		
				53	NEK4		-BCG1:X3/c24		
				54	NEK4		-BCG1:X3/c26		

☆ 柜间小母线,随柜提供

△ 柜间控制电路(由客户自备)

短接排

✕ 分隔板

(测试短接片

O 其他

DRAWN	XINYU LIU
CHECKED	Jianjun-Wang
APPROVED	Yongsheng.Li
FIRST DATE	2025/4/28
REV. DATE	
DESCRIPTION	
REV.	

TITLE: 端子图表 ==A01=B1+-X2

CONTRACT NO.: 504485024

FUNCTION: 母联柜

PROJECT: 天津渤化永利丁辛醇项目

=	B1
SCALE	1:1
SHEET NO.	2
TOTAL PAGES	13
DRAWING NO.	XZS1-48353-A01-B1-T

==A01=B1+-X2

备注	外引电缆	设备	线号	型号	端子号	线号	设备	外引电缆	备注
		-BCG1:X3/c28		NEK4	1 55				
		-BCG1:X3/c30		NEK4	1 56				
		-XLP8:1		NEK4	1 57				
		-XLP8:2		NEK4	1 58				

☆ 柜间小母线,厢柜提供
△ 柜间控制电路(由客户自备)
短接排
分隔板
测试短接片
其他

This drawing and information contained thereon is the property of ABB (XIAMEN) Switchgear CO. LTD. and shall not be used, reproduced for any purpose ,or shown to third parties without the written consent of ABB (XIAMEN) Switchgear CO.LTD.

REV.	DESCRIPTION	REV. DATE

DRAWN	XINYU LIU	TITLE	端子图表 ==A01=B1+-X2
CHECKED	Jianjun-Wang		
APPROVED	Yongsheng.Li	CONTRACT NO.:	504485024
FIRST DATE	2025/4/28		

FUNCTION: 母联柜

PROJECT: 天津渤化永利丁辛醇项目

= B1 | SHEET NO 2.a
SCALE 1:1 | TOTAL PAGES 13
DRAWING NO XZS1-48353-A01-B1-T

REV.	DESCRIPTION	REV. DATE

This drawing and information contained thereon is the property of ABB (XIAMEN) Switchgear CO. LTD. and shall not be used, reproduced for any purpose ,or shown to third parties without the written consent of ABB (XIAMEN) Switchgear CO. LTD.

==A01=B1+-X3

备注	外引电缆	设备	线号	端子号	型号	线号	设备	外引电缆	备注
				1	NEK4		-FCM30:4		
				2	NEK4				
	△	=D1-X5:27		3	NEK4				
				4	NEK4		-RL10:+		
				5	NEK4		-SFS32:3		
	△	=D1-X5:29		6	NEK4				
				7	NEK4				
				8	NEK4		-BCG1:X2/c2		
				9	NEK4				
	△	=P1-X5:15		10	NEK4				
				11	NEK4		-BCG1:X2/c10		
				12	NEK4		-PFV1:220V		
				13	NEK4				
		-FCM30:2		14	NEK4		-QAB:14		
				15	NEK4		-QAB:30		
				16	NEK4		-QAB:46		
				17	NEK4		-BCG1:X2/c22		
				18	NEK4		-PFV1:0V		
				19	NEK4		-REL1:E2		
				20	NEK4				
				21	NEK4		-QAB:49		
				22	NEK4		=I1-X5:28	△	
				23	NEK4		=I1-X5:28	△	
				24	NEK4		-XLP1:1		
				25	NEK4		-X3:37		
				26	NEK4				
				27	NEK4		-XLP1:2		
				28	NEK4		=I1-X5:29	△	
	△	=D1-X5:5		29	NEK4		=I1-X5:29	△	
	△	=D1-X5:6		30	NEK4				
				31	NEK4		-QAB:10		
		-QAB:32		32	NEK4		-QAB:4		
				33	NEK4		-XLP4:2		
	△	=D1-X5:28		34	NEK4				
		-BCG1:X2/c18		35	NEK4		-SFS31:4		
				36	NEK4		-BCG1:X2/a6		
		-X3:25		37	NEK4		-BCG1:X2/a18		
		-QAB:42		38	NEK4		-BCG1:X2/a16		
				39	NEK4		-BCG1:X2/a20		
				40	NEK4		-BCG1:X2/a4		
		-SFS31:2		41	NEK4		-BCG1:X2/c16		
				42	NEK4				
	△	=D1-X5:30		43	NEK4		-BCG1:X2/c14		
				44	NEK4				
				45	NEK4				
				46	NEK4		-BCG1:X2/c20		
		-BCG1:X2/c12		47	NEK4		-XLP3:2		
				48	NEK4				
				49	NEK4				
		-QAB:31		50	NEK4		-BCG1:X2/a14		
				51	NEK4		-BCG1:X2/a12		
				52	NEK4		-QAB:41		
	△	=P1-X5:16		53	NEK4		=P1-X5:15	△	
	△	=P1-X5:16		54	NEK4				

☆ 柜间小母线,随柜提供

△ 柜间控制电路(由客户自备)

短接排

✕ 分隔板

(测试短接片

O 其他

DRAWN	XINYU LIU
CHECKED	Jianjun-Wang
APPROVED	Yongsheng.Li
FIRST DATE	2025/4/28
REV. DATE	
REV.	
DESCRIPTION	

TITLE: 端子图表 ==A01=B1+-X3

CONTRACT NO.: 504485024

FUNCTION: 母联柜

PROJECT: 天津渤化永利丁辛醇项目

=	B1
SCALE	1:1
SHEET NO.	3
TOTAL PAGES	13
DRAWING NO.	XZS1-48353-A01-B1-T

==A01=B1+-X3

备注	外引电缆	设备	线号	型号	端子号	线号	设备	外引电缆	备注
		-QAB45		NEK4	● 55				
		-REL1:E1		NEK4	× 56		-PFV1:COM		

☆ 柜间小母线,厢柜提供
△ 柜间控制电路(由客户自备)
●— 短接排
× 分隔板
(测试短接片
o 其他

This drawing and information contained thereon is the property of ABB (XIAMEN) Switchgear CO. LTD. and shall not be used, reproduced for any purpose ,or shown to third parties without the written consent of ABB (XIAMEN) Switchgear CO. LTD.

REV.	DESCRIPTION	REV. DATE

DRAWN	XINYU LIU	TITLE	端子图表 ==A01=B1+-X3
CHECKED	Jianjun-Wang		
APPROVED	Yongsheng.Li	CONTRACT NO.:	504485024
FIRST DATE	2025/4/28		

ABB

FUNCTION	母联柜
PROJECT	天津渤化永利丁辛醇项目

=	B1	SHEET NO	3.a
SCALE	1:1	TOTAL PAGES	13
DRAWING NO	XZS1-48353-A01-B1-T		

REV.	DESCRIPTION	REV. DATE

This drawing and information contained thereon is the property of ABB (XIAMEN) Switchgear CO. LTD. and shall not be used, reproduced for any purpose ,or shown to third parties without the written consent of ABB (XIAMEN) Switchgear CO. LTD.

==A01=B1+-X4

备注	外引电缆	设备	线号	端子号	型号	线号	设备	外引电缆	备注
		-BCT1:1S1		1	NEK6S		-PMM:IA		
		-BCT1:1S2		2	NEK6S		-BCG1:X6/b5		
		-BCT2:1S1		3	NEK6S		-PMM:IB		
		-BCT2:1S2		4	NEK6S		-BCG1:X6/b6		
		-BCT3:1S1		5	NEK6S		-PMM:IC		
		-BCT3:1S2		6	NEK6S		-BCG1:X6/b7		
		-GND		7	NEK6S				
		-BCT1:2S1		8	NEK6S		-BCG1:X6/a1		
		-BCT1:2S2		9	NEK6S		-BCG1:X6/b1		
		-BCT2:2S1		10	NEK6S		-BCG1:X6/a2		
		-BCT2:2S2		11	NEK6S		-BCG1:X6/b2		
		-BCT3:2S1		12	NEK6S		-BCG1:X6/a3		
		-BCT3:2S2		13	NEK6S		-BCG1:X6/b3		
		-GND		14	NEK6S				
				15	NEK6S				
				16	NEK6S				
				17	NEK6S				

☆ 柜间小母线,随柜提供

△ 柜间控制电路(由客户自备)

短接排

✕ 分隔板

(测试短接片

O 其他

REV.	DRAWN	XINYU LIU
DESCRIPTION	CHECKED	Jianjun-Wang
REV. DATE	APPROVED	Yongsheng.Li
	FIRST DATE	2025/4/28

TITLE: 端子图表 ==A01=B1+-X4

CONTRACT NO.: 504485024

FUNCTION: 母联柜

PROJECT: 天津渤化永利丁辛醇项目

=	B1	SHEET NO. 4
SCALE	1:1	TOTAL PAGES 13
DRAWING NO.	XZS1-48353-A01-B1-T	

REV.	DESCRIPTION	REV. DATE

This drawing and information contained thereon is the property of ABB (XIAMEN) Switchgear CO. LTD. and shall not be used, reproduced for any purpose ,or shown to third parties without the written consent of ABB (XIAMEN) Switchgear CO. LTD.

==A01=B1+-X5

备注	外引电缆	设备	线号	端子号	型号	线号	设备	外引电缆	备注
				1	NEK4		-KFC1:14		
				2	NEK4		-KFC1:11		
				3	NEK4		-QAB:9		
				4	NEK4		-QAB:19		
				5	NEK4		-QAB:28		
				6	NEK4		-QAB:38		
				7	NEK4		-QAB:29		
				8	NEK4		-QAB:39		
	△	-1#综合选线装置		9	NEK4		-QAB:59		
	△	-1#综合选线装置		10	NEK4		-QAB:60		
	△	-2#综合选线装置		11	NEK4		-QAB:43		
	△	-2#综合选线装置		12	NEK4		-QAB:44		
				13	NEK4		-QAB:2		
				14	NEK4		-QAB:3		
				15	NEK4		-QAB:13		
	△	=I1-X3:17		16	NEK4		-QAB:6		
	△	=I1-X3:22		17	NEK4		-QAB:16		
	△	=I1-X3:17		18	NEK4		-QAB:7		
	△	=I1-X3:22		19	NEK4		-QAB:17		
	△	=D1-X2:10		20	NEK4		-QAB:63		
	△	=D1-X2:35		21	NEK4		-QAB:64		
				22	NEK4		-QAB:23		
				23	NEK4		-QAB:33		
				24	NEK4		-QAB:27		
				25	NEK4		-QAB:37		
				26	NEK4		-QAB:62		
				27	NEK4		-QAB:55		
				28	NEK4		-QAB:56		
				29	NEK4		-QAB:48		
	△	=P1-X2:15		30	NEK4		-QAB:12		
	△	=P1-X2:16		31	NEK4		-QAB:47		
	△	=P1-X2:15		32	NEK4		-QAB:57		
	△	=P1-X2:16		33	NEK4		-QAB:58		
	△	=D1-X3:1		34	NEK4		-KFC4:14		
	△	=D1-X3:8		35	NEK4		-KFC4:11		
				36	NEK4		-SFS32:5		
				37	NEK4		-SFS32:6		
				38	NEK4		-SFS32:7		
				39	NEK4		-SFS32:8		
				40	NEK4		-FCM20:11		
				41	NEK4		-FCM20:12		
				42	NEK4		-BCG1:X2/c28		
				43	NEK4		-BCG1:X2/c32		
				44	NEK4		-BCG1:X2/c30		
				45	NEK4		-BCG1:X1/a22		
				46	NEK4		-BCG1:X1/a20		
				47	NEK4		-BCG1:X1/a18		
	△	-至邻柜继保BI		48	NEK4		-BCG1:X1/a14		
	△	-至邻柜继保BI		49	NEK4		-BCG1:X1/a16		
				50	NEK4		-BR20:4		
				51	NEK4		-BR25:V+		
				52	NEK4		-BR20:5		
				53	NEK4		-BR25:V-		
				54	NEK4				

☆ 柜间小母线,随柜提供

△ 柜间控制电路(由客户自备)

短接排

✕ 分隔板

(测试短接片

O 其他

DRAWN	XINYU LIU	TITLE
CHECKED	Jianjun-Wang	
APPROVED	Yongsheng.Li	CONTRACT NO.:
FIRST DATE	2025/4/28	504485024
REV. DATE		
DESCRIPTION		
REV.		

端子图表 ==A01=B1+-X5

FUNCTION 母联柜

PROJECT 天津渤化永利丁辛醇项目

=	B1	SHEET NO. 5
SCALE	1:1	TOTAL PAGES 13
DRAWING NO.	XZS1-48353-A01-B1-T	

==A01=B1+-X5

备注	外引电缆	设备	线号	型号	端子号	线号	设备	外引电缆	备注
				NEK4	ı 55				
				NEK4	ı 56				
				NEK4	ı 57				
				NEK4	ı 58				
				NEK4	ı 59				
				NEK4	ı 60				
				NEK4	ı 61				
				NEK4	ı 62				
				NEK4	ı 63				
		-KFC4:44		NEK4	ı 64				
		-KFC4:41		NEK4	ı 65				

☆ 柜间小母线,厢柜提供

△ 柜间控制电路(由客户自备)

短接排

分隔板

测试短接片

其他

This drawing and information contained thereon is the property of ABB (XIAMEN) Switchgear CO. LTD. and shall not be used, reproduced for any purpose ,or shown to third parties without the written consent of ABB (XIAMEN) Switchgear CO. LTD.

REV.	DESCRIPTION	REV. DATE

DRAWN	XINYU LIU	TITLE	端子图表 ==A01=B1+-X5
CHECKED	Jianjun-Wang		
APPROVED	Yongsheng.Li	CONTRACT NO.:	504485024
FIRST DATE	2025/4/28		

FUNCTION: 母联柜

PROJECT: 天津渤化永利丁辛醇项目

= B1 | SHEET NO 5.a

SCALE 1:1 | TOTAL PAGES 13

DRAWING NO XZS1-48353-A01-B1-T

REV.	DESCRIPTION	REV. DATE

This drawing and information contained thereon is the property of ABB (XIAMEN) Switchgear CO. LTD. and shall not be used, reproduced for any purpose ,or shown to third parties without the written consent of ABB (XIAMEN) Switchgear CO. LTD.

==A01=B1+-X6

备注	外引电缆	设备	线号	端子号	型号	线号	设备	外引电缆	备注
		-FCM65:2		1	NEK4		-BCG1:X6/a8		
		-FCM65:4		2	NEK4		-BCG1:X6/a9		
		-FCM65:6		3	NEK4		-BCG1:X6/a10		
		-X13:4		4	NEK4		-BCG1:X6/b8		
		-FCM66:2		5	NEK4		-PMM:UA		
		-FCM66:4		6	NEK4		-PMM:UB		
		-FCM66:6		7	NEK4		-PMM:UC		
		-X13:10		8	NEK4		-PMM:UN		

☆ 柜间小母线,随柜提供

△ 柜间控制电路(由客户自备)

短接排

分隔板

(测试短接片

O 其他

REV.	DESCRIPTION	REV. DATE		
		DRAWN	XINYU LIU	TITLE
		CHECKED	Jianjun-Wang	端子图表 ==A01=B1+-X6
		APPROVED	Yongsheng.Li	CONTRACT NO.:
		FIRST DATE	2025/4/28	504485024

FUNCTION: 母联柜

PROJECT: 天津渤化永利丁辛醇项目

=	B1	SHEET NO.	6
SCALE	1:1	TOTAL PAGES	13
DRAWING NO.	XZS1-48353-A01-B1-T		

REV.	DESCRIPTION	REV. DATE

This drawing and information contained thereon is the property of ABB (XIAMEN) Switchgear CO. LTD. and shall not be used, reproduced for any purpose ,or shown to third parties without the written consent of ABB (XIAMEN) Switchgear CO. LTD.

==A01=B1+-X9

备注	外引电缆	设备	线号	端子号	型号	线号	设备	外引电缆	备注
				1	NEK4		-EB2:1		
		-FCM90:2		2	NEK4		-BGD1:1		
				3	NEK4		-EB2:2		
		-X11:4		4	NEK4		-EA1:A2		
		-EA1:A1		5	RCT4SW		-BGD1:2		

☆ 柜间小母线,随柜提供

△ 柜间控制电路(由客户自备)

短接排

分隔板

(测试短接片

O 其他

DRAWN	XINYU LIU
CHECKED	Jianjun-Wang
APPROVED	Yongsheng.Li
FIRST DATE	2025/4/28
REV. DATE	
REV.	
DESCRIPTION	

TITLE: 端子图表 ==A01=B1+-X9

CONTRACT NO.: 504485024

FUNCTION: 母联柜

PROJECT: 天津渤化永利丁辛醇项目

=	B1
SCALE	1:1
DRAWING NO	XZS1-48353-A01-B1-T
SHEET NO	7
TOTAL PAGES	13

REV.	DESCRIPTION	REV. DATE

This drawing and information contained thereon is the property of ABB (XIAMEN) Switchgear CO. LTD. and shall not be used, reproduced for any purpose ,or shown to third parties without the written consent of ABB (XIAMEN) Switchgear CO. LTD.

==A01=B1+-X11

备注	外引电缆	设备	线号	端子号	型号	线号	设备	外引电缆	备注
6黑色	☆	-X11.2:1		1	A3C 6		-FCM90:1		
6黑色	☆	-X11.1:1							
6黑色	☆	-X11.2:2		2	A3C 6				
6黑色	☆	-X11.1:2							
6黑色	☆	-X11.2:3		3	A3C 6				
6黑色	☆	-X11.1:3							
6黑色	☆	-X11.2:4		4	A3C 6		-X9:4		
6黑色	☆	-X11.1:4							
6黑色	☆	-X11.2:5		5	A3C 6		-FCM10:3		
6黑色	☆	-X11.1:5							
6黑色	☆	-X11.2:6		6	A3C 6		-FCM10:1		
6黑色	☆	-X11.1:6							
6黑色	☆	-X11.2:7		7	A3C 6		-FCM30:3		
6黑色	☆	-X11.1:7							
6黑色	☆	-X11.2:8		8	A3C 6		-FCM30:1		
6黑色	☆	-X11.1:8							

☆ 柜间小母线,随柜提供

△ 柜间控制电路(由客户自备)

短接排

✕ 分隔板

(测试短接片

O 其他

REV.	DESCRIPTION	REV. DATE

DRAWN	XINYU LIU	TITLE
CHECKED	Jianjun-Wang	端子图表 ==A01=B1+-X11
APPROVED	Yongsheng.Li	CONTRACT NO.:
FIRST DATE	2025/4/28	504485024

FUNCTION 母联柜

PROJECT 天津渤化永利丁辛醇项目

=	B1	SHEET NO. 8
SCALE	1:1	TOTAL PAGES 13

DRAWING NO. XZS1-48353-A01-B1-T

REV.	DESCRIPTION	REV. DATE

This drawing and information contained thereon is the property of ABB (XIAMEN) Switchgear CO. LTD. and shall not be used, reproduced for any purpose ,or shown to third parties without the written consent of ABB (XIAMEN) Switchgear CO. LTD.

==A01=B1+-X13

备注	外引电缆	设备	线号	端子号	型号	线号	设备	外引电缆	备注
	☆	-X13.1:1		1	A4C 4		-FCM65:1		
	☆	-X13.2:1							
	☆	-X13.1:2		2	A4C 4		-FCM65:3		
	☆	-X13.2:2							
	☆	-X13.1:3		3	A4C 4		-FCM65:5		
	☆	-X13.2:3							
	☆	-X13.1:4		4	A4C 4		-X6:4		
	☆	-X13.2:4							
	☆	-X13.1:5		5	A4C 4				
	☆	-X13.2:5							
	☆	-X13.1:6		6	A4C 4				
	☆	-X13.2:6							
	☆	-X13.3:7		7	A4C 4		-FCM66:1		
	☆	-X13.4:7							
	☆	-X13.3:8		8	A4C 4		-FCM66:3		
	☆	-X13.4:8							
	☆	-X13.3:9		9	A4C 4		-FCM66:5		
	☆	-X13.4:9							
	☆	-X13.3:10		10	A4C 4		-X6:8		
	☆	-X13.4:10							

☆ 柜间小母线,随柜提供

△ 柜间控制电路(由客户自备)

短接排

分隔板

(测试短接片

O 其他

DRAWN	XINYU LIU	TITLE
CHECKED	Jianjun-Wang	端子图表 ==A01=B1+-X13
APPROVED	Yongsheng.Li	CONTRACT NO.:
FIRST DATE	2025/4/28	504485024
REV. DATE		
DESCRIPTION		
REV.		

FUNCTION 母联柜

PROJECT 天津渤化永利丁辛醇项目

=	B1	SHEET NO. 9
SCALE	1:1	TOTAL PAGES 13
DRAWING NO. XZS1-48353-A01-B1-T		

REV.	DESCRIPTION	REV. DATE

This drawing and information contained thereon is the property of ABB (XIAMEN) Switchgear CO. LTD. and shall not be used, reproduced for any purpose ,or shown to third parties without the written consent of ABB (XIAMEN) Switchgear CO. LTD.

==A01=B1+-X14

备注	外引电缆	设备	线号	端子号	型号	线号	设备	外引电缆	备注
	☆	-X14:2		1	NEK4		-BR20:10		
				2	NEK4				
	☆	-X14:4		3	NEK4		-BR20:9		
				4	NEK4				
	☆	-X14:6		5	NEK4		-ST1		
				6	NEK4		-GND		
	☆	-X14:8		7	NEK4				
				8	NEK4				
	☆	-X14:10		9	NEK4				
				10	NEK4				
	☆	-X14:12		11	NEK4				
				12	NEK4		-GND		
				13	NEK4		-BCG1:X4/1		
				14	NEK4		-BCG1:X4/2		
				15	NEK4		-BCG1:X4/3		
				16	NEK4		-PMM:A		
				17	NEK4		-PMM:B		
				18	NEK4		-PMM:S		
				19	NEK4		-BR20:7		
				20	NEK4		-BR25:A		
				21	NEK4		-BR20:6		屏蔽双绞线
				22	NEK4		-BR25:B		

☆ 柜间小母线,随柜提供

△ 柜间控制电路(由客户自备)

短接排

分隔板

(测试短接片

O 其他

DRAWN	XINYU LIU
CHECKED	Jianjun-Wang
APPROVED	Yongsheng.Li
FIRST DATE	2025/4/28
REV. DATE	
REV.	
DESCRIPTION	

TITLE: 端子图表 ==A01=B1+-X14

CONTRACT NO.: 504485024

FUNCTION: 母联柜

PROJECT: 天津渤化永利丁辛醇项目

=	B1
SCALE	1:1
SHEET NO.	10
TOTAL PAGES	13

DRAWING NO. XZS1-48353-A01-B1-T

单线图

一次设备索引			
设备号	设备名称	数量	物料号
-QBD	隔离手车	1	QS-Y0
-BAD	电容分压装置	3	DIK-06-B06N1000C

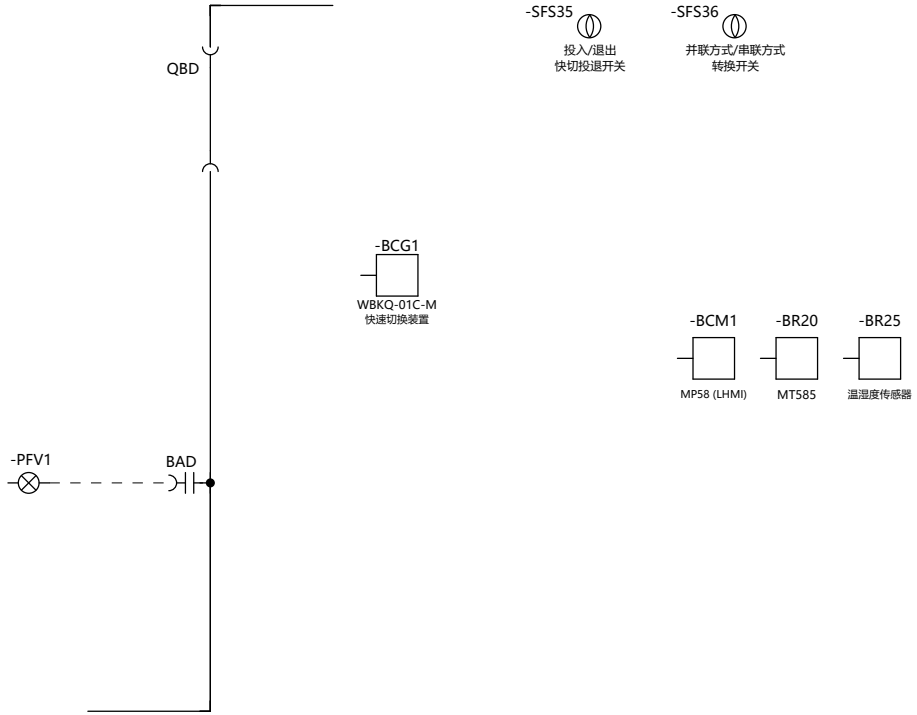

This drawing and information contained thereon is the property of ABB (XIAMEN) Switchgear CO. LTD. and shall not be used, reproduced for any purpose ,or shown to third parties without the written consent of ABB (XIAMEN) Switchgear CO. LTD.

REV.	DESCRIPTION	REV. DATE

DRAWN	XINYU LIU	TITLE	单线图
CHECKED	Jianjun-Wang		
APPROVED	Yongsheng.Li	CONTRACT NO.:	504485024
FIRST DATE	2025/4/28		

FUNCTION: 母联隔离柜

PROJECT: 天津渤化永利丁辛醇项目

= D1 | SHEET NO 1
SCALE 1:1 | TOTAL PAGES 13
DRAWING NO XZS1-48353-A01-D1-S

闭锁回路	保护与信号回路	加热器回路 电缆室 100W	低压室照明

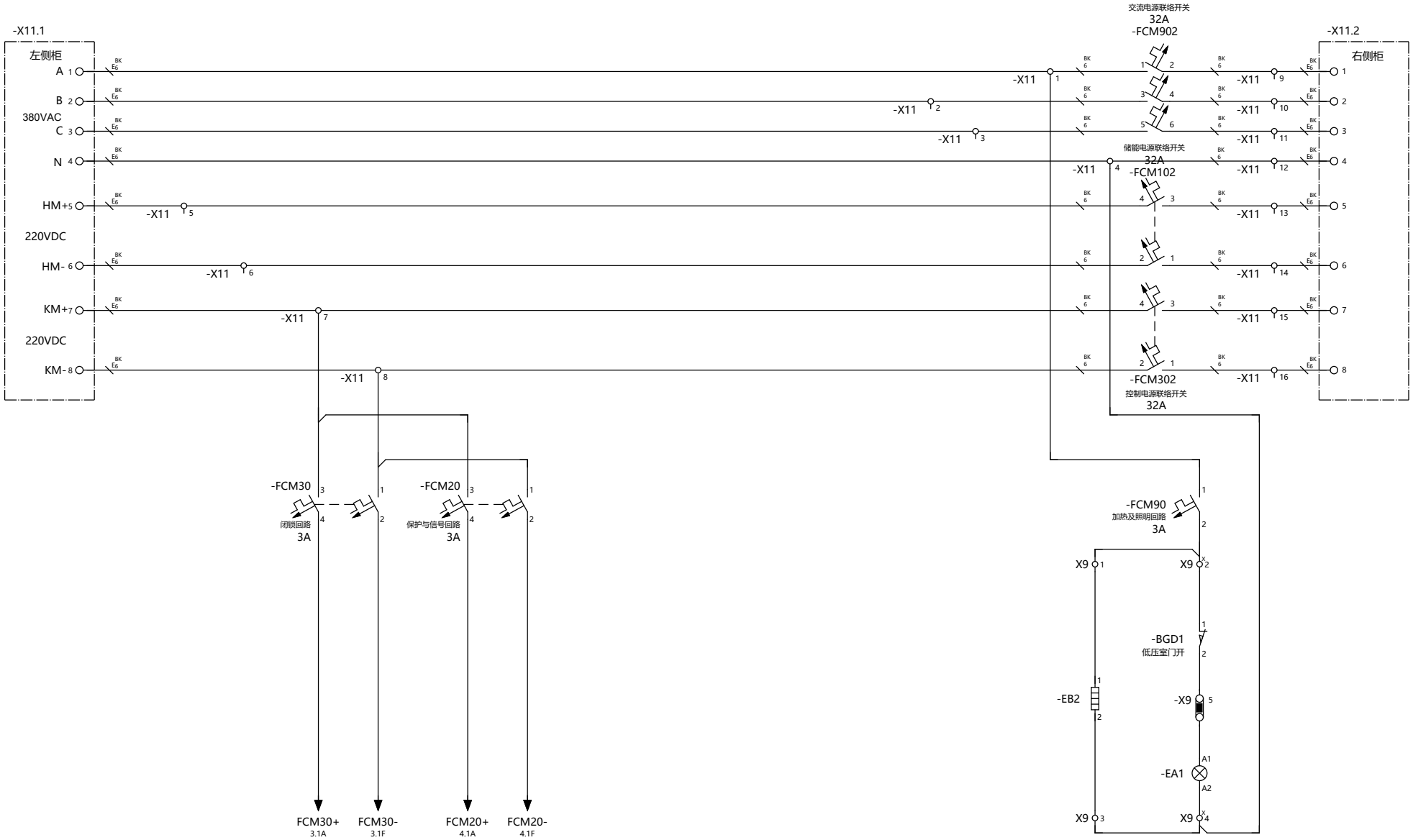

This drawing and information contained thereon is the property of ABB (XIAMEN) Switchgear CO. LTD. and shall not be used, reproduced for any purpose ,or shown to third parties without the written consent of ABB (XIAMEN) Switchgear CO. LTD.

REV.	DESCRIPTION	REV. DATE

DRAWN	XINYU LIU	TITLE	电源小母线回路
CHECKED	Jianjun-Wang		
APPROVED	Yongsheng.Li	CONTRACT NO.:	504485024
FIRST DATE	2025/4/28		

ABB

FUNCTION	母联隔离柜
PROJECT	天津渤化永利丁辛醇项目

=	D1	SHEET NO	2
SCALE	1:1	TOTAL PAGES	13
DRAWING NO	XZS1-48353-A01-D1-S		

隔离小车闭锁回路 | 带电显示及其闭锁回路

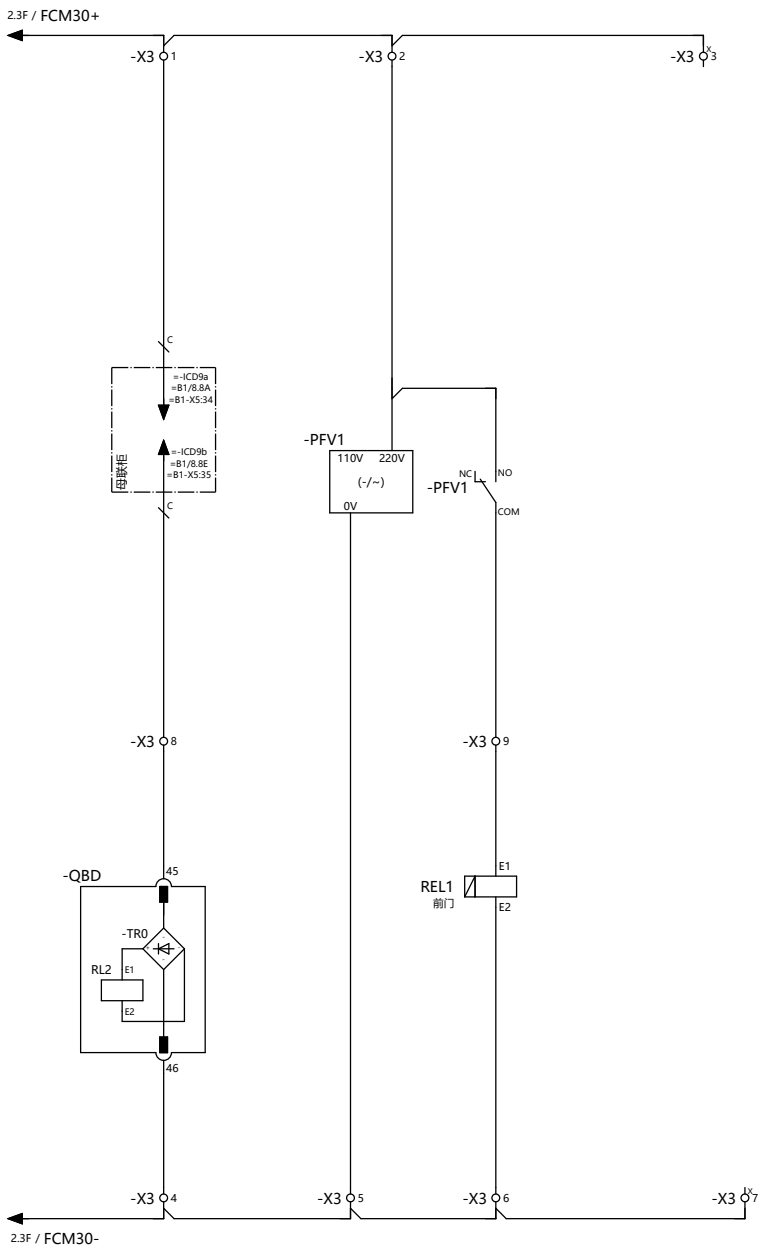

This drawing and information contained thereon is the property of ABB (XIAMEN) Switchgear CO. LTD. and shall not be used, reproduced for any purpose ,or shown to third parties without the written consent of ABB (XIAMEN) Switchgear CO. LTD.

REV.	DESCRIPTION	REV. DATE

DRAWN	XINYU LIU	TITLE	闭锁回路
CHECKED	Jianjun-Wang		
APPROVED	Yongsheng.Li	CONTRACT NO.:	504485024
FIRST DATE	2025/4/28		

FUNCTION: 母联隔离柜

PROJECT: 天津渤化永利丁辛醇项目

= D1 | SHEET NO 3

SCALE 1:1 | TOTAL PAGES 13

DRAWING NO XZS1-48353-A01-D1-S

隔离手车位置		MT585电源	快切装置辅助电源
工作	试验		

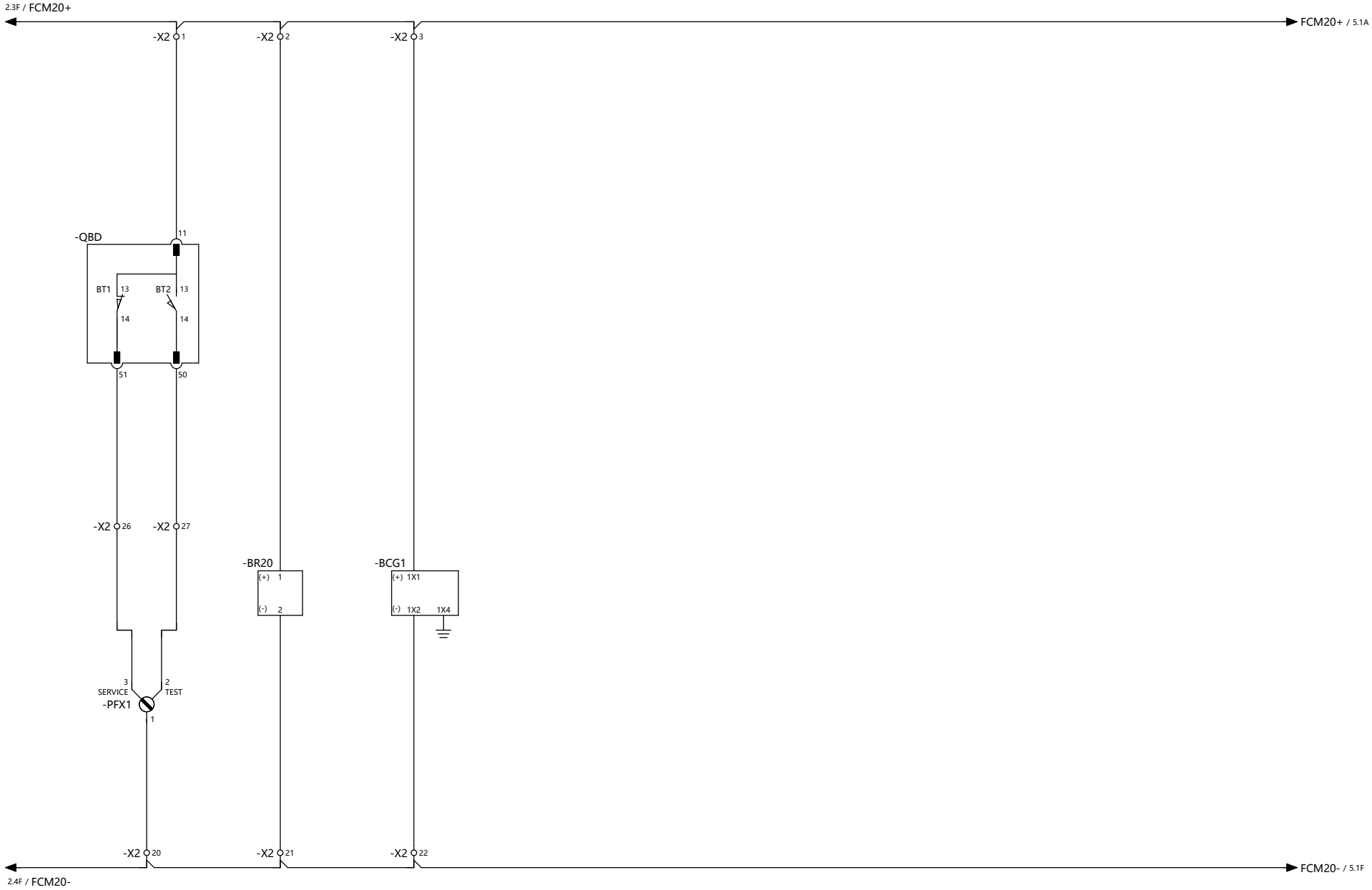

This drawing and information contained thereon is the property of ABB (XIAMEN) Switchgear CO. LTD. and shall not be used, reproduced for any purpose ,or shown to third parties without the written consent of ABB (XIAMEN) Switchgear CO. LTD.

REV.	DESCRIPTION	REV. DATE

DRAWN	XINYU LIU	TITLE	保护与信号回路
CHECKED	Jianjun-Wang		
APPROVED	Yongsheng.Li	CONTRACT NO.:	504485024
FIRST DATE	2025/4/28		

FUNCTION: 母联隔离柜

PROJECT: 天津渤化永利丁辛醇项目

=	D1	SHEET NO	4
SCALE	1:1	TOTAL PAGES	13

DRAWING NO. XZS1-48353-A01-D1-S

1#进线柜分闸	2#进线柜分闸	1#母线PT工作位（开入动作为PT投入）	控制台闭锁	保护闭锁	DCS合1#进线	母联柜分闸	2#母线PT工作位（开入动作为PT投入）	1#进线手动启动（手动倒闸,由2#进线带全段）	1#进线保护启动	手动切换方式（开入不动作作为手动并联）	装置复归	2#进线手动启动（手动倒闸,由1#进线带全段）

串联：先跳进线后合母联
并联：先合母联后跳进线

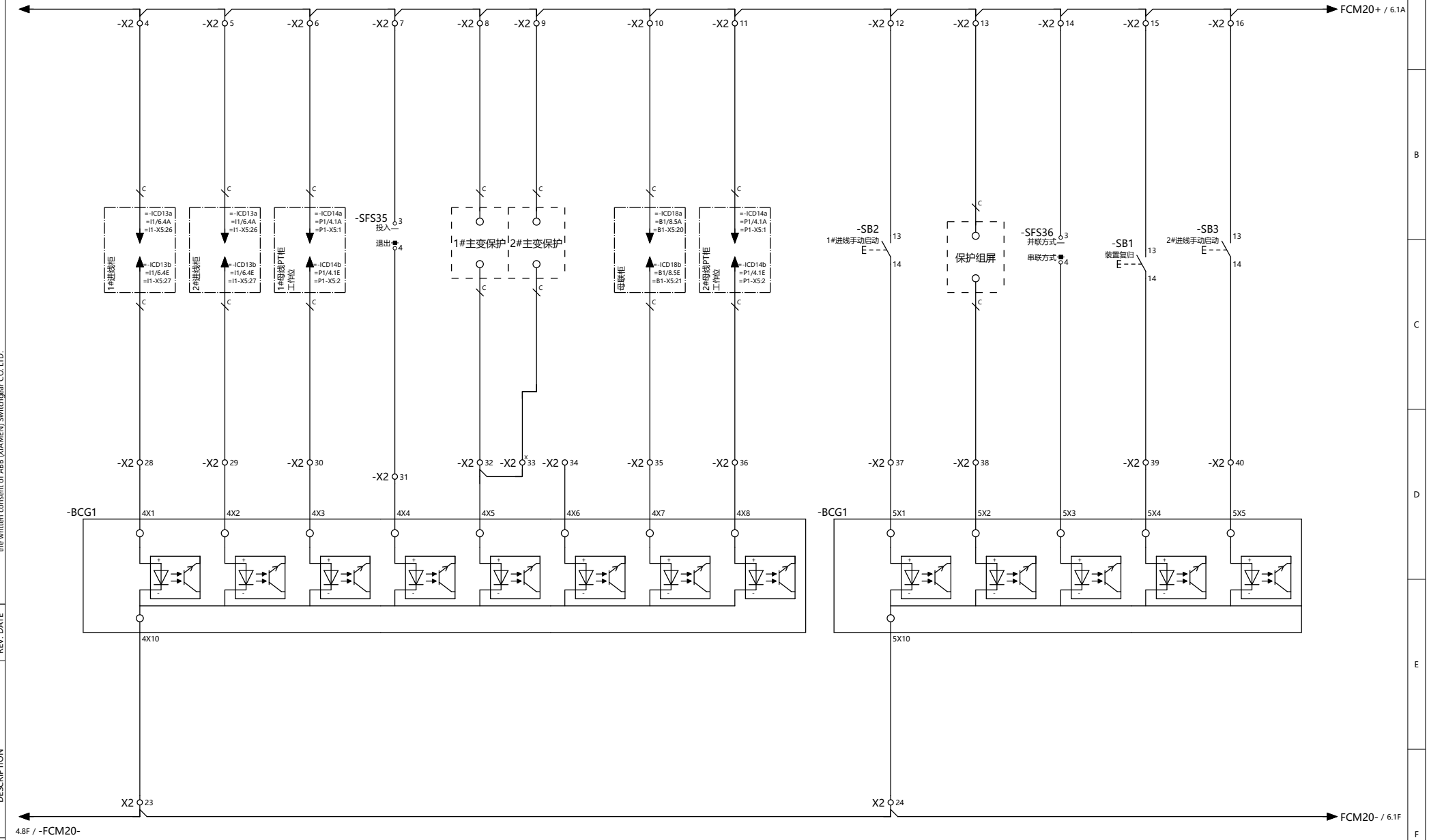

This drawing and information contained thereon is the property of ABB (XIAMEN) Switchgear CO. LTD. and shall not be used, reproduced for any purpose ,or shown to third parties without the written consent of ABB (XIAMEN) Switchgear CO. LTD.

REV.	DESCRIPTION	REV. DATE

DRAWN	XINYU LIU	TITLE	保护与信号回路
CHECKED	Jianjun-Wang		
APPROVED	Yongsheng.Li	CONTRACT NO.:	504485024
FIRST DATE	2025/4/28		

ABB

FUNCTION	母联隔离柜
PROJECT	天津渤化永利丁辛醇项目

=	D1	SHEET NO	5
SCALE	1:1	TOTAL PAGES	13
DRAWING NO	XZS1-48353-A01-D1-S		

DCS合2#进线	2#进线保护启动	备用

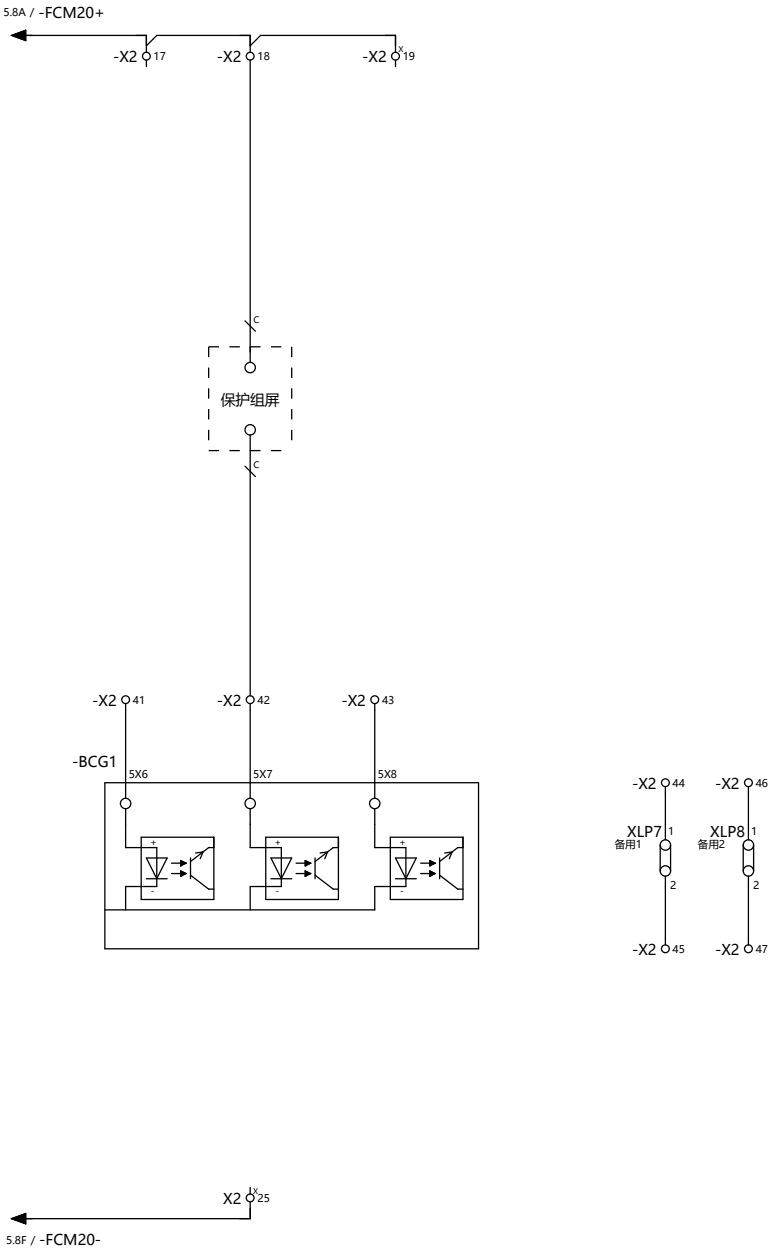

This drawing and information contained thereon is the property of ABB (XIAMEN) Switchgear CO. LTD. and shall not be used, reproduced for any purpose ,or shown to third parties without the written consent of ABB (XIAMEN) Switchgear CO. LTD.

REV.	DESCRIPTION	REV. DATE

DRAWN	XINYU LIU	TITLE	保护与信号回路
CHECKED	Jianjun-Wang		
APPROVED	Yongsheng.Li	CONTRACT NO.:	504485024
FIRST DATE	2025/4/28		

FUNCTION: 母联隔离柜

PROJECT: 天津渤化永利丁辛醇项目

= D1 | SHEET NO 6

SCALE 1:1 | TOTAL PAGES 13

DRAWING NO XZS1-48353-A01-D1-S

隔离手车位置		空开信号
工作	试验	

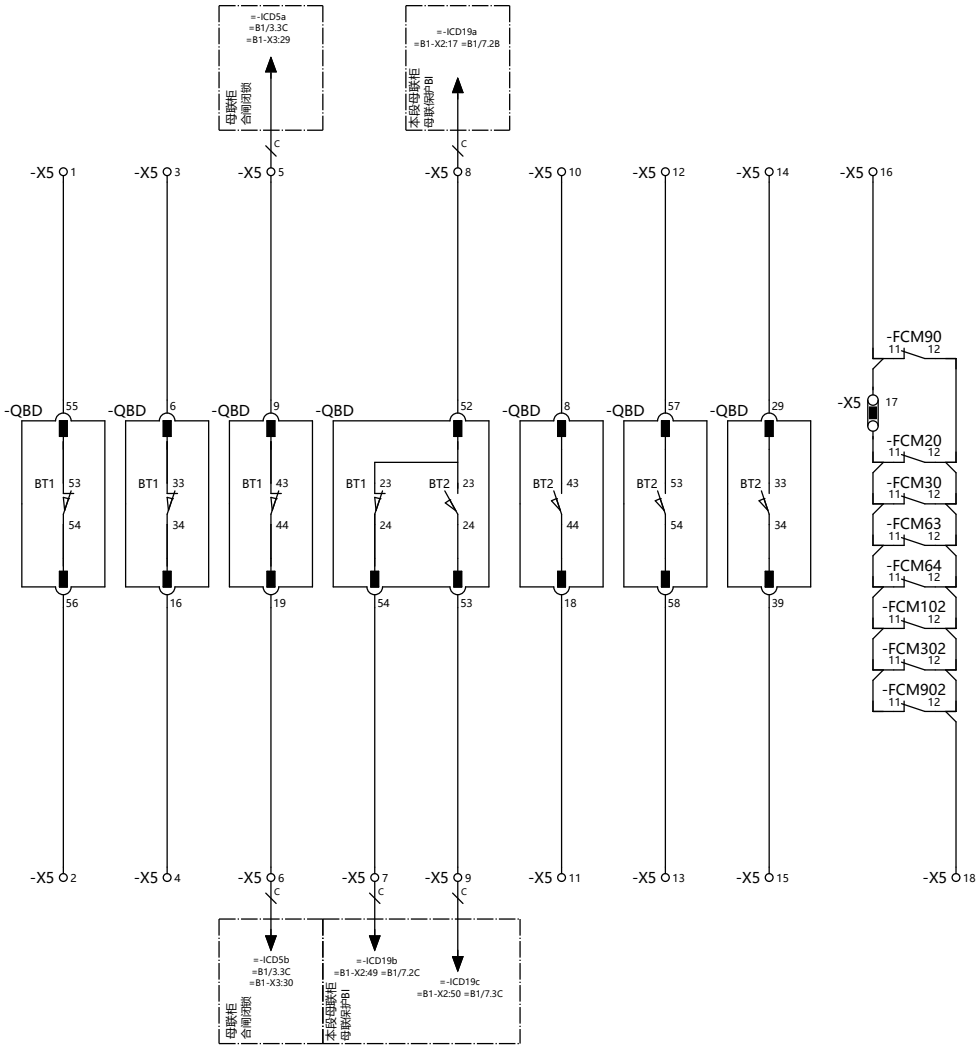

-X5 53 -X5 54 -X5 55 -X5 56 -X5 57

-X5 58 -X5 59 -X5 60 -X5 61 -X5 62

This drawing and information contained thereon is the property of ABB (XIAMEN) Switchgear CO. LTD. and shall not be used, reproduced for any purpose ,or shown to third parties without the written consent of ABB (XIAMEN) Switchgear CO. LTD.

REV.	DESCRIPTION	REV. DATE

DRAWN	XINYU LIU	TITLE	备用回路
CHECKED	Jianjun-Wang		
APPROVED	Yongsheng.Li	CONTRACT NO.:	504485024
FIRST DATE	2025/4/28		

FUNCTION: 母联隔离柜

PROJECT: 天津渤化永利丁辛醇项目

= D1 | SHEET NO 7
SCALE 1:1 | TOTAL PAGES 13
DRAWING NO XZS1-48353-A01-D1-S

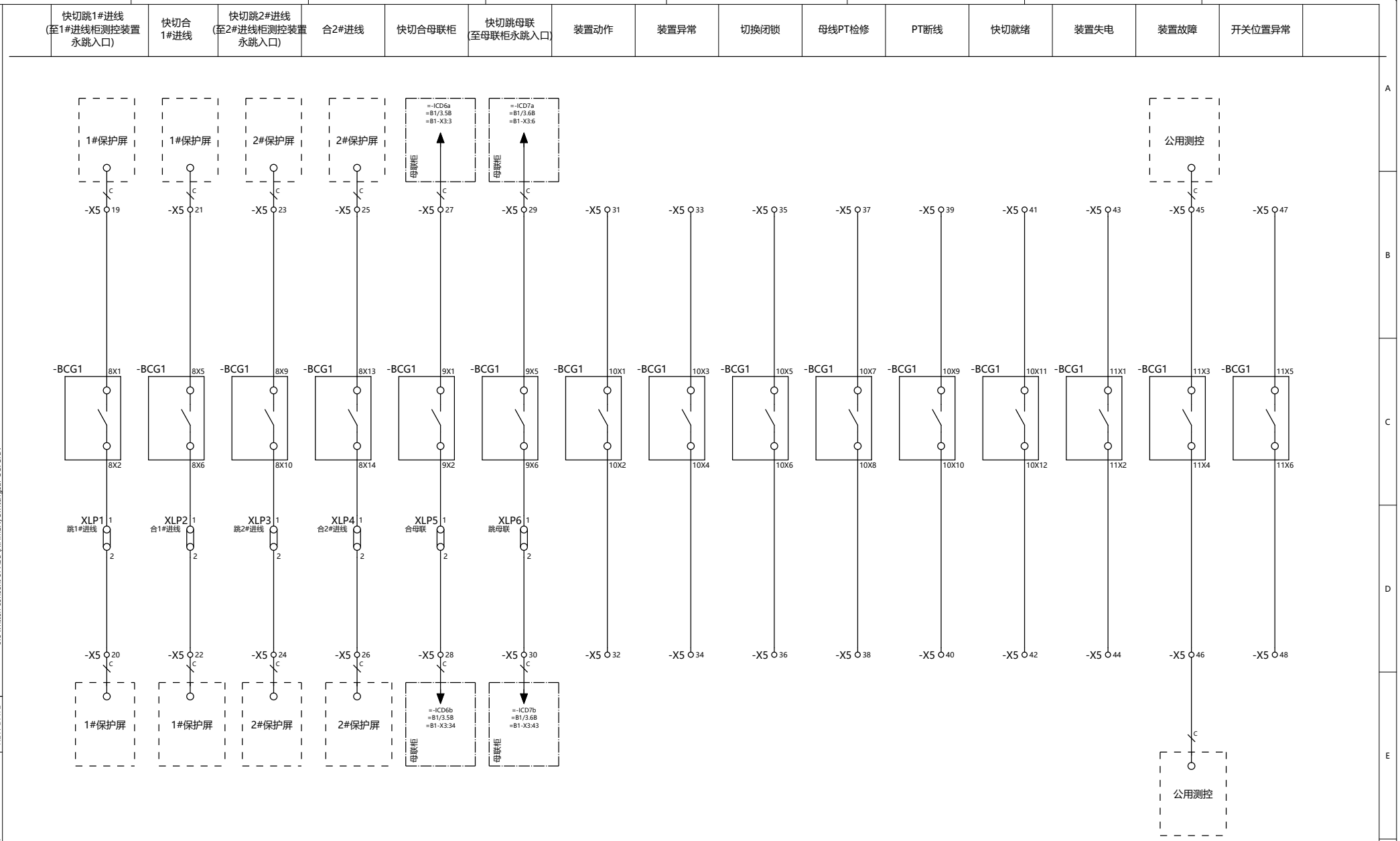

This drawing and information contained thereon is the property of ABB (XIAMEN) Switchgear CO. LTD. and shall not be used, reproduced for any purpose ,or shown to third parties without the written consent of ABB (XIAMEN) Switchgear CO. LTD.

REV.	DESCRIPTION	REV. DATE

DRAWN	XINYU LIU	TITLE	保护备用回路
CHECKED	Jianjun-Wang		
APPROVED	Yongsheng.Li	CONTRACT NO.:	504485024
FIRST DATE	2025/4/28		

FUNCTION: 母联隔离柜

PROJECT: 天津渤化永利丁辛醇项目

= D1 | SHEET NO 8
SCALE 1:1 | TOTAL PAGES 13
DRAWING NO XZS1-48353-A01-D1-S

通讯小母线

保护对时口			
IRGB+	IRGB-	RS485+	RS485-

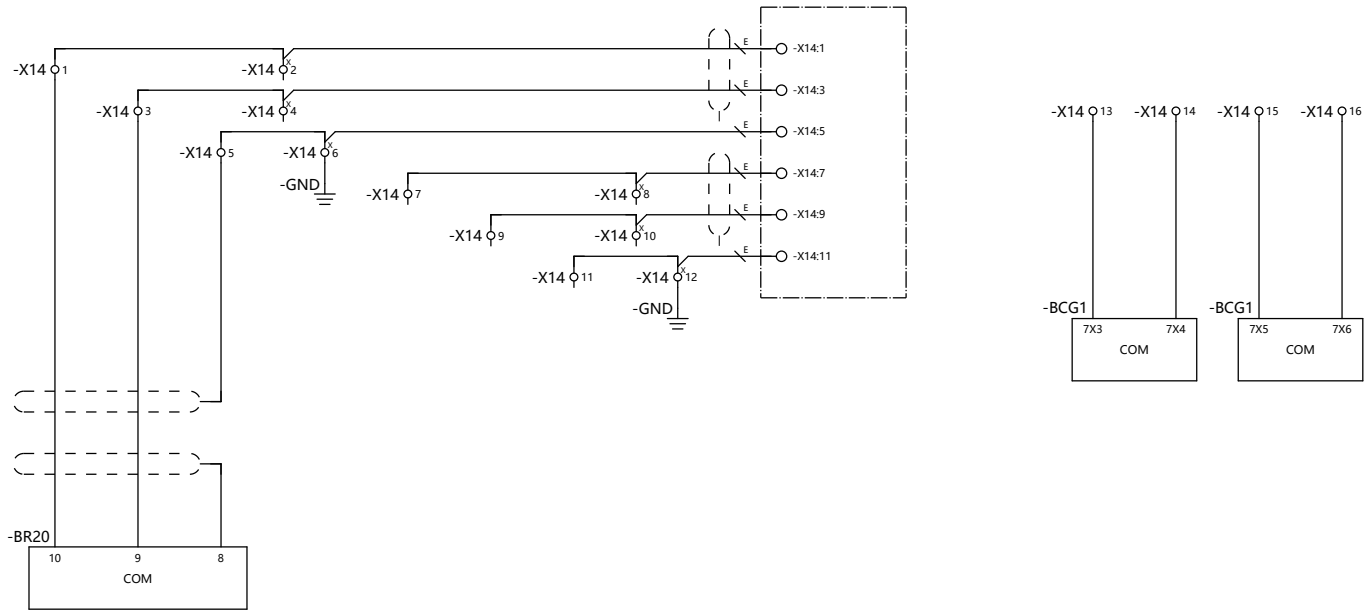

This drawing and information contained thereon is the property of ABB (XIAMEN) Switchgear CO. LTD. and shall not be used, reproduced for any purpose ,or shown to third parties without the written consent of ABB (XIAMEN) Switchgear CO. LTD.

REV.	DESCRIPTION	REV. DATE

DRAWN	XINYU LIU	TITLE	通信回路
CHECKED	Jianjun-Wang		
APPROVED	Yongsheng.Li	CONTRACT NO.:	504485024
FIRST DATE	2025/4/28		

FUNCTION: 母联隔离柜

PROJECT: 天津渤化永利丁辛醇项目

= D1 | SHEET NO 9
SCALE 1:1 | TOTAL PAGES 13
DRAWING NO XZS1-48353-A01-D1-S

MT585 24VDC输出	温湿度控制电源	MT585通讯接口 (与MB585通讯接口)	温湿度控制器通讯	HMI 电源及通讯 示意图

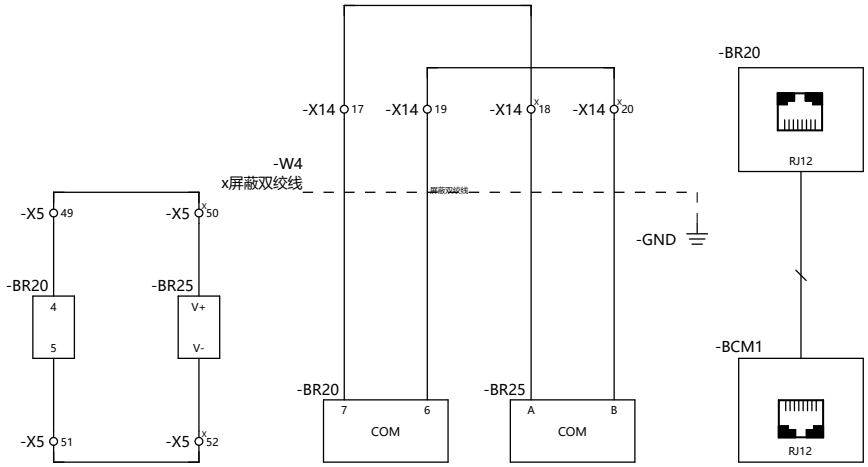

This drawing and information contained thereon is the property of ABB (XIAMEN) Switchgear CO. LTD. and shall not be used, reproduced for any purpose ,or shown to third parties without the written consent of ABB (XIAMEN) Switchgear CO. LTD.

REV.	DESCRIPTION	REV. DATE

DRAWN	XINYU LIU	TITLE	通信回路
CHECKED	Jianjun-Wang		
APPROVED	Yongsheng.Li	CONTRACT NO.:	504485024
FIRST DATE	2025/4/28		

FUNCTION: 母联隔离柜

PROJECT: 天津渤化永利丁辛醇项目

= D1 | SHEET NO 10
SCALE 1:1 | TOTAL PAGES 13
DRAWING NO XZS1-48353-A01-D1-S

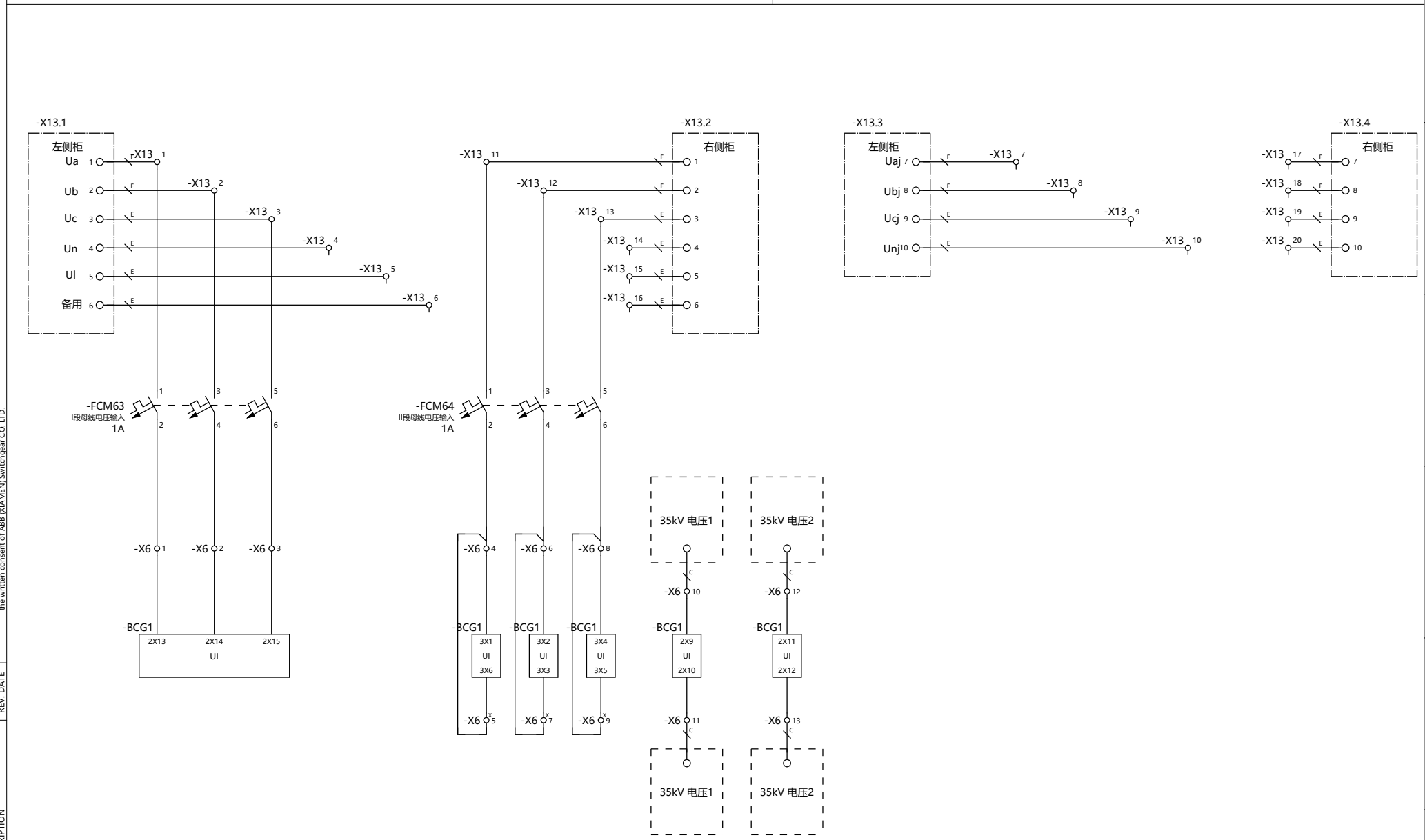

This drawing and information contained thereon is the property of ABB (XIAMEN) Switchgear CO. LTD. and shall not be used, reproduced for any purpose ,or shown to third parties without the written consent of ABB (XIAMEN) Switchgear CO. LTD.

REV.	DESCRIPTION	REV. DATE

DRAWN	XINYU LIU	TITLE	电压小母线
CHECKED	Jianjun-Wang		
APPROVED	Yongsheng.Li	CONTRACT NO.:	504485024
FIRST DATE	2025/4/28		

FUNCTION: 母联隔离柜

PROJECT: 天津渤化永利丁辛醇项目

= D1 | SHEET NO 11
SCALE 1:1 | TOTAL PAGES 13
DRAWING NO XZS1-48353-A01-D1-S

1#进线柜电流输入		2#进线柜电流输入	
A相	C相	A相	C相

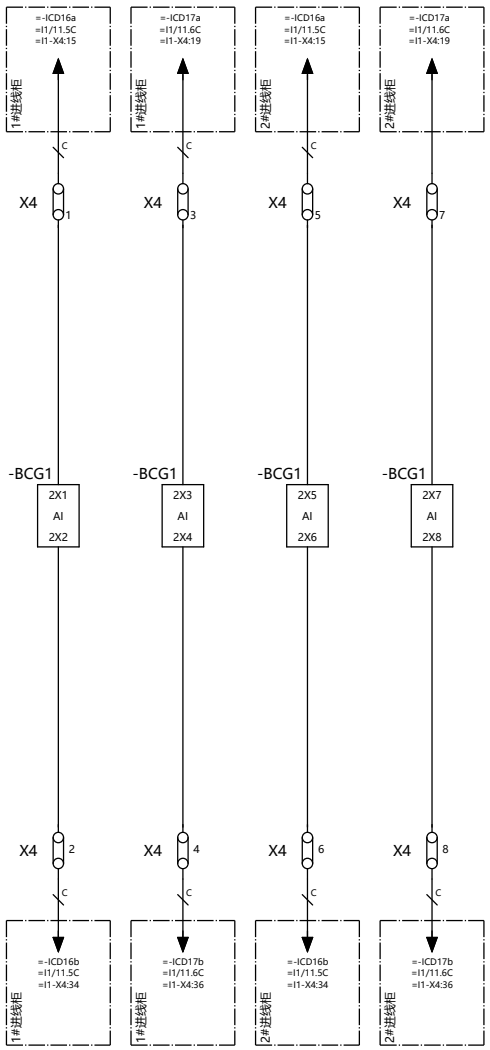

This drawing and information contained thereon is the property of ABB (XIAMEN) Switchgear CO. LTD. and shall not be used, reproduced for any purpose ,or shown to third parties without the written consent of ABB (XIAMEN) Switchgear CO. LTD.

REV.	DESCRIPTION	REV. DATE

DRAWN	XINYU LIU	TITLE	电流回路
CHECKED	Jianjun-Wang		
APPROVED	Yongsheng.Li	CONTRACT NO.:	504485024
FIRST DATE	2025/4/28		

ABB

FUNCTION	母联隔离柜
PROJECT	天津渤化永利丁辛醇项目

=	D1	SHEET NO	12
SCALE	1:1	TOTAL PAGES	13
DRAWING NO	XZS1-48353-A01-D1-S		

Disconnector

-QBD

QS-Y0

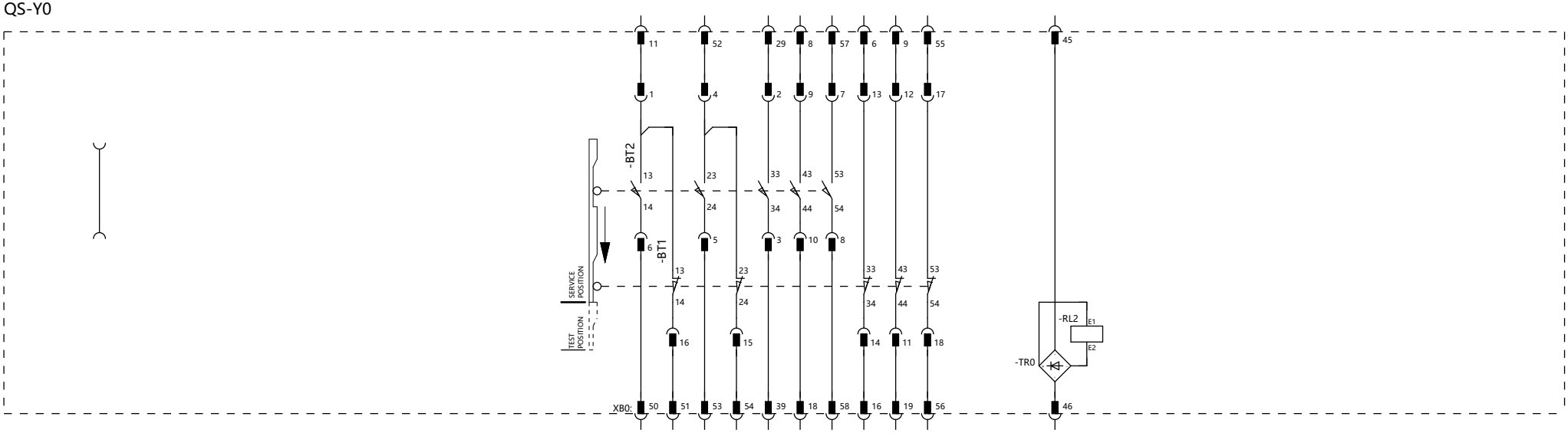

/4.2B /4.2B /7.2C /7.2C /7.4C /7.3C /7.3C /7.1C /7.2C /7.1C /3.2D

名称	描述	备注
-BT1	限位开关(手车位于运行位置)	
-BT2	限位开关(手车位于试验位置)	
-XB0	58针的多功能插座	

名称	描述	备注
-RL2	手车闭锁电磁铁	
-TR0	整流元件	

此图所示状态为:隔离手车位于工作位置

This drawing and information contained thereon is the property of ABB (XIAMEN) Switchgear CO. LTD. and shall not be used, reproduced for any purpose ,or shown to third parties without the written consent of ABB (XIAMEN) Switchgear CO. LTD.

REV.	DESCRIPTION	REV. DATE

DRAWN	XINYU LIU	TITLE	隔离手车接线图
CHECKED	Jianjun-Wang		
APPROVED	Yongsheng.Li	CONTRACT NO.:	504485024
FIRST DATE	2025/4/28		

FUNCTION: 母联隔离柜

PROJECT: 天津渤化永利丁辛醇项目

= D1 | SHEET NO 13 | SCALE 1:1 | TOTAL PAGES 13

DRAWING NO XZS1-48353-A01-D1-S

设备清单(柜体)

序号	设备号	设备名称	物料号	数量	制造商	型号	设备参数
1	-BAD	电容分压装置	DIK-06-B06N1000C	3	ABB	B06N-1000C	Un=7.2kV
2	-EB2	加热器	EP-HEATER-100W	1	SANYANG	1FZEK833B	100W
3	-QBD	隔离手车	QS-Y0	1	ABB	QS	ISOLATING TRUCK With RL2
4	-REL1	闭锁电磁铁	EP-MAGNET	1	PEAKS	EM10-S	/

This drawing and information contained thereon is the property of ABB (XIAMEN) Switchgear CO. LTD. and shall not be used, reproduced for any purpose ,or shown to third parties without the written consent of ABB (XIAMEN) Switchgear CO. LTD.

REV.	DESCRIPTION	REV. DATE

DRAWN	XINYU LIU	TITLE	设备清单(柜体)
CHECKED	Jianjun-Wang		
APPROVED	Yongsheng.Li	CONTRACT NO.:	504485024
FIRST DATE	2025/4/28		

FUNCTION: 母联隔离柜

PROJECT: 天津渤化永利丁辛醇项目

= D1 | SHEET NO 1
SCALE 1:1 | TOTAL PAGES 3
DRAWING NO XZS1-48353-A01-D1-E

设备清单(低压室面板)

序号	设备号	设备名称	物料号	数量	制造商	型号	设备参数
1	-BCG1	快速切换装置	CP-504485024-002	1	南京自动化	WBKQ-01C-M	辅助电源：220V DC
2	-BCM1	就地显示器	RLY-MP58	1	ABB	MP58 （LHMI）	/
3	-PFV1	强制型带电显示器	VIO-DXN-Q-A10-1	1	LEELEN	DXN-Q	DXN-Q 强制型带电显示器UGZS1 3KV/6KV/10kV，辅助电源：AC/DC 220/110V
4	-PFX1	手车位置指示	PIL-ADWZ25-B/2	1	LEELEN	ADWZ25-B/2	98-242V AC/DC,TRUCK POSITION
5	-SB1	黑色按钮	PBA-CP1-10B-11	1	ABB	CP1-10B-11	1NO+1NC,不带标牌套
6	-SB2	黑色按钮	PBA-CP1-10B-11	1	ABB	CP1-10B-11	1NO+1NC,不带标牌套
7	-SB3	黑色按钮	PBA-CP1-10B-11	1	ABB	CP1-10B-11	1NO+1NC,不带标牌套
8	-SFS35	选择开关	SSJ-E02-3-4K7	1	JIANGYIN CHANGJIANG	LW38D-164N5938/3P-AX	
9	-SFS36	选择开关	SSJ-E02-2-5O5	1	JIANGYIN CHANGJIANG	LW38D-164N0393/2P-AX	
10	-XLP1	插拔式压板	T-JY3-2	1	UPUN	JY3-2	驼色
11	-XLP2	插拔式压板	T-JY3-2	1	UPUN	JY3-2	驼色
12	-XLP3	插拔式压板	T-JY3-2	1	UPUN	JY3-2	驼色
13	-XLP4	插拔式压板	T-JY3-2	1	UPUN	JY3-2	驼色
14	-XLP5	插拔式压板	T-JY3-2	1	UPUN	JY3-2	驼色
15	-XLP6	插拔式压板	T-JY3-2	1	UPUN	JY3-2	驼色
16	-XLP7	插拔式压板	T-JY3-2	1	UPUN	JY3-2	驼色
17	-XLP8	插拔式压板	T-JY3-2	1	UPUN	JY3-2	驼色

This drawing and information contained thereon is the property of ABB (XIAMEN) Switchgear CO. LTD. and shall not be used, reproduced for any purpose ,or shown to third parties without the written consent of ABB (XIAMEN) Switchgear CO. LTD.

REV.	DESCRIPTION	REV. DATE

DRAWN	XINYU LIU	TITLE	设备清单(低压室面板)
CHECKED	Jianjun-Wang		
APPROVED	Yongsheng.Li	CONTRACT NO.:	504485024
FIRST DATE	2025/4/28		

FUNCTION: 母联隔离柜

PROJECT: 天津渤化永利丁辛醇项目

= D1 | SHEET NO 2
SCALE 1:1 | TOTAL PAGES 3
DRAWING NO XZS1-48353-A01-D1-E

设备清单(低压室)

序号	设备号	设备名称	物料号	数量	制造商	型号	设备参数
1	-BGD1	微动开关	EP-LVMS	1	PEAKS	TS11-001-01	MECHANICAL LIFE TIME>1000000TIMES
2	-BR20	TEMPERATURE MONITOR	RLY-MT585	1	ABB	MT585	100-240VDC/AC
3	-BR25	Humidity & Temperature Sensor	1YHT010000P0009	1	/	/	/
4	-EA1	LED低压室照明灯	L-CL10-1C-W-AA	1	PEAKS	CL10-1C-W-AA	SUPPLY: AC198~242V; POWER: <4W
5	-FCM20	微型空气开关	MCBA-202M-C3DC;MBDA-S2C-H11R	1;1	ABB	S202M-C3DC;S2C-H11R	Un=440V DC,In=3A,2-POLE
6	-FCM30	微型空气开关	MCBA-202M-C3DC;MBDA-S2C-H11R	1;1	ABB	S202M-C3DC;S2C-H11R	Un=440V DC,In=3A,2-POLE
7	-FCM63	微型空气开关	MCBA-2030001R0014;MBDA-S2C-H11R	1;1	ABB	S203-C1;S2C-H11R	Un=400V AC,In=1A,3-POLE
8	-FCM64	微型空气开关	MCBA-2030001R0014;MBDA-S2C-H11R	1;1	ABB	S203-C1;S2C-H11R	Un=400V AC,In=1A,3-POLE
9	-FCM90	微型空气开关	MCBA-2010001R0034;MBDA-S2C-H11R	1;1	ABB	S201-C3;S2C-H11R	Un=230V AC,In=3A,1-POLE
10	-FCM102	微型空气开关	MCBA-202M-C32DC;MBDA-S2C-H11R	1;1	ABB	S202M-C32DC;S2C-H11R	Un=440V DC,In=32A,2-POLE
11	-FCM302	微型空气开关	MCBA-202M-C32DC;MBDA-S2C-H11R	1;1	ABB	S202M-C32DC;S2C-H11R	Un=440V DC,In=32A,2-POLE
12	-FCM902	微型空气开关	MCBA-2030001R0324;MBDA-S2C-H11R	1;1	ABB	S203-C32;S2C-H11R	Un=400V AC,In=32A,3-POLE

This drawing and information contained thereon is the property of ABB (XIAMEN) Switchgear CO. LTD. and shall not be used, reproduced for any purpose ,or shown to third parties without the written consent of ABB (XIAMEN) Switchgear CO. LTD.

REV.	DESCRIPTION	REV. DATE

DRAWN	XINYU LIU	TITLE	设备清单(低压室)
CHECKED	Jianjun-Wang		
APPROVED	Yongsheng.Li	CONTRACT NO.:	504485024
FIRST DATE	2025/4/28		

FUNCTION: 母联隔离柜

PROJECT: 天津渤化永利丁辛醇项目

= D1 | SHEET NO 3
SCALE 1:1 | TOTAL PAGES 3
DRAWING NO XZS1-48353-A01-D1-E

REV.	DESCRIPTION	REV. DATE

This drawing and information contained thereon is the property of ABB (XIAMEN) Switchgear CO. LTD. and shall not be used, reproduced for any purpose ,or shown to third parties without the written consent of ABB (XIAMEN) Switchgear CO. LTD.

==A01=D1+-X2

备注	外引电缆	设备	线号	端子号	型号	线号	设备	外引电缆	备注
		-FCM20:4		● 1	NEK4		-QBD:11		
				● 2	NEK4		-BR20:1		
				● 3	NEK4		-BCG1:1X1		
	△	=I1-X5:26		● 4	NEK4				
	△	=I1-X5:26		● 5	NEK4				
	△	=P1-X5:1		● 6	NEK4				
				● 7	NEK4		-SFS35:3		
	△	-1#主变保护		● 8	NEK4				
	△	-2#主变保护		● 9	NEK4				
	△	=B1-X5:20		● 10	NEK4				
	△	=P1-X5:1		● 11	NEK4				
				● 12	NEK4		-SB2:13		
	△	-保护组屏		● 13	NEK4				
				● 14	NEK4		-SFS36:3		
				● 15	NEK4		-SB1:13		
				● 16	NEK4		-SB3:13		
				● 17	NEK4				
	△	-保护组屏		● 18	NEK4				
				● 19	NEK4				
		-FCM20:2		● 20	NEK4		-PFX1:1		
				● 21	NEK4		-BR20:2		
				● 22	NEK4		-BCG1:1X2		
				● 23	NEK4		-BCG1:4X10		
				● 24	NEK4		-BCG1:5X10		
				● 25	NEK4				
		-QBD:51		ı 26	NEK4		-PFX1:3		
		-QBD:50		ı 27	NEK4		-PFX1:2		
	△	=I1-X5:27		ı 28	NEK4		-BCG1:4X1		
	△	=I1-X5:27		ı 29	NEK4		-BCG1:4X2		
	△	=P1-X5:2		ı 30	NEK4		-BCG1:4X3		
		-SFS35:4		ı 31	NEK4		-BCG1:4X4		
	△	-1#主变保护		● 32	NEK4		-BCG1:4X5		
	△	-2#主变保护		● 33	NEK4				
				ı 34	NEK4		-BCG1:4X6		
	△	=B1-X5:21		ı 35	NEK4		-BCG1:4X7		
	△	=P1-X5:2		ı 36	NEK4		-BCG1:4X8		
		-SB2:14		ı 37	NEK4		-BCG1:5X1		
	△	-保护组屏		ı 38	NEK4		-BCG1:5X2		
		-SB1:14		ı 39	NEK4		-BCG1:5X4		
		-SB3:14		ı 40	NEK4		-BCG1:5X5		
				ı 41	NEK4		-BCG1:5X6		
	△	-保护组屏		ı 42	NEK4		-BCG1:5X7		
				ı 43	NEK4		-BCG1:5X8		
				ı 44	NEK4		-XLP7:1		
				ı 45	NEK4		-XLP7:2		
				ı 46	NEK4		-XLP8:1		
				ı 47	NEK4		-XLP8:2		

☆ 柜间小母线,随柜提供

△ 柜间控制电路(由客户自备)

短接排

✕ 分隔板

(测试短接片

O 其他

DRAWN	XINYU LIU	TITLE
CHECKED	Jianjun-Wang	端子图表 ==A01=D1+-X2
APPROVED	Yongsheng.Li	CONTRACT NO.:
FIRST DATE	2025/4/28	504485024
REV. DATE		

FUNCTION: 母联隔离柜

PROJECT: 天津渤化永利丁辛醇项目

=	D1	SHEET NO. 1
SCALE	1:1	TOTAL PAGES 10
DRAWING NO.	XZS1-48353-A01-D1-T	

REV. DESCRIPTION

REV.	DESCRIPTION	REV. DATE

This drawing and information contained thereon is the property of ABB (XIAMEN) Switchgear CO. LTD. and shall not be used, reproduced for any purpose ,or shown to third parties without the written consent of ABB (XIAMEN) Switchgear CO. LTD.

==A01=D1+-X3

备注	外引电缆	设备	线号	端子号	型号	线号	设备	外引电缆	备注
	△	=B1-X5:34		● 1	NEK4		-FCM30:4		
				● 2	NEK4		-PFV1:220V		
				● 3	NEK4				
		-FCM30:2		● 4	NEK4		-QBD:46		
				● 5	NEK4		-PFV1:0V		
				● 6	NEK4		-REL1:E2		
				● 7	NEK4				
	△	=B1-X5:35		8	NEK4		-QBD:45		
		-PFV1:COM		9	NEK4		-REL1:E1		

☆ 柜间小母线,随柜提供

△ 柜间控制电路(由客户自备)

● 短接排

✕ 分隔板

(测试短接片

O 其他

DRAWN	XINYU LIU	TITLE
CHECKED	Jianjun-Wang	端子图表 ==A01=D1+-X3
APPROVED	Yongsheng.Li	CONTRACT NO.: 504485024
FIRST DATE	2025/4/28	
REV. DATE		
DESCRIPTION		

FUNCTION 母联隔离柜

PROJECT 天津渤化永利丁辛醇项目

=	D1	SHEET NO. 2
SCALE	1:1	TOTAL PAGES 10
DRAWING NO. XZS1-48353-A01-D1-T		

==A01=D1+-X4

备注	外引电缆	设备	线号	端子号	型号	线号	设备	外引电缆	备注
	△	=I1-X4:15		1	NEK6S		-BCG1:2X1		
	△	=I1-X4:34		2	NEK6S		-BCG1:2X2		
	△	=I1-X4:19		3	NEK6S		-BCG1:2X3		
	△	=I1-X4:36		4	NEK6S		-BCG1:2X4		
	△	=I1-X4:15		5	NEK6S		-BCG1:2X5		
	△	=I1-X4:34		6	NEK6S		-BCG1:2X6		
	△	=I1-X4:19		7	NEK6S		-BCG1:2X7		
	△	=I1-X4:36		8	NEK6S		-BCG1:2X8		

☆ 柜间小母线,厢柜提供

△ 柜间控制电路(由客户自备)

短接排

分隔板

测试短接片

其他

This drawing and information contained thereon is the property of ABB (XIAMEN) Switchgear CO. LTD. and shall not be used, reproduced for any purpose ,or shown to third parties without the written consent of ABB (XIAMEN) Switchgear CO.LTD.

REV.	DESCRIPTION	REV. DATE

DRAWN	XINYU LIU	TITLE	端子图表 ==A01=D1+-X4
CHECKED	Jianjun-Wang		
APPROVED	Yongsheng.Li	CONTRACT NO.:	504485024
FIRST DATE	2025/4/28		

ABB

FUNCTION: 母联隔离柜

PROJECT: 天津渤化永利丁辛醇项目

= D1 | SHEET NO 3

SCALE 1:1 | TOTAL PAGES 10

DRAWING NO XZS1-48353-A01-D1-T

REV.	DESCRIPTION	REV. DATE

This drawing and information contained thereon is the property of ABB (XIAMEN) Switchgear CO. LTD. and shall not be used, reproduced for any purpose ,or shown to third parties without the written consent of ABB (XIAMEN) Switchgear CO. LTD.

==A01=D1+-X5

备注	外引电缆	设备	线号	端子号	型号	线号	设备	外引电缆	备注
				1	NEK4		-QBD:55		
				2	NEK4		-QBD:56		
				3	NEK4		-QBD:6		
				4	NEK4		-QBD:16		
	△	=B1-X3:29		5	NEK4		-QBD:9		
	△	=B1-X3:30		6	NEK4		-QBD:19		
	△	=B1-X2:49		7	NEK4		-QBD:54		
	△	=B1-X2:17		8	NEK4		-QBD:52		
	△	=B1-X2:50		9	NEK4		-QBD:53		
				10	NEK4		-QBD:8		
				11	NEK4		-QBD:18		
				12	NEK4		-QBD:57		
				13	NEK4		-QBD:58		
				14	NEK4		-QBD:29		
				15	NEK4		-QBD:39		
				16	NEK4		-FCM90:11		
		-FCM20:11		17	RCT4SW		-FCM90:11		
				18	NEK4		-FCM902:12		
	△	-1#保护屏		19	NEK4		-BCG1:8X1		
	△	-1#保护屏		20	NEK4		-XLP1:2		
	△	-1#保护屏		21	NEK4		-BCG1:8X5		
	△	-1#保护屏		22	NEK4		-XLP2:2		
	△	-2#保护屏		23	NEK4		-BCG1:8X9		
	△	-2#保护屏		24	NEK4		-XLP3:2		
	△	-2#保护屏		25	NEK4		-BCG1:8X13		
	△	-2#保护屏		26	NEK4		-XLP4:2		
	△	=B1-X3:3		27	NEK4		-BCG1:9X1		
	△	=B1-X3:34		28	NEK4		-XLP5:2		
	△	=B1-X3:6		29	NEK4		-BCG1:9X5		
	△	=B1-X3:43		30	NEK4		-XLP6:2		
				31	NEK4		-BCG1:10X1		
				32	NEK4		-BCG1:10X2		
				33	NEK4		-BCG1:10X3		
				34	NEK4		-BCG1:10X4		
				35	NEK4		-BCG1:10X5		
				36	NEK4		-BCG1:10X6		
				37	NEK4		-BCG1:10X7		
				38	NEK4		-BCG1:10X8		
				39	NEK4		-BCG1:10X9		
				40	NEK4		-BCG1:10X10		
				41	NEK4		-BCG1:10X11		
				42	NEK4		-BCG1:10X12		
				43	NEK4		-BCG1:11X1		
				44	NEK4		-BCG1:11X2		
	△	-公用测控		45	NEK4		-BCG1:11X3		
	△	-公用测控		46	NEK4		-BCG1:11X4		
				47	NEK4		-BCG1:11X5		
				48	NEK4		-BCG1:11X6		
				49	NEK4		-BR20:4		
				50	NEK4		-BR25:V+		
				51	NEK4		-BR20:5		
				52	NEK4		-BR25:V-		
				53	NEK4				
				54	NEK4				

☆ 柜间小母线,随柜提供

△ 柜间控制电路(由客户自备)

短接排

× 分隔板

(测试短接片

O 其他

REV.	DESCRIPTION	REV. DATE		
		DRAWN	XINYU LIU	TITLE
		CHECKED	Jianjun-Wang	端子图表 ==A01=D1+-X5
		APPROVED	Yongsheng.Li	CONTRACT NO.:
		FIRST DATE	2025/4/28	504485024

FUNCTION 母联隔离柜

PROJECT 天津渤化永利丁辛醇项目

=	D1	SHEET NO.	4
SCALE	1:1	TOTAL PAGES	10

DRAWING NO. XZS1-48353-A01-D1-T

==A01=D1+-X5

备注	外引电缆	设备	线号	型号	端子号	线号	设备	外引电缆	备注
				NEK4	ı 55				
				NEK4	ı 56				
				NEK4	ı 57				
				NEK4	ı 58				
				NEK4	ı 59				
				NEK4	ı 60				
				NEK4	ı 61				
				NEK4	ı 62				

☆ 柜间小母线,厢柜提供

△ 柜间控制电路(由客户自备)

短接排

分隔板

测试短接片

其他

This drawing and information contained thereon is the property of ABB (XIAMEN) Switchgear CO. LTD. and shall not be used, reproduced for any purpose ,or shown to third parties without the written consent of ABB (XIAMEN) Switchgear CO.LTD.

REV.	DESCRIPTION	REV. DATE

DRAWN	XINYU LIU	TITLE	端子图表 ==A01=D1+-X5
CHECKED	Jianjun-Wang		
APPROVED	Yongsheng.Li	CONTRACT NO.:	504485024
FIRST DATE	2025/4/28		

FUNCTION: 母联隔离柜

PROJECT: 天津渤化永利丁辛醇项目

= D1 | SHEET NO 4.a

SCALE 1:1 | TOTAL PAGES 10

DRAWING NO XZS1-48353-A01-D1-T

REV.	DESCRIPTION	REV. DATE

This drawing and information contained thereon is the property of ABB (XIAMEN) Switchgear CO. LTD. and shall not be used, reproduced for any purpose ,or shown to third parties without the written consent of ABB (XIAMEN) Switchgear CO. LTD.

==A01=D1+-X6

备注	外引电缆	设备	线号	端子号	型号	线号	设备	外引电缆	备注
		-FCM63:2		1	NEK4		-BCG1:2X13		
		-FCM63:4		2	NEK4		-BCG1:2X14		
		-FCM63:6		3	NEK4		-BCG1:2X15		
		-FCM64:2		4	NEK4		-BCG1:3X1		
				5	NEK4		-BCG1:3X6		
		-FCM64:4		6	NEK4		-BCG1:3X2		
				7	NEK4		-BCG1:3X3		
		-FCM64:6		8	NEK4		-BCG1:3X4		
				9	NEK4		-BCG1:3X5		
	△	-35kV 电压1		10	NEK4		-BCG1:2X9		
	△	-35kV 电压1		11	NEK4		-BCG1:2X10		
	△	-35kV 电压2		12	NEK4		-BCG1:2X11		
	△	-35kV 电压2		13	NEK4		-BCG1:2X12		

☆ 柜间小母线,随柜提供

△ 柜间控制电路(由客户自备)

短接排

分隔板

(测试短接片

O 其他

REV.		
DESCRIPTION		
REV. DATE		
DRAWN	XINYU LIU	TITLE
CHECKED	Jianjun-Wang	端子图表 ==A01=D1+-X6
APPROVED	Yongsheng.Li	CONTRACT NO.:
FIRST DATE	2025/4/28	504485024
FUNCTION	母联隔离柜	
PROJECT	天津渤化永利丁辛醇项目	
=	D1	SHEET NO. 5
SCALE	1:1	TOTAL PAGES 10
DRAWING NO.	XZS1-48353-A01-D1-T	

REV.	DESCRIPTION	REV. DATE

This drawing and information contained thereon is the property of ABB (XIAMEN) Switchgear CO. LTD. and shall not be used, reproduced for any purpose ,or shown to third parties without the written consent of ABB (XIAMEN) Switchgear CO. LTD.

==A01=D1+-X9

备注	外引电缆	设备	线号	端子号	型号	线号	设备	外引电缆	备注
				1	NEK4		-EB2:1		
		-FCM90:2		2	NEK4		-BGD1:1		
				3	NEK4		-EB2:2		
		-X11:4		4	NEK4		-EA1:A2		
		-EA1:A1		5	RCT4SW		-BGD1:2		

☆ 柜间小母线,随柜提供

△ 柜间控制电路(由客户自备)

短接排

✕ 分隔板

(测试短接片

O 其他

DRAWN	XINYU LIU	TITLE
CHECKED	Jianjun-Wang	端子图表 ==A01=D1+-X9
APPROVED	Yongsheng.Li	CONTRACT NO.: 504485024
FIRST DATE	2025/4/28	
REV. DATE		
DESCRIPTION		

FUNCTION 母联隔离柜

PROJECT 天津渤化永利丁辛醇项目

=	D1	SHEET NO. 6
SCALE	1:1	TOTAL PAGES 10
DRAWING NO. XZS1-48353-A01-D1-T		

REV.	DESCRIPTION	REV. DATE

This drawing and information contained thereon is the property of ABB (XIAMEN) Switchgear CO. LTD. and shall not be used, reproduced for any purpose ,or shown to third parties without the written consent of ABB (XIAMEN) Switchgear CO. LTD.

==A01=D1+-X11

备注	外引电缆	设备	线号	端子号	型号	线号	设备	外引电缆	备注
6黑色	☆	-X11.1:1		1	A3C 6		-FCM90:1		
							-FCM902:1		6黑色
6黑色	☆	-X11.1:2		2	A3C 6		-FCM902:3		6黑色
6黑色	☆	-X11.1:3		3	A3C 6		-FCM902:5		6黑色
6黑色	☆	-X11.1:4		4	A3C 6		-X9:4		
							-X11:12		6黑色
6黑色	☆	-X11.1:5		5	A3C 6		-FCM102:4		6黑色
6黑色	☆	-X11.1:6		6	A3C 6		-FCM102:2		6黑色
6黑色	☆	-X11.1:7		7	A3C 6		-FCM30:3		
							-FCM302:4		6黑色
6黑色	☆	-X11.1:8		8	A3C 6		-FCM30:1		
							-FCM302:2		6黑色
6黑色	☆	-X11.2:1		9	A3C 6		-FCM902:2		6黑色
6黑色	☆	-X11.2:2		10	A3C 6		-FCM902:4		6黑色
6黑色	☆	-X11.2:3		11	A3C 6		-FCM902:6		6黑色
6黑色	☆	-X11.2:4		12	A3C 6		-X11:4		6黑色
6黑色	☆	-X11.2:5		13	A3C 6		-FCM102:3		6黑色
6黑色	☆	-X11.2:6		14	A3C 6		-FCM102:1		6黑色
6黑色	☆	-X11.2:7		15	A3C 6		-FCM302:3		6黑色
6黑色	☆	-X11.2:8		16	A3C 6		-FCM302:1		6黑色

☆ 柜间小母线,随柜提供

△ 柜间控制电路(由客户自备)

短接排

分隔板

(测试短接片

O 其他

REV.	DESCRIPTION	REV. DATE		
		DRAWN	XINYU LIU	TITLE
		CHECKED	Jianjun-Wang	端子图表 ==A01=D1+-X11
		APPROVED	Yongsheng.Li	CONTRACT NO.:
		FIRST DATE	2025/4/28	504485024

FUNCTION: 母联隔离柜

PROJECT: 天津渤化永利丁辛醇项目

=	D1	SHEET NO.	7
SCALE	1:1	TOTAL PAGES	10

DRAWING NO. XZS1-48353-A01-D1-T

REV.	DESCRIPTION	REV. DATE

This drawing and information contained thereon is the property of ABB (XIAMEN) Switchgear CO. LTD. and shall not be used, reproduced for any purpose ,or shown to third parties without the written consent of ABB (XIAMEN) Switchgear CO. LTD.

==A01=D1+-X13

备注	外引电缆	设备	线号	端子号	型号	线号	设备	外引电缆	备注
	☆	-X13.1:1		1	A4C 4		-FCM63:1		
	☆	-X13.1:2		2	A4C 4		-FCM63:3		
	☆	-X13.1:3		3	A4C 4		-FCM63:5		
	☆	-X13.1:4		4	A4C 4				
	☆	-X13.1:5		5	A4C 4				
	☆	-X13.1:6		6	A4C 4				
	☆	-X13.3:7		7	A4C 4				
	☆	-X13.3:8		8	A4C 4				
	☆	-X13.3:9		9	A4C 4				
	☆	-X13.3:10		10	A4C 4				
	☆	-X13.2:1		11	A4C 4		-FCM64:1		
	☆	-X13.2:2		12	A4C 4		-FCM64:3		
	☆	-X13.2:3		13	A4C 4		-FCM64:5		
	☆	-X13.2:4		14	A4C 4				
	☆	-X13.2:5		15	A4C 4				
	☆	-X13.2:6		16	A4C 4				
	☆	-X13.4:7		17	A4C 4				
	☆	-X13.4:8		18	A4C 4				
	☆	-X13.4:9		19	A4C 4				
	☆	-X13.4:10		20	A4C 4				

☆ 柜间小母线,随柜提供

△ 柜间控制电路(由客户自备)

短接排

分隔板

(测试短接片

O 其他

DRAWN	XINYU LIU
CHECKED	Jianjun-Wang
APPROVED	Yongsheng.Li
FIRST DATE	2025/4/28
REV. DATE	
REV.	
DESCRIPTION	

TITLE: 端子图表 ==A01=D1+-X13

CONTRACT NO.: 504485024

FUNCTION: 母联隔离柜

PROJECT: 天津渤化永利丁辛醇项目

=	D1
SCALE	1:1
SHEET NO.	8
TOTAL PAGES	10
DRAWING NO.	XZS1-48353-A01-D1-T

REV.	DESCRIPTION	REV. DATE

This drawing and information contained thereon is the property of ABB (XIAMEN) Switchgear CO. LTD. and shall not be used, reproduced for any purpose ,or shown to third parties without the written consent of ABB (XIAMEN) Switchgear CO. LTD.

==A01=D1+-X14

备注	外引电缆	设备	线号	端子号	型号	线号	设备	外引电缆	备注
				1	NEK4		-BR20:10		
	☆	-X14:1		2	NEK4				
				3	NEK4		-BR20:9		
	☆	-X14:3		4	NEK4				
				5	NEK4		-ST1		
	☆	-X14:5		6	NEK4		-GND		
				7	NEK4				
	☆	-X14:7		8	NEK4				
				9	NEK4				
	☆	-X14:9		10	NEK4				
				11	NEK4				
	☆	-X14:11		12	NEK4		-GND		
				13	NEK4		-BCG1:7X3		
				14	NEK4		-BCG1:7X4		
				15	NEK4		-BCG1:7X5		
				16	NEK4		-BCG1:7X6		
				17	NEK4		-BR20:7		
				18	NEK4		-BR25:A		
				19	NEK4		-BR20:6		屏蔽双绞线
				20	NEK4		-BR25:B		

☆ 柜间小母线,随柜提供

△ 柜间控制电路(由客户自备)

短接排

✕ 分隔板

(测试短接片

O 其他

DRAWN	XINYU LIU	TITLE
CHECKED	Jianjun-Wang	端子图表 ==A01=D1+-X14
APPROVED	Yongsheng.Li	CONTRACT NO.:
FIRST DATE	2025/4/28	504485024
REV. DATE		
REV.		
DESCRIPTION		

FUNCTION 母联隔离柜

PROJECT 天津渤化永利丁辛醇项目

=	D1	SHEET NO.	9
SCALE	1:1	TOTAL PAGES	10

DRAWING NO. XZS1-48353-A01-D1-T

单线图

一次设备索引			
设备号	设备名称	数量	物料号
-QBT	电压互感器手车	1	QTV-BW2-FS-DJS-504485024
-FCF	高压熔断器	3	FLX-1200020I194N
-BAT1	电压互感器	1	VTS-G06111-GG8221
-BAT2	电压互感器	1	VTS-G06111-GG8221
-BAT3	电压互感器	1	VTS-G06111-GG8221
-FA	避雷器	3	SAS-YH5WZ6-10/27-3
-BAD	电容分压装置	3	DIK-06-B06N1000C-1

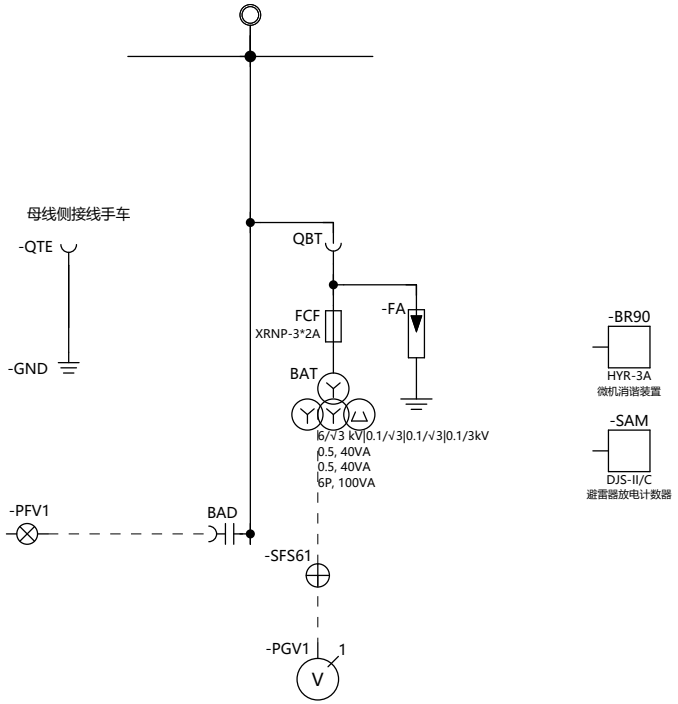

This drawing and information contained thereon is the property of ABB (XIAMEN) Switchgear CO. LTD. and shall not be used, reproduced for any purpose ,or shown to third parties without the written consent of ABB (XIAMEN) Switchgear CO. LTD.

REV.	DESCRIPTION	REV. DATE

DRAWN	XINYU LIU	TITLE	单线图
CHECKED	Jianjun-Wang		
APPROVED	Yongsheng.Li	CONTRACT NO.:	504485024
FIRST DATE	2025/4/28		

FUNCTION: PT柜

PROJECT: 天津渤化永利丁辛醇项目

= P1 | SHEET NO 1
SCALE 1:1 | TOTAL PAGES 9
DRAWING NO XZS1-48353-A01-P1-S

信号与闭锁回路	加热器回路	低压室照明
	电缆室 100W	

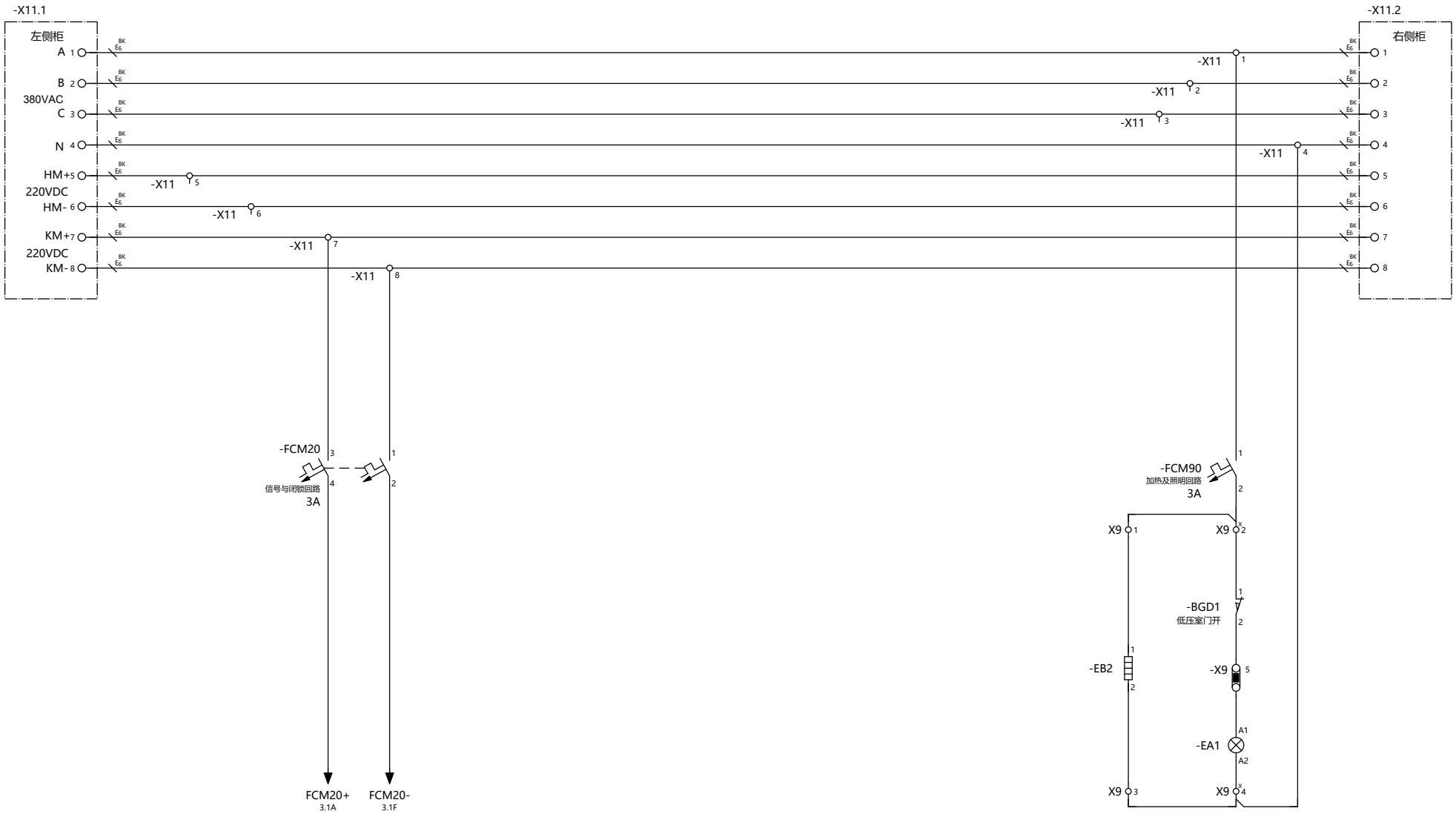

This drawing and information contained thereon is the property of ABB (XIAMEN) Switchgear CO. LTD. and shall not be used, reproduced for any purpose ,or shown to third parties without the written consent of ABB (XIAMEN) Switchgear CO. LTD.

REV.	DESCRIPTION	REV. DATE

DRAWN	XINYU LIU	TITLE	电源小母线回路
CHECKED	Jianjun-Wang		
APPROVED	Yongsheng.Li	CONTRACT NO.:	504485024
FIRST DATE	2025/4/28		

FUNCTION: PT柜

PROJECT: 天津渤化永利丁辛醇项目

= P1 | SHEET NO 2 | SCALE 1:1 | TOTAL PAGES 9

DRAWING NO XZS1-48353-A01-P1-S

PT手车位置		接地手车闭锁回路	避雷器计数器电源	微机消谐装置电源	带电显示电源
工作	试验				

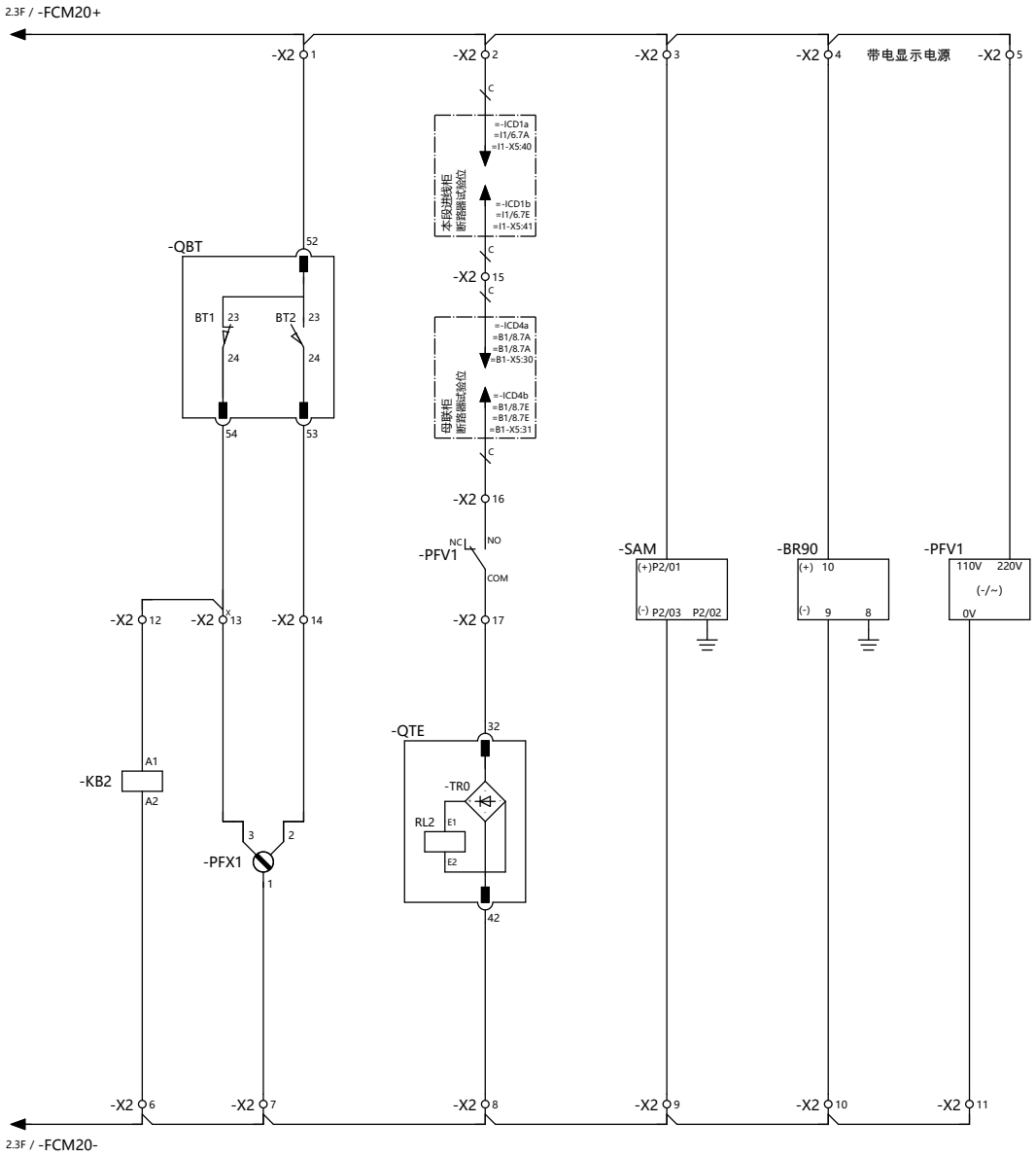

This drawing and information contained thereon is the property of ABB (XIAMEN) Switchgear CO. LTD. and shall not be used, reproduced for any purpose ,or shown to third parties without the written consent of ABB (XIAMEN) Switchgear CO. LTD.

REV.	DESCRIPTION	REV. DATE

DRAWN	XINYU LIU	TITLE	信号与闭锁回路
CHECKED	Jianjun-Wang		
APPROVED	Yongsheng.Li	CONTRACT NO.:	504485024
FIRST DATE	2025/4/28		

ABB

FUNCTION	PT柜
PROJECT	天津渤化永利丁辛醇项目

=	P1	SHEET NO	3
SCALE	1:1	TOTAL PAGES	9
DRAWING NO	XZS1-48353-A01-P1-S		

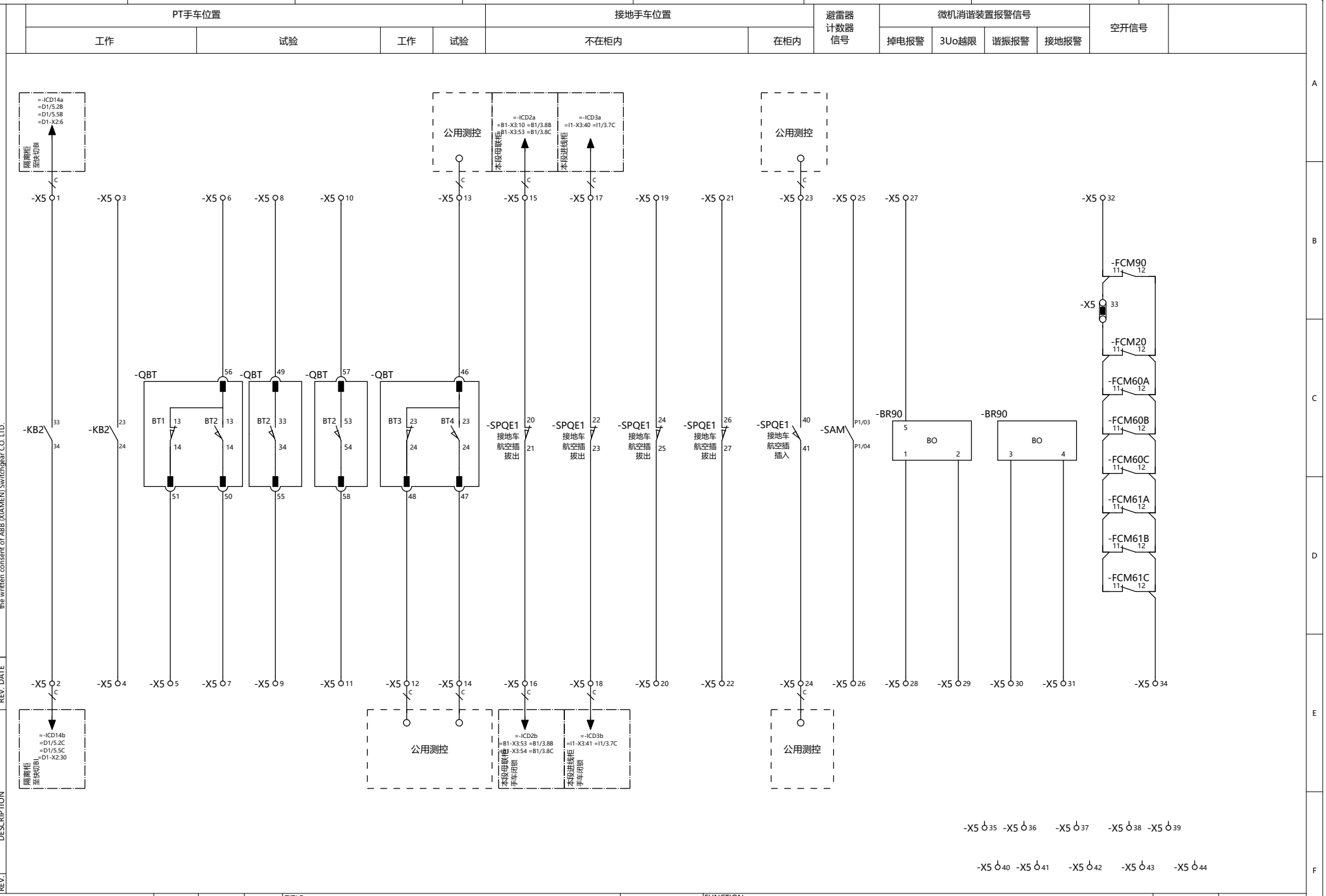

This drawing and information contained thereon is the property of ABB (XIAMEN) Switchgear CO. LTD. and shall not be used, reproduced for any purpose, or shown to third parties without the written consent of ABB (XIAMEN) Switchgear CO. LTD.

REV.	DESCRIPTION	REV. DATE

DRAWN	XINYU LIU	TITLE	备用回路
CHECKED	Jianjun-Wang		
APPROVED	Yongsheng.Li	CONTRACT NO.:	504485024
FIRST DATE	2025/4/28		

FUNCTION: PT柜

PROJECT: 天津渤化永利丁辛醇项目

= P1	SHEET NO 4
SCALE 1:1	TOTAL PAGES 9
DRAWING NO XZS1-48353-A01-P1-S	

电压回路

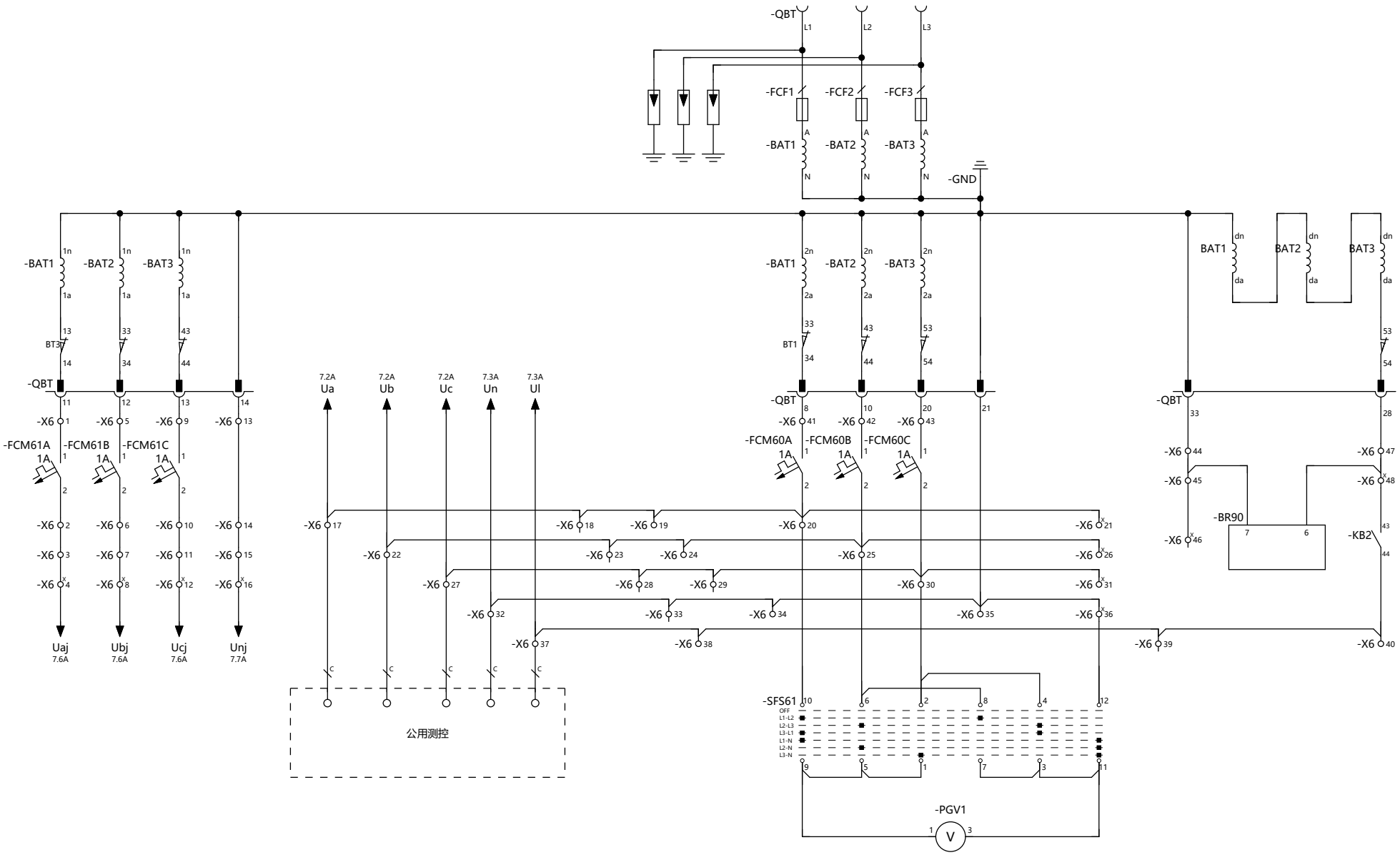

This drawing and information contained thereon is the property of ABB (XIAMEN) Switchgear CO. LTD. and shall not be used, reproduced for any purpose, or shown to third parties without the written consent of ABB (XIAMEN) Switchgear CO. LTD.

REV.	DESCRIPTION	REV. DATE

DRAWN	XINYU LIU	TITLE	PT回路YY开口三角
CHECKED	Jianjun-Wang		
APPROVED	Yongsheng.Li	CONTRACT NO.:	504485024
FIRST DATE	2025/4/28		

FUNCTION: PT柜

PROJECT: 天津渤化永利丁辛醇项目

= P1	SHEET NO 5
SCALE 1:1	TOTAL PAGES 9
DRAWING NO	XZS1-48353-A01-P1-S

避雷器计数器通讯	微机消谐通讯口	避雷器计数器连接

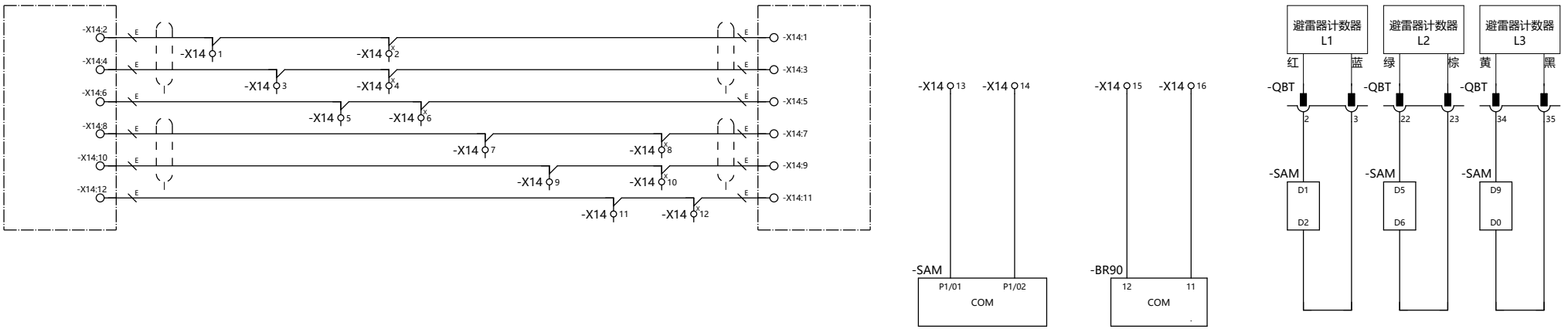

This drawing and information contained thereon is the property of ABB (XIAMEN) Switchgear CO. LTD. and shall not be used, reproduced for any purpose ,or shown to third parties without the written consent of ABB (XIAMEN) Switchgear CO. LTD.

REV.	DESCRIPTION	REV. DATE

DRAWN	XINYU LIU	TITLE	通信回路
CHECKED	Jianjun-Wang		
APPROVED	Yongsheng.Li	CONTRACT NO.:	504485024
FIRST DATE	2025/4/28		

ABB

FUNCTION	PT柜
PROJECT	天津渤化永利丁辛醇项目

= P1		SHEET NO	6
SCALE	1:1	TOTAL PAGES	9
DRAWING NO	XZS1-48353-A01-P1-S		

电压小母线

计量小母线

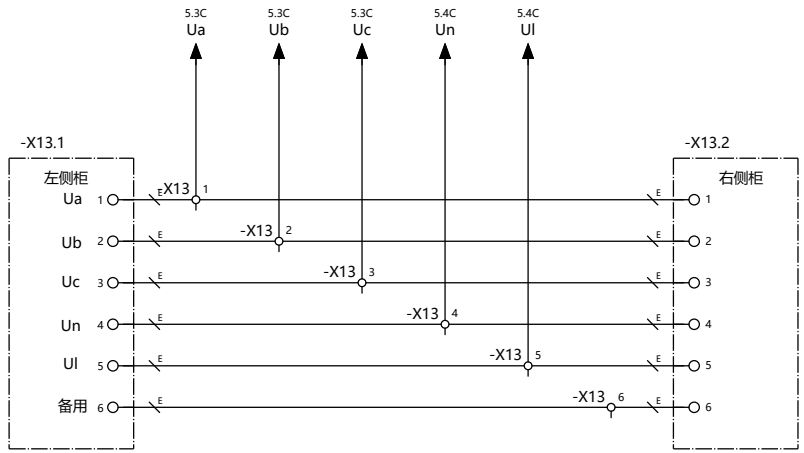

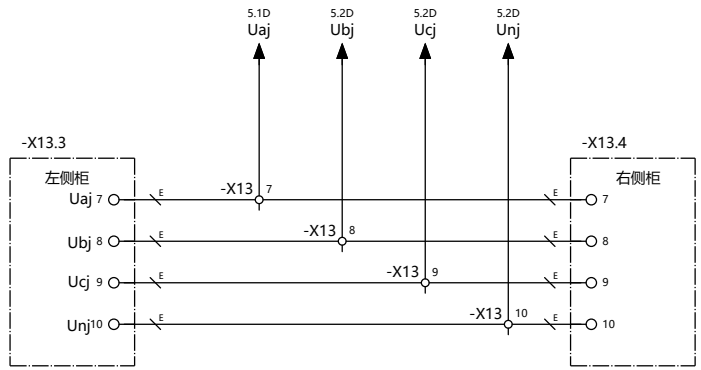

This drawing and information contained thereon is the property of ABB (XIAMEN) Switchgear CO. LTD. and shall not be used, reproduced for any purpose ,or shown to third parties without the written consent of ABB (XIAMEN) Switchgear CO. LTD.

REV.	DESCRIPTION	REV. DATE

DRAWN	XINYU LIU	TITLE	电压小母线
CHECKED	Jianjun-Wang		
APPROVED	Yongsheng.Li	CONTRACT NO.:	504485024
FIRST DATE	2025/4/28		

FUNCTION: PT柜

PROJECT: 天津渤化永利丁辛醇项目

= P1 | SHEET NO 7
SCALE 1:1 | TOTAL PAGES 9
DRAWING NO XZS1-48353-A01-P1-S

VT Truck

-QBT

QTV-BW2-FS-DJS-504485024

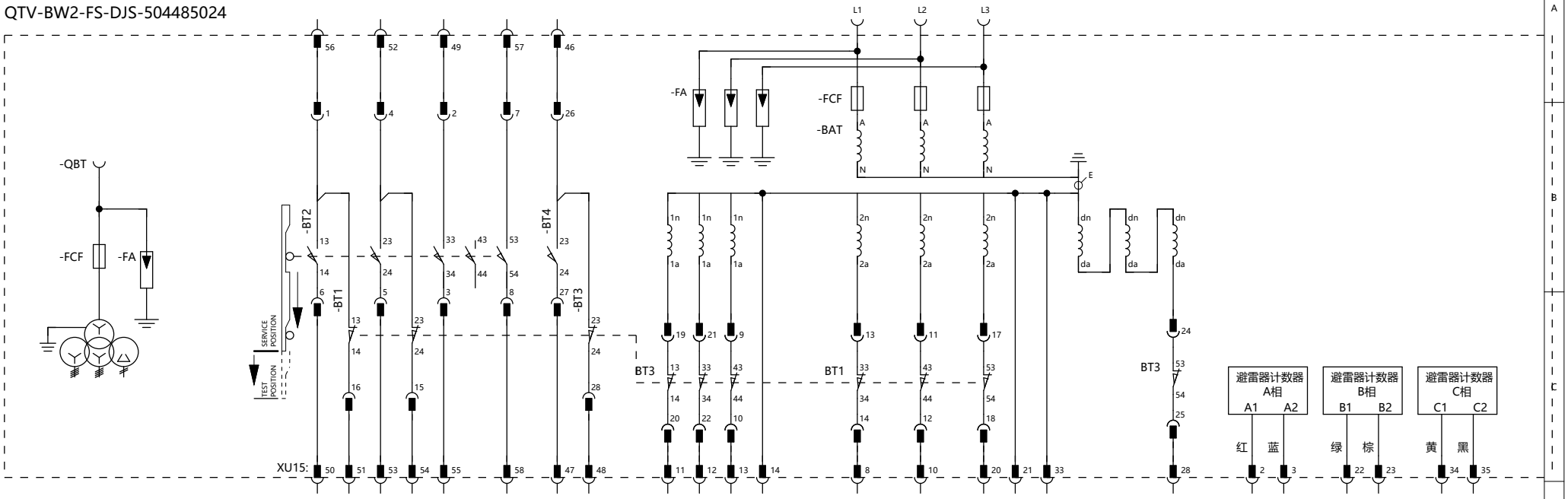

/4.2C /4.2C /3.2B /3.2B /4.2C /4.3C /4.3C /4.3C /5.1C /5.1C /5.1C /5.1C /5.5C /5.5C /5.5C /5.5C /5.7C /5.7C /6.7B /6.7B /6.8B /6.8B /6.8B /6.8B

此图所示状态为: 手车位于工作位置

名称	描述	备注
-BT1	限位开关(手车位于运行位置)	
-BT2	限位开关(手车位于试验位置)	
-XU15	58针的多功能插座	
-FA	避雷器	可选
-BT3	限位开关(手车位于运行位置)	
-BT4	限位开关(手车位于试验位置)	

名称	描述	备注
-FCF	高压熔断器	
-BAT	电压互感器	
E	接地线	安装

This drawing and information contained thereon is the property of ABB (XIAMEN) Switchgear CO. LTD. and shall not be used, reproduced for any purpose, or shown to third parties without the written consent of ABB (XIAMEN) Switchgear CO. LTD.

REV.	DESCRIPTION	REV. DATE

DRAWN	XINYU LIU	TITLE	PT车接线图
CHECKED	Jianjun-Wang		
APPROVED	Yongsheng.Li	CONTRACT NO.:	504485024
FIRST DATE	2025/4/28		

FUNCTION: PT柜

PROJECT: 天津渤化永利丁辛醇项目

= P1 | SHEET NO 8

SCALE 1:1 | TOTAL PAGES 9

DRAWING NO XZS1-48353-A01-P1-S

EARTHING TRUCK

-QTE

QTE-Y0

/3.3D

名称	描述	备注

名称	描述	备注
-X0	58针多功能插座	
-RL2	手车闭锁电磁铁	可选

This drawing and information contained thereon is the property of ABB (XIAMEN) Switchgear CO. LTD. and shall not be used, reproduced for any purpose ,or shown to third parties without the written consent of ABB (XIAMEN) Switchgear CO. LTD.

REV.	DESCRIPTION	REV. DATE

DRAWN	XINYU LIU	TITLE	接地手车接线图
CHECKED	Jianjun-Wang		
APPROVED	Yongsheng.Li	CONTRACT NO.:	504485024
FIRST DATE	2025/4/28		

FUNCTION: PT柜

PROJECT: 天津渤化永利丁辛醇项目

= P1 | SHEET NO 9

SCALE 1:1 | TOTAL PAGES 9

DRAWING NO XZS1-48353-A01-P1-S

设备清单(柜体)

序号	设备号	设备名称	物料号	数量	制造商	型号	设备参数
1	-BAD	电容分压装置	DIK-06-B06N1000C-1	3	/	B06N-1000C-1	Un=6kV
2	-EB2	加热器	EP-HEATER-100W	1	SANYANG	1FZEK833B	100W
3	-QBT	电压互感器手车	QTV-BW2-FS-DJS-504485024	1	ABB	QTV	3PT TR. IN CB Y-Y-Y-Delta With SAM of DJS
4	-QTE	接地手车	QTE-Y0	1	ABB	QTE	New Earthing Switch Truck With RL2(32/42) Without BT1/BT2
5	-SPQE1	辅助触点	EP-ESWTR-1NO4NC	1	DIANKONG	/	Aux. switch 1NO+4NC SCREW CONN. PIN TYPE/GCE7109399R0105

This drawing and information contained thereon is the property of ABB (XIAMEN) Switchgear CO. LTD. and shall not be used, reproduced for any purpose ,or shown to third parties without the written consent of ABB (XIAMEN) Switchgear CO. LTD.

REV.	DESCRIPTION	REV. DATE

DRAWN	XINYU LIU	TITLE	设备清单(柜体)
CHECKED	Jianjun-Wang		
APPROVED	Yongsheng.Li	CONTRACT NO.:	504485024
FIRST DATE	2025/4/28		

FUNCTION: PT柜

PROJECT: 天津渤化永利丁辛醇项目

= P1 | SHEET NO 1

SCALE 1:1 | TOTAL PAGES 4

DRAWING NO XZS1-48353-A01-P1-E

设备清单(低压室面板)

序号	设备号	设备名称	物料号	数量	制造商	型号	设备参数
1	-BR90	微机消谐装置	RLY-HYR-3A	1	保定华源	HYR-3A	Un=110~220V AC/DC;50Hz
2	-PFV1	强制型带电显示器	VIO-DXN-Q-A10-1	1	LEELEN	DXN-Q	DXN-Q 强制型带电显示器UGZS1 3KV/6KV/10kV，辅助电源：AC/DC 220/110V
3	-PFX1	手车位置指示	PIL-ADWZ25-B/2	1	LEELEN	ADWZ25-B/2	98-242V AC/DC,TRUCK POSITION
4	-PGV1	电压表	VM-SD-T72-6/100	1	HENGLI	SD-T72	RANGE:0-6KV,20%,6/0.1KV
5	-SAM	高灵敏避雷器放电计数器	SAK-DJSII-C-03	1	安徽通辰	DJS-II/C	Un=110~220DC/AC 3m/2m/2m
6	-SFS61	电压选择开关	SSJ-E04-3-404	1	JIANGYIN CHANGJIANG	LW38D-16YH102/3P-AX	

This drawing and information contained thereon is the property of ABB (XIAMEN) Switchgear CO. LTD. and shall not be used, reproduced for any purpose ,or shown to third parties without the written consent of ABB (XIAMEN) Switchgear CO. LTD.

REV.	DESCRIPTION	REV. DATE

DRAWN	XINYU LIU	TITLE	设备清单(低压室面板)
CHECKED	Jianjun-Wang		
APPROVED	Yongsheng.Li	CONTRACT NO.:	504485024
FIRST DATE	2025/4/28		

FUNCTION: PT柜

PROJECT: 天津渤化永利丁辛醇项目

= P1 | SHEET NO 2
SCALE 1:1 | TOTAL PAGES 4
DRAWING NO XZS1-48353-A01-P1-E

设备清单(低压室)

序号	设备号	设备名称	物料号	数量	制造商	型号	设备参数
1	-BGD1	微动开关	EP-LVMS	1	PEAKS	TS11-001-01	MECHANICAL LIFE TIME>1000000TIMES
2	-EA1	LED低压室照明灯	L-CL10-1C-W-AA	1	PEAKS	CL10-1C-W-AA	SUPPLY: AC198~242V; POWER: <4W
3	-FCM20	微型空气开关	MCBA-202M-C3DC;MBDA-S2C-H11R	1;1	ABB	S202M-C3DC;S2C-H11R	Un=440V DC,In=3A,2-POLE
4	-FCM60A	微型空气开关	MCBA-2010001R0014;MBDA-S2C-H11R	1;1	ABB	S201-C1;S2C-H11R	Un=230V AC,In=1A,1-POLE
5	-FCM60B	微型空气开关	MCBA-2010001R0014;MBDA-S2C-H11R	1;1	ABB	S201-C1;S2C-H11R	Un=230V AC,In=1A,1-POLE
6	-FCM60C	微型空气开关	MCBA-2010001R0014;MBDA-S2C-H11R	1;1	ABB	S201-C1;S2C-H11R	Un=230V AC,In=1A,1-POLE
7	-FCM61A	微型空气开关	MCBA-2010001R0014;MBDA-S2C-H11R	1;1	ABB	S201-C1;S2C-H11R	Un=230V AC,In=1A,1-POLE
8	-FCM61B	微型空气开关	MCBA-2010001R0014;MBDA-S2C-H11R	1;1	ABB	S201-C1;S2C-H11R	Un=230V AC,In=1A,1-POLE
9	-FCM61C	微型空气开关	MCBA-2010001R0014;MBDA-S2C-H11R	1;1	ABB	S201-C1;S2C-H11R	Un=230V AC,In=1A,1-POLE
10	-FCM90	微型空气开关	MCBA-2010001R0034;MBDA-S2C-H11R	1;1	ABB	S201-C3;S2C-H11R	Un=230V AC,In=3A,1-POLE
11	-KB2	中间继电器	RLY-KC640ER0404	1	ABB	KC6-40E	Uaux=110-125V DC,4NO CONTACTS

This drawing and information contained thereon is the property of ABB (XIAMEN) Switchgear CO. LTD. and shall not be used, reproduced for any purpose ,or shown to third parties without the written consent of ABB (XIAMEN) Switchgear CO. LTD.

REV.	DESCRIPTION	REV. DATE

DRAWN	XINYU LIU	TITLE	设备清单(低压室)
CHECKED	Jianjun-Wang		
APPROVED	Yongsheng.Li	CONTRACT NO.:	504485024
FIRST DATE	2025/4/28		

FUNCTION: PT柜

PROJECT: 天津渤化永利丁辛醇项目

= P1 | SHEET NO 3

SCALE 1:1 | TOTAL PAGES 4

DRAWING NO XZS1-48353-A01-P1-E

设备清单(小车内部)

序号	设备号	设备名称	物料号	数量	制造商	型号	设备参数
1	-BAT1	电压互感器	VTS-G06111-GG8221	1	ABB	JDZX23-10	6/v3 0.1/v3 0.1/v3 0.1/3kV;40VA/CL 0.5;40VA/CL 0.5
2	-BAT2	电压互感器	VTS-G06111-GG8221	1	ABB	JDZX23-10	6/v3 0.1/v3 0.1/v3 0.1/3kV;40VA/CL 0.5;40VA/CL 0.5
3	-BAT3	电压互感器	VTS-G06111-GG8221	1	ABB	JDZX23-10	6/v3 0.1/v3 0.1/v3 0.1/3kV;40VA/CL 0.5;40VA/CL 0.5
4	-FA	避雷器	SAS-YH5WZ6-10/27-3	3	SHENGDIAN	YH5WZ6-10/27	额定电压:10KV,持续运行电压:8KV,雷电冲击残压:27KV(8/20us 5kA),标称放电电流:5KA,2ms方波通流容量:400A
5	-FCF	高压熔断器	FLX-1200020I194N	3	XIRONG	XRNP-12/2-50-1	12kV,In=2A,Ia=50kA,E=194mm,D=25mm

This drawing and information contained thereon is the property of ABB (XIAMEN) Switchgear CO. LTD. and shall not be used, reproduced for any purpose ,or shown to third parties without the written consent of ABB (XIAMEN) Switchgear CO. LTD.

REV.	DESCRIPTION	REV. DATE

DRAWN	XINYU LIU	TITLE	设备清单(小车内部)
CHECKED	Jianjun-Wang		
APPROVED	Yongsheng.Li	CONTRACT NO.:	504485024
FIRST DATE	2025/4/28		

FUNCTION: PT柜

PROJECT: 天津渤化永利丁辛醇项目

= P1 | SHEET NO 4

SCALE 1:1 | TOTAL PAGES 4

DRAWING NO XZS1-48353-A01-P1-E

REV.	DESCRIPTION	REV. DATE

This drawing and information contained thereon is the property of ABB (XIAMEN) Switchgear CO. LTD. and shall not be used, reproduced for any purpose ,or shown to third parties without the written consent of ABB (XIAMEN) Switchgear CO. LTD.

==A01=P1+-X2

备注	外引电缆	设备	线号	端子号	型号	线号	设备	外引电缆	备注
		-FCM20:4		● 1	NEK4		-QBT:52		
	△	=I1-X5:40		● 2	NEK4				
				● 3	NEK4		-SAM:P2/01		
				● 4	NEK4		-BR90:10		
				● 5	NEK4		-PFV1:220V		
		-FCM20:2		● 6	NEK4		-KB2:A2		
				● 7	NEK4		-PFX1:1		
				● 8	NEK4		-QTE:42		
				● 9	NEK4		-SAM:P2/03		
				● 10	NEK4		-BR90:9		
				● 11	NEK4		-PFV1:0V		
				● 12	NEK4		-KB2:A1		
		-QBT:54		● 13	NEK4		-PFX1:3		
		-QBT:53		× 14	NEK4		-PFX1:2		
	△	=I1-X5:41		15	NEK4		=B1-X5:30	△	
							=B1-X5:32	△	
	△	=B1-X5:31		16	NEK4		-PFV1:NO		
	△	=B1-X5:33							
		-PFV1:COM		17	NEK4		-QTE:32		

☆ 柜间小母线,随柜提供

△ 柜间控制电路(由客户自备)

短接排

× 分隔板

(测试短接片

O 其他

DRAWN	XINYU LIU
CHECKED	Jianjun-Wang
APPROVED	Yongsheng.Li
FIRST DATE	2025/4/28
REV. DATE	
REV.	
DESCRIPTION	

TITLE: 端子图表 ==A01=P1+-X2

CONTRACT NO.: 504485024

FUNCTION: PT柜

PROJECT: 天津渤化永利丁辛醇项目

=	P1
SCALE	1:1
DRAWING NO.	XZS1-48353-A01-P1-T
SHEET NO.	1
TOTAL PAGES	7

REV.	DESCRIPTION	REV. DATE

This drawing and information contained thereon is the property of ABB (XIAMEN) Switchgear CO. LTD. and shall not be used, reproduced for any purpose ,or shown to third parties without the written consent of ABB (XIAMEN) Switchgear CO. LTD.

==A01=P1+-X5

备注	外引电缆	设备	线号	端子号	型号	线号	设备	外引电缆	备注
	△	=D1-X2:6		1	NEK4		-KB2:33		
	△	=D1-X2:11							
	△	=D1-X2:30		2	NEK4		-KB2:34		
	△	=D1-X2:36							
				3	NEK4		-KB2:23		
				4	NEK4		-KB2:24		
				5	NEK4		-QBT:51		
				6	NEK4		-QBT:56		
				7	NEK4		-QBT:50		
				8	NEK4		-QBT:49		
				9	NEK4		-QBT:55		
				10	NEK4		-QBT:57		
				11	NEK4		-QBT:58		
	△	-公用测控		12	NEK4		-QBT:48		
	△	-公用测控		13	NEK4		-QBT:46		
	△	-公用测控		14	NEK4		-QBT:47		
	△	=B1-X3:10		15	NEK4		-SPQE1:20		
	△	=B1-X3:53							
	△	=B1-X3:53		16	NEK4		-SPQE1:21		
	△	=B1-X3:54							
	△	=I1-X3:40		17	NEK4		-SPQE1:22		
	△	=I1-X3:41		18	NEK4		-SPQE1:23		
				19	NEK4		-SPQE1:24		
				20	NEK4		-SPQE1:25		
				21	NEK4		-SPQE1:26		
				22	NEK4		-SPQE1:27		
	△	-公用测控		23	NEK4		-SPQE1:40		
	△	-公用测控		24	NEK4		-SPQE1:41		
				25	NEK4		-SAM:P1/03		
				26	NEK4		-SAM:P1/04		
				27	NEK4		-BR90:5		
				28	NEK4		-BR90:1		
				29	NEK4		-BR90:2		
				30	NEK4		-BR90:3		
				31	NEK4		-BR90:4		
				32	NEK4		-FCM90:11		
		-FCM20:11		33	RCT4SW		-FCM90:11		
				34	NEK4		-FCM61C:12		
				35	NEK4				
				36	NEK4				
				37	NEK4				
				38	NEK4				
				39	NEK4				
				40	NEK4				
				41	NEK4				
				42	NEK4				
				43	NEK4				
				44	NEK4				

☆ 柜间小母线,随柜提供

△ 柜间控制电路(由客户自备)

短接排

✕ 分隔板

(测试短接片

O 其他

DRAWN	XINYU LIU
CHECKED	Jianjun-Wang
APPROVED	Yongsheng.Li
FIRST DATE	2025/4/28
REV. DATE	
REV.	
DESCRIPTION	

TITLE: 端子图表 ==A01=P1+-X5

CONTRACT NO.: 504485024

FUNCTION: PT柜

PROJECT: 天津渤化永利丁辛醇项目

=	P1
SCALE	1:1
DRAWING NO.	XZS1-48353-A01-P1-T
SHEET NO.	2
TOTAL PAGES	7

REV.	DESCRIPTION	REV. DATE

This drawing and information contained thereon is the property of ABB (XIAMEN) Switchgear CO. LTD. and shall not be used, reproduced for any purpose ,or shown to third parties without the written consent of ABB (XIAMEN) Switchgear CO. LTD.

==A01=P1+-X6

备注	外引电缆	设备	线号	端子号	型号	线号	设备	外引电缆	备注
		-FCM61A:1		1	NEK4		-QBT:11		
				2	NEK4		-FCM61A:2		
				3	NEK4				
				4	NEK4		-X13:7		
		-FCM61B:1		5	NEK4		-QBT:12		
				6	NEK4		-FCM61B:2		
				7	NEK4				
				8	NEK4		-X13:8		
		-FCM61C:1		9	NEK4		-QBT:13		
				10	NEK4		-FCM61C:2		
				11	NEK4				
				12	NEK4		-X13:9		
				13	NEK4		-QBT:14		
				14	NEK4				
				15	NEK4				
				16	NEK4		-X13:10		
	△	-公用测控		17	NEK4		-X13:1		
				18	NEK4				
				19	NEK4				
		-SFS61:10		20	NEK4		-FCM60A:2		
				21	NEK4				
	△	-公用测控		22	NEK4		-X13:2		
				23	NEK4				
				24	NEK4				
		-SFS61:6		25	NEK4		-FCM60B:2		
				26	NEK4				
	△	-公用测控		27	NEK4		-X13:3		
				28	NEK4				
				29	NEK4				
		-SFS61:2		30	NEK4		-FCM60C:2		
				31	NEK4				
	△	-公用测控		32	NEK4		-X13:4		
				33	NEK4				
				34	NEK4				
				35	NEK4		-QBT:21		
				36	NEK4		-SFS61:12		
	△	-公用测控		37	NEK4		-X13:5		
				38	NEK4				
				39	NEK4				
				40	NEK4		-KB2:44		
		-FCM60A:1		41	NEK4		-QBT:8		
		-FCM60B:1		42	NEK4		-QBT:10		
		-FCM60C:1		43	NEK4		-QBT:20		
				44	NEK4		-QBT:33		
				45	NEK4		-BR90:7		
				46	NEK4				
				47	NEK4		-QBT:28		
		-BR90:6		48	NEK4		-KB2:43		

☆ 柜间小母线,随柜提供

△ 柜间控制电路(由客户自备)

短接排

分隔板

(测试短接片

O 其他

DRAWN	XINYU LIU
CHECKED	Jianjun-Wang
APPROVED	Yongsheng.Li
FIRST DATE	2025/4/28
REV. DATE	
REV.	
DESCRIPTION	

TITLE: 端子图表 ==A01=P1+-X6

CONTRACT NO.: 504485024

FUNCTION: PT柜

PROJECT: 天津渤化永利丁辛醇项目

=	P1
SCALE	1:1
SHEET NO.	3
TOTAL PAGES	7

DRAWING NO. XZS1-48353-A01-P1-T

REV.	DESCRIPTION	REV. DATE

This drawing and information contained thereon is the property of ABB (XIAMEN) Switchgear CO. LTD. and shall not be used, reproduced for any purpose ,or shown to third parties without the written consent of ABB (XIAMEN) Switchgear CO. LTD.

==A01=P1+-X9

备注	外引电缆	设备	线号	端子号	型号	线号	设备	外引电缆	备注
				1	NEK4		-EB2:1		
		-FCM90:2		2	NEK4		-BGD1:1		
				3	NEK4		-EB2:2		
		-X11:4		4	NEK4		-EA1:A2		
		-EA1:A1		5	RCT4SW		-BGD1:2		

☆ 柜间小母线,随柜提供

△ 柜间控制电路(由客户自备)

短接排

分隔板

(测试短接片

O 其他

REV.	DESCRIPTION	REV. DATE		
			DRAWN	XINYU LIU
			CHECKED	Jianjun-Wang
			APPROVED	Yongsheng.Li
			FIRST DATE	2025/4/28

TITLE 端子图表 ==A01=P1+-X9

CONTRACT NO.: 504485024

FUNCTION PT柜

PROJECT 天津渤化永利丁辛醇项目

= P1

SCALE 1:1

SHEET NO. 4

TOTAL PAGES 7

DRAWING NO. XZS1-48353-A01-P1-T

REV.	DESCRIPTION	REV. DATE

This drawing and information contained thereon is the property of ABB (XIAMEN) Switchgear CO. LTD. and shall not be used, reproduced for any purpose ,or shown to third parties without the written consent of ABB (XIAMEN) Switchgear CO. LTD.

==A01=P1+-X11

备注	外引电缆	设备	线号	端子号	型号	线号	设备	外引电缆	备注
6黑色	☆	-X11.2:1		1	A3C 6		-FCM90:1		
6黑色	☆	-X11.1:1							
6黑色	☆	-X11.2:2		2	A3C 6				
6黑色	☆	-X11.1:2							
6黑色	☆	-X11.2:3		3	A3C 6				
6黑色	☆	-X11.1:3							
6黑色	☆	-X11.2:4		4	A3C 6		-X9:4		
6黑色	☆	-X11.1:4							
6黑色	☆	-X11.2:5		5	A3C 6				
6黑色	☆	-X11.1:5							
6黑色	☆	-X11.2:6		6	A3C 6				
6黑色	☆	-X11.1:6							
6黑色	☆	-X11.2:7		7	A3C 6		-FCM20:3		
6黑色	☆	-X11.1:7							
6黑色	☆	-X11.2:8		8	A3C 6		-FCM20:1		
6黑色	☆	-X11.1:8							

☆ 柜间小母线,随柜提供

△ 柜间控制电路(由客户自备)

短接排

分隔板

(测试短接片

O 其他

DRAWN	XINYU LIU
CHECKED	Jianjun-Wang
APPROVED	Yongsheng.Li
FIRST DATE	2025/4/28
REV. DATE	
REV.	
DESCRIPTION	

TITLE: 端子图表 ==A01=P1+-X11

CONTRACT NO.: 504485024

FUNCTION: PT柜

PROJECT: 天津渤化永利丁辛醇项目

=	P1
SCALE	1:1
DRAWING NO.	XZS1-48353-A01-P1-T
SHEET NO.	5
TOTAL PAGES	7

REV.	DESCRIPTION	REV. DATE

This drawing and information contained thereon is the property of ABB (XIAMEN) Switchgear CO. LTD. and shall not be used, reproduced for any purpose ,or shown to third parties without the written consent of ABB (XIAMEN) Switchgear CO. LTD.

==A01=P1+-X13

备注	外引电缆	设备	线号	端子号	型号	线号	设备	外引电缆	备注
	☆	-X13.1:1		1	A4C 4		-X6:17		
	☆	-X13.2:1							
	☆	-X13.1:2		2	A4C 4		-X6:22		
	☆	-X13.2:2							
	☆	-X13.1:3		3	A4C 4		-X6:27		
	☆	-X13.2:3							
	☆	-X13.1:4		4	A4C 4		-X6:32		
	☆	-X13.2:4							
	☆	-X13.1:5		5	A4C 4		-X6:37		
	☆	-X13.2:5							
	☆	-X13.1:6		6	A4C 4				
	☆	-X13.2:6							
	☆	-X13.3:7		7	A4C 4		-X6:4		
	☆	-X13.4:7							
	☆	-X13.3:8		8	A4C 4		-X6:8		
	☆	-X13.4:8							
	☆	-X13.3:9		9	A4C 4		-X6:12		
	☆	-X13.4:9							
	☆	-X13.3:10		10	A4C 4		-X6:16		
	☆	-X13.4:10							

☆ 柜间小母线,随柜提供

△ 柜间控制电路(由客户自备)

短接排

分隔板

(测试短接片

O 其他

DRAWN	XINYU LIU	TITLE
CHECKED	Jianjun-Wang	端子图表 ==A01=P1+-X13
APPROVED	Yongsheng.Li	CONTRACT NO.:
FIRST DATE	2025/4/28	504485024
REV. DATE		
REV.		
DESCRIPTION		

FUNCTION: PT柜

PROJECT: 天津渤化永利丁辛醇项目

=	P1
SCALE	1:1
DRAWING NO.	XZS1-48353-A01-P1-T
SHEET NO.	6
TOTAL PAGES	7

REV.	DESCRIPTION	REV. DATE

This drawing and information contained thereon is the property of ABB (XIAMEN) Switchgear CO. LTD. and shall not be used, reproduced for any purpose ,or shown to third parties without the written consent of ABB (XIAMEN) Switchgear CO. LTD.

==A01=P1+-X14

备注	外引电缆	设备	线号	端子号	型号	线号	设备	外引电缆	备注
	☆	-X14:2		1	NEK4				
	☆	-X14:1		2	NEK4				
	☆	-X14:4		3	NEK4				
	☆	-X14:3		4	NEK4				
	☆	-X14:6		5	NEK4				
	☆	-X14:5		6	NEK4				
	☆	-X14:8		7	NEK4				
	☆	-X14:7		8	NEK4				
	☆	-X14:10		9	NEK4				
	☆	-X14:9		10	NEK4				
	☆	-X14:12		11	NEK4				
	☆	-X14:11		12	NEK4				
				13	NEK4		-SAM:P1/01		
				14	NEK4		-SAM:P1/02		
				15	NEK4		-BR90:12		
				16	NEK4		-BR90:11		

☆ 柜间小母线,随柜提供

△ 柜间控制电路(由客户自备)

短接排

分隔板

(测试短接片

O 其他

DRAWN	XINYU LIU	TITLE
CHECKED	Jianjun-Wang	端子图表 ==A01=P1+-X14
APPROVED	Yongsheng.Li	CONTRACT NO.:
FIRST DATE	2025/4/28	504485024
REV. DATE		
DESCRIPTION		

FUNCTION: PT柜

PROJECT: 天津渤化永利丁辛醇项目

=	P1	SHEET NO. 7
SCALE	1:1	TOTAL PAGES 7
DRAWING NO.	XZS1-48353-A01-P1-T	

单线图

一次设备索引			
设备号	设备名称	数量	物料号
-QAB	真空断路器	1	VD4/P-77
-BCT1	电流互感器	1	CTA-G1K313-0474
-BCT2	电流互感器	1	CTA-G1K313-0474
-BCT3	电流互感器	1	CTA-G1K313-0474
-BAD	电容分压装置	3	DIK-06-B06N1000C-1
-QCE	接地开关	1	ET1-BGE2/3
-FA	避雷器	3	SAS-YH5WZ-10/27-1
-BCN	零序电流互感器	1	CTZ-GLMZ2150501-A1

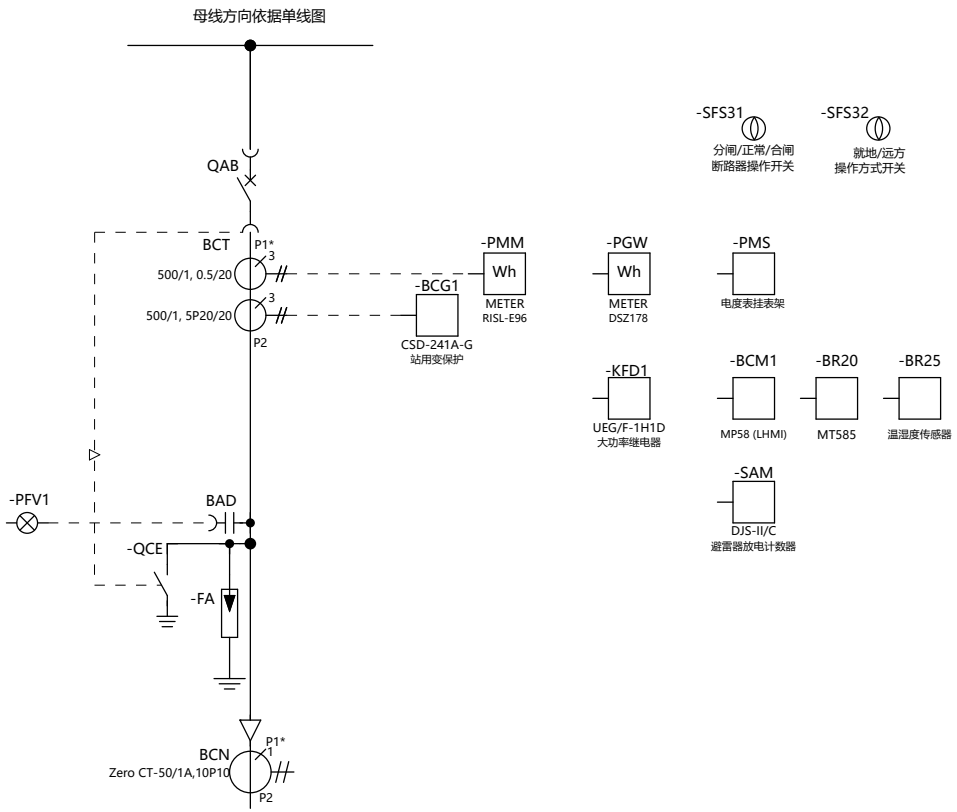

This drawing and information contained thereon is the property of ABB (XIAMEN) Switchgear CO. LTD. and shall not be used, reproduced for any purpose ,or shown to third parties without the written consent of ABB (XIAMEN) Switchgear CO. LTD.

REV.	DESCRIPTION	REV. DATE

DRAWN	XINYU LIU	TITLE	单线图
CHECKED	Jianjun-Wang		
APPROVED	Yongsheng.Li	CONTRACT NO.:	504485024
FIRST DATE	2025/4/28		

FUNCTION: 动力变压器柜

PROJECT: 天津渤化永利丁辛醇项目

= FT1 | SCALE 1:1 | SHEET NO 1 | TOTAL PAGES 13

DRAWING NO XZS1-48353-A01-FT1-S

断路器弹簧储能电机回路	控制回路	保护与信号回路	加热器回路 电缆室 100W	电缆室照明	低压室照明

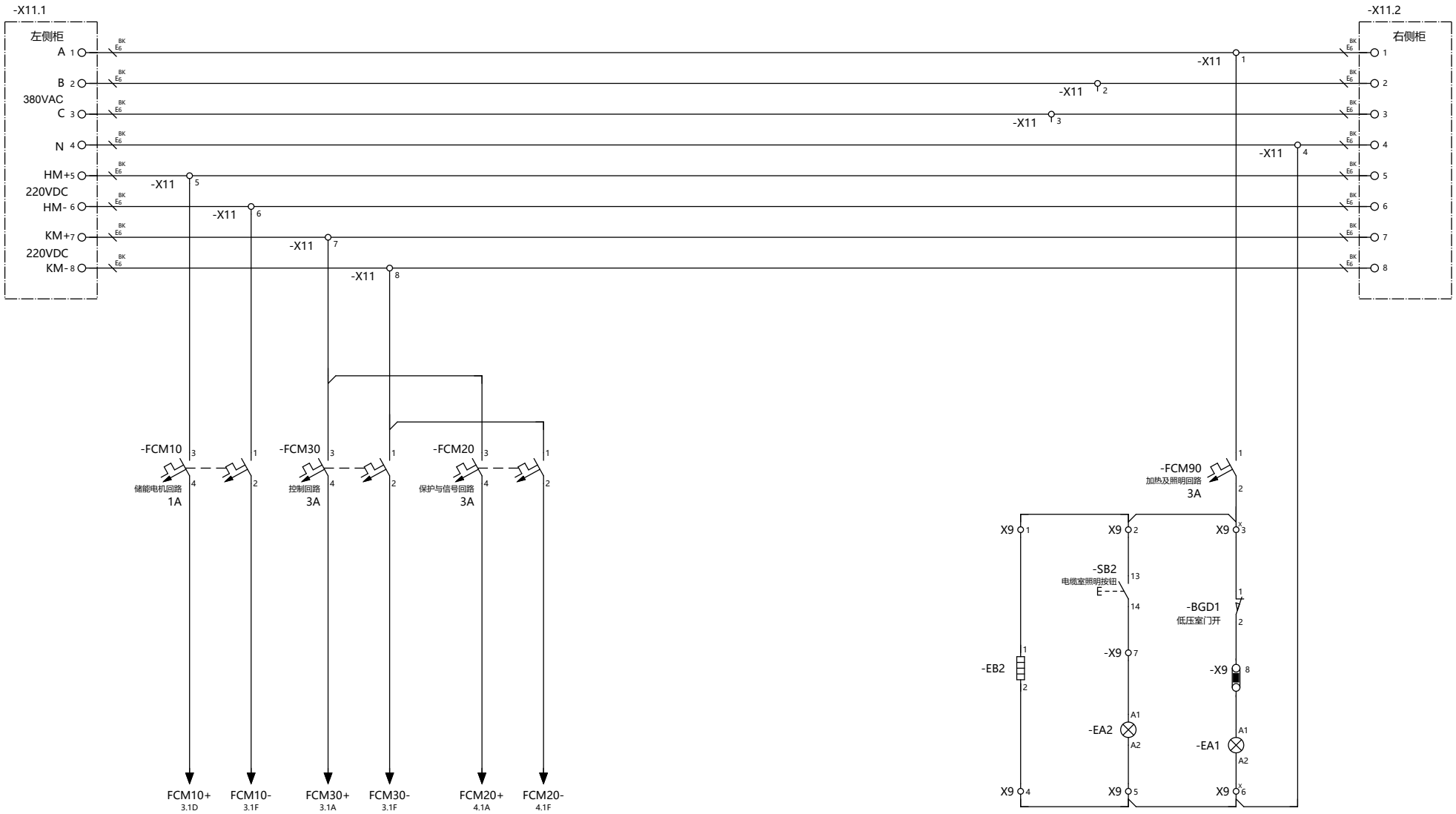

This drawing and information contained thereon is the property of ABB (XIAMEN) Switchgear CO. LTD. and shall not be used, reproduced for any purpose ,or shown to third parties without the written consent of ABB (XIAMEN) Switchgear CO. LTD.

REV.	DESCRIPTION	REV. DATE

DRAWN	XINYU LIU	TITLE	电源小母线回路
CHECKED	Jianjun-Wang		
APPROVED	Yongsheng.Li	CONTRACT NO.:	504485024
FIRST DATE	2025/4/28		

ABB

FUNCTION	动力变压器柜
PROJECT	天津渤化永利丁辛醇项目

=	FT1	SHEET NO	2
SCALE	1:1	TOTAL PAGES	13
DRAWING NO	XZS1-48353-A01-FT1-S		

断路器弹簧储能电机	已储能指示灯	断路器合闸回路				断路器分闸回路						保护操作电源	带电显示及其闭锁回路
		合闸闭锁	备用	就地合闸	远方合闸	远方分闸	就地分闸	永跳	压力闭锁	保护跳闸	备用		

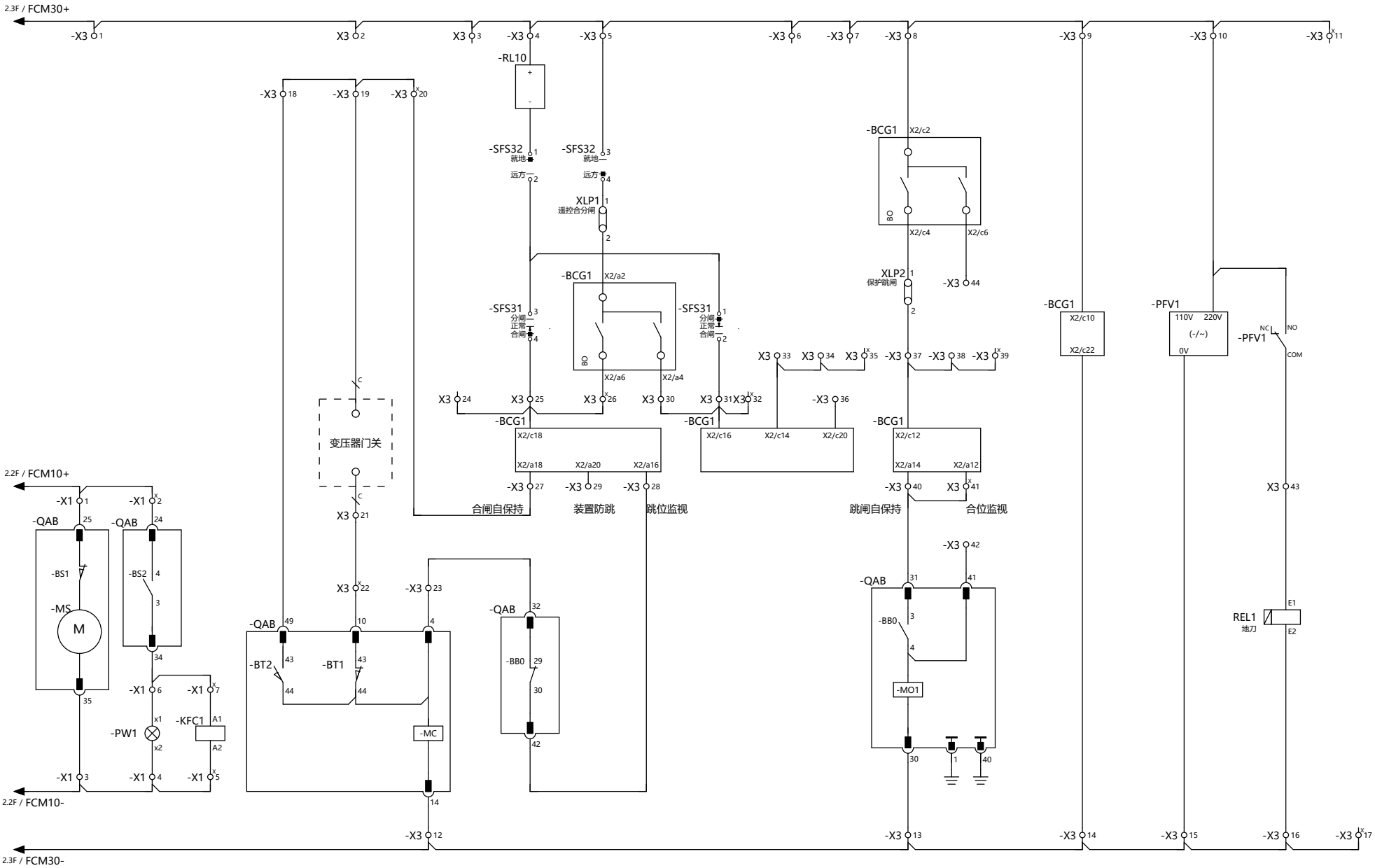

This drawing and information contained thereon is the property of ABB (XIAMEN) Switchgear CO. LTD. and shall not be used, reproduced for any purpose, or shown to third parties without the written consent of ABB (XIAMEN) Switchgear CO. LTD.

REV.	DESCRIPTION	REV. DATE

DRAWN	XINYU LIU	TITLE	控制回路
CHECKED	Jianjun-Wang		
APPROVED	Yongsheng.Li	CONTRACT NO.:	504485024
FIRST DATE	2025/4/28		

ABB

FUNCTION	动力变压器柜
PROJECT	天津渤化永利丁辛醇项目

= FT1	SHEET NO 3
SCALE 1:1	TOTAL PAGES 13
DRAWING NO	XZS1-48353-A01-FT1-S

断路器状态		断路器手车位置		接地开关状态		MT585电源	多功能表电源	电度表电源	避雷器计数器电源	保护装置辅助电源
合闸	分闸	工作	试验	合闸	分闸					

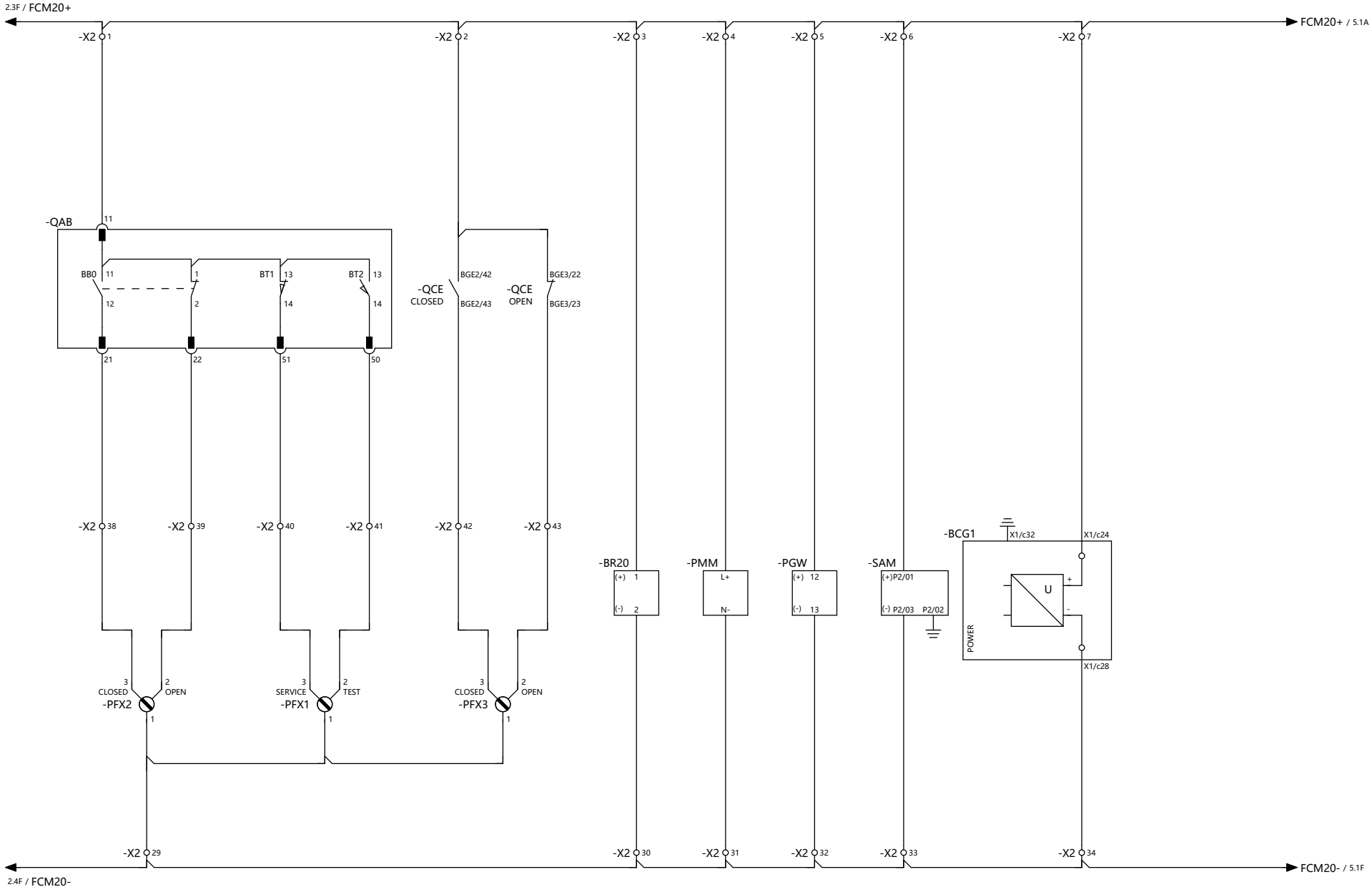

This drawing and information contained thereon is the property of ABB (XIAMEN) Switchgear CO. LTD. and shall not be used, reproduced for any purpose ,or shown to third parties without the written consent of ABB (XIAMEN) Switchgear CO. LTD.

REV.	DESCRIPTION	REV. DATE

DRAWN	XINYU LIU	TITLE	保护与信号回路
CHECKED	Jianjun-Wang		
APPROVED	Yongsheng.Li	CONTRACT NO.:	504485024
FIRST DATE	2025/4/28		

ABB

FUNCTION	动力变压器柜
PROJECT	天津渤化永利丁辛醇项目

=	FT1	SHEET NO	4
SCALE	1:1	TOTAL PAGES	13
DRAWING NO	XZS1-48353-A01-FT1-S		

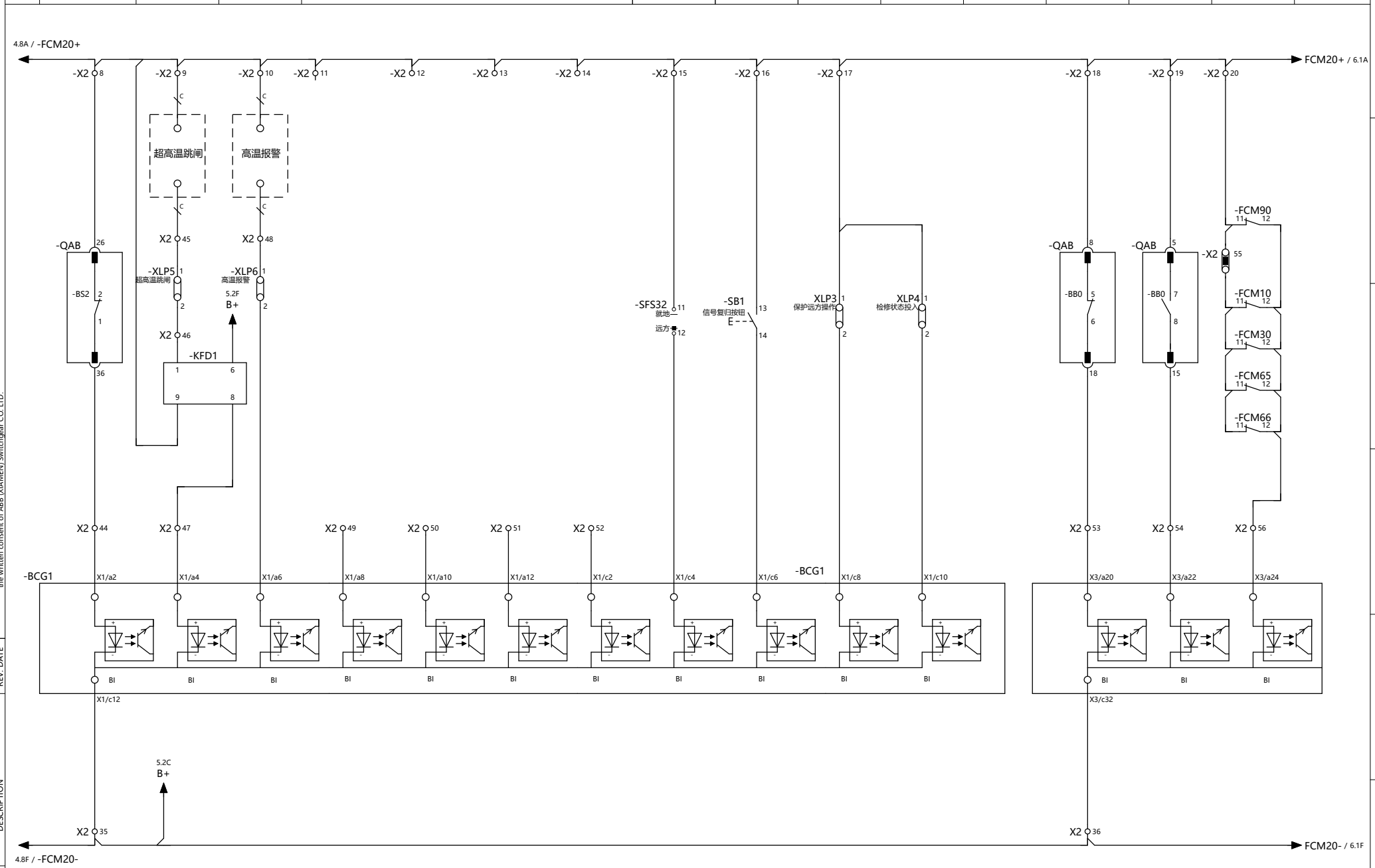

This drawing and information contained thereon is the property of ABB (XIAMEN) Switchgear CO. LTD. and shall not be used, reproduced for any purpose ,or shown to third parties without the written consent of ABB (XIAMEN) Switchgear CO. LTD.

REV.	DESCRIPTION	REV. DATE

DRAWN	XINYU LIU	TITLE	保护与信号回路
CHECKED	Jianjun-Wang		
APPROVED	Yongsheng.Li	CONTRACT NO.:	504485024
FIRST DATE	2025/4/28		

ABB

FUNCTION	动力变压器柜
PROJECT	天津渤化永利丁辛醇项目

=	FT1	SHEET NO	5
SCALE	1:1	TOTAL PAGES	13
DRAWING NO	XZS1-48353-A01-FT1-S		

断路器手车位置		接地开关状态		邻柜继保装置故障	备用	温控器故障	变压器门开	备用
工作	试验	合闸	分闸					

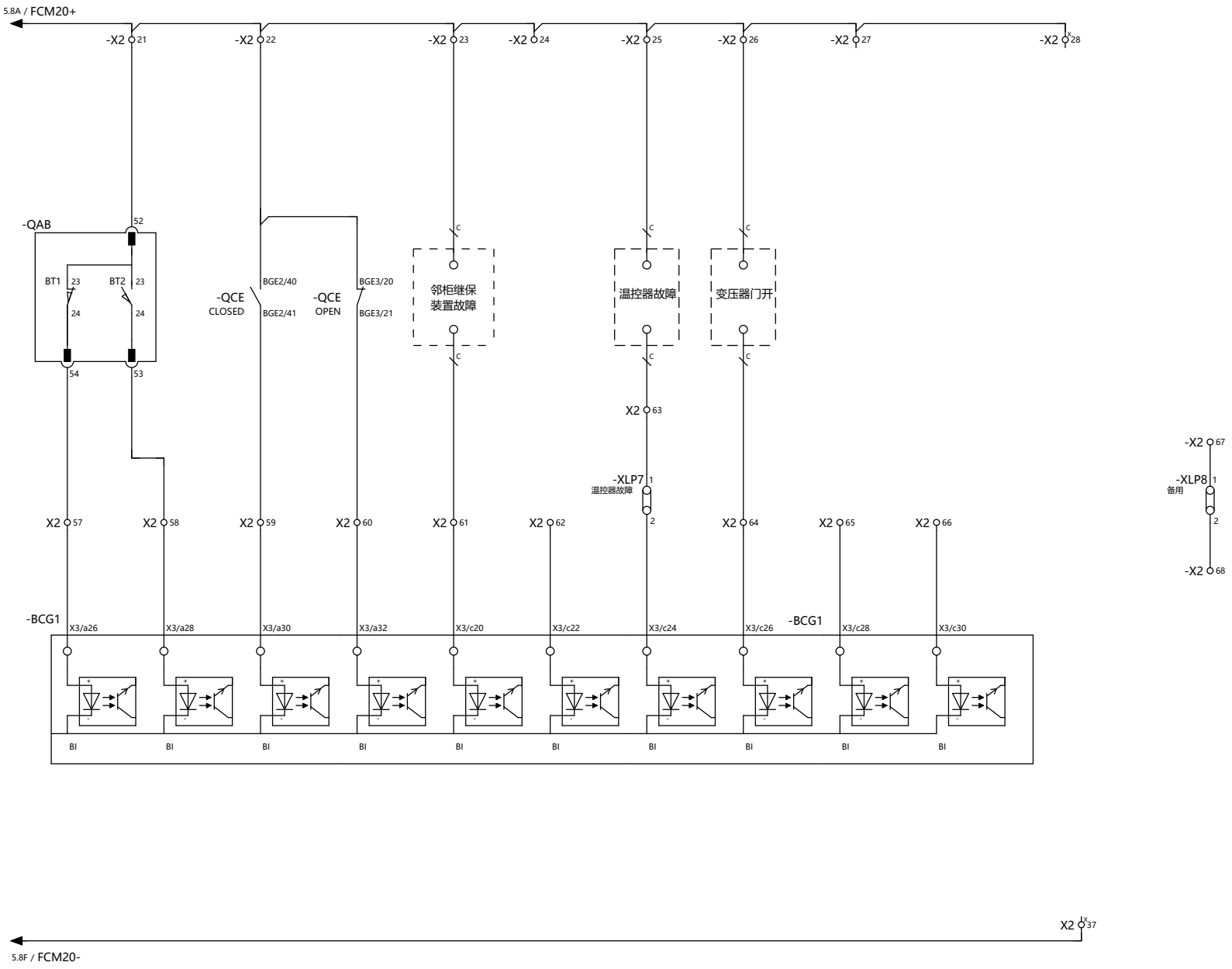

This drawing and information contained thereon is the property of ABB (XIAMEN) Switchgear CO. LTD. and shall not be used, reproduced for any purpose ,or shown to third parties without the written consent of ABB (XIAMEN) Switchgear CO. LTD.

REV.	DESCRIPTION	REV. DATE

DRAWN	XINYU LIU	TITLE	保护与信号回路
CHECKED	Jianjun-Wang		
APPROVED	Yongsheng.Li	CONTRACT NO.:	504485024
FIRST DATE	2025/4/28		

FUNCTION: 动力变压器柜

PROJECT: 天津渤化永利丁辛醇项目

= FT1 | SCALE 1:1 | SHEET NO 6 | TOTAL PAGES 13

DRAWING NO XZS1-48353-A01-FT1-S

断路器已储能	断路器状态		断路器手车位置		接地开关状态		就地/远方选择开关位置	
	合闸	分闸	工作	试验	合闸	分闸	就地	远方

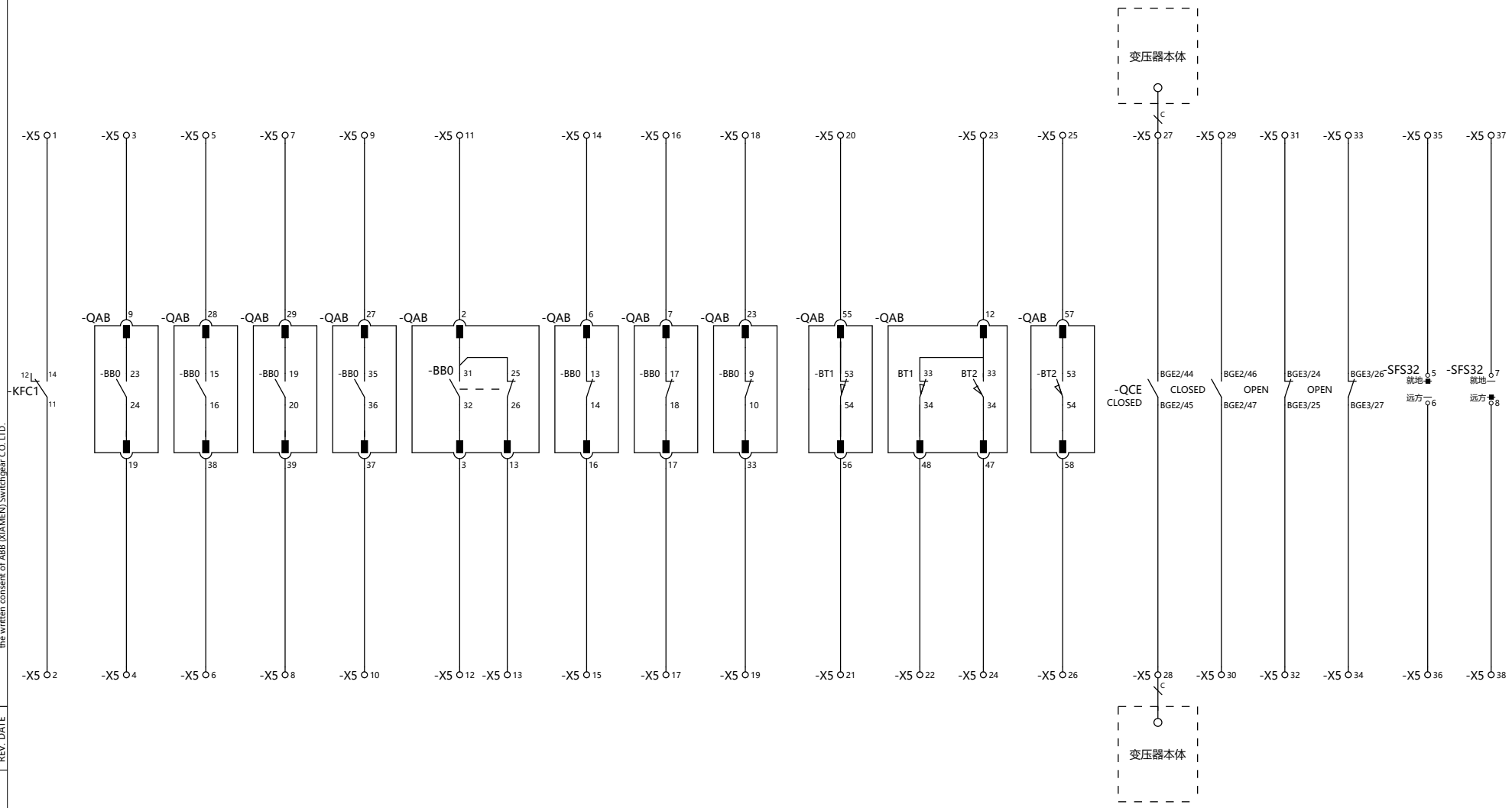

This drawing and information contained thereon is the property of ABB (XIAMEN) Switchgear CO. LTD. and shall not be used, reproduced for any purpose, or shown to third parties without the written consent of ABB (XIAMEN) Switchgear CO. LTD.

REV.	DESCRIPTION	REV. DATE

DRAWN	XINYU LIU	TITLE	备用回路
CHECKED	Jianjun-Wang		
APPROVED	Yongsheng.Li	CONTRACT NO.:	504485024
FIRST DATE	2025/4/28		

ABB

FUNCTION	动力变压器柜
PROJECT	天津渤化永利丁辛醇项目

=	FT1	SHEET NO	7
SCALE	1:1	TOTAL PAGES	13
DRAWING NO	XZS1-48353-A01-FT1-S		

保护空开信号	避雷器计数器报警信号	跳低压侧断路器-1	跳低侧分段-1	闭低侧分段-1	事故总信号	控制回路断线	非保持信号			
							备用	保护动作	运行异常告警	装置故障告警

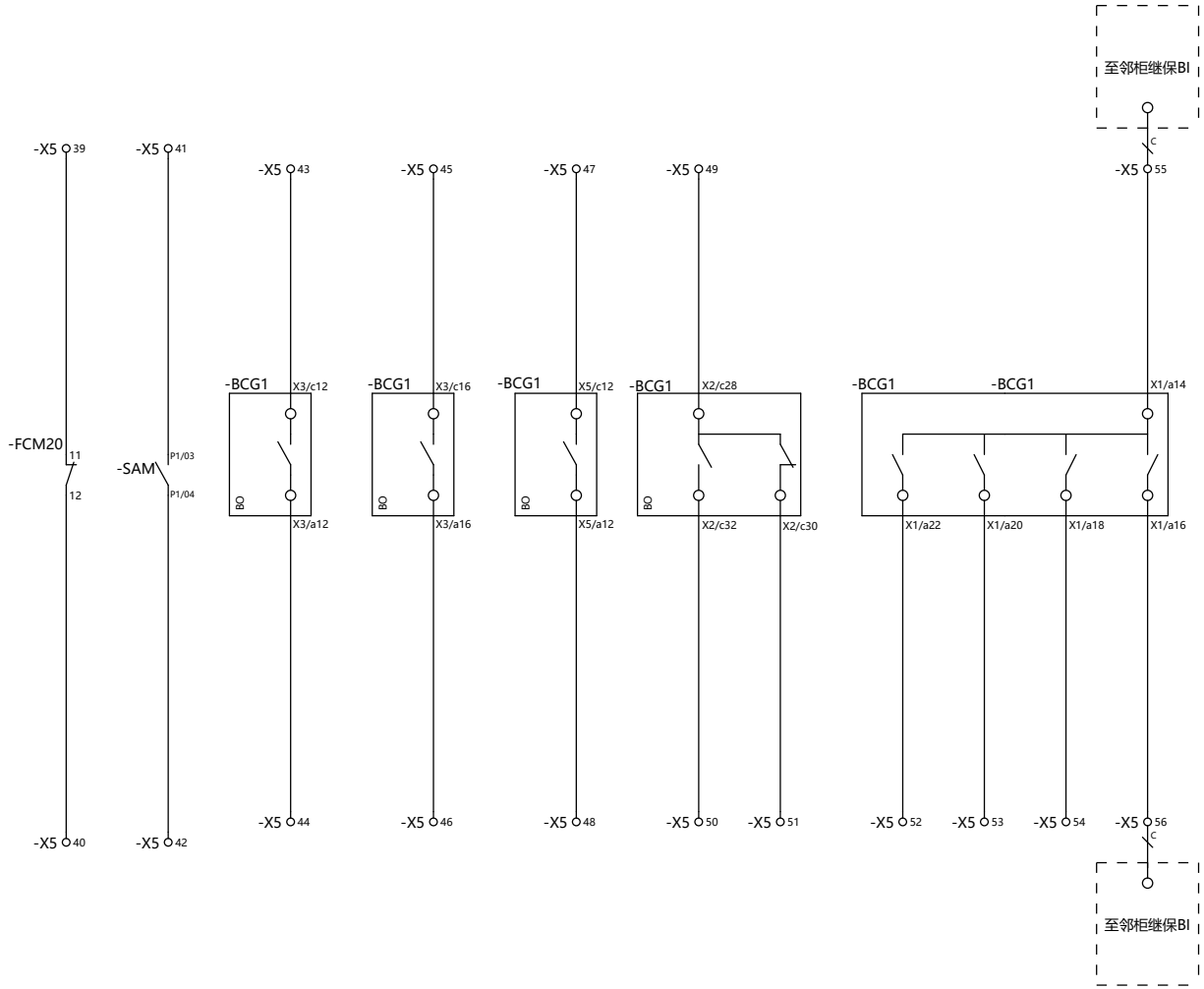

-X5 61 -X5 62 -X5 63 -X5 64 -X5 65

-X5 66 -X5 67 -X5 68 -X5 69 -X5 70

This drawing and information contained thereon is the property of ABB (XIAMEN) Switchgear CO. LTD. and shall not be used, reproduced for any purpose ,or shown to third parties without the written consent of ABB (XIAMEN) Switchgear CO. LTD.

REV.	DESCRIPTION	REV. DATE

DRAWN	XINYU LIU	TITLE	备用回路
CHECKED	Jianjun-Wang		
APPROVED	Yongsheng.Li	CONTRACT NO.:	504485024
FIRST DATE	2025/4/28		

ABB

FUNCTION	动力变压器柜
PROJECT	天津渤化永利丁辛醇项目

=	FT1	SHEET NO	8
SCALE	1:1	TOTAL PAGES	13
DRAWING NO	XZS1-48353-A01-FT1-S		

通讯小母线	保护对时口	避雷器计数器通讯	多功能表485通讯

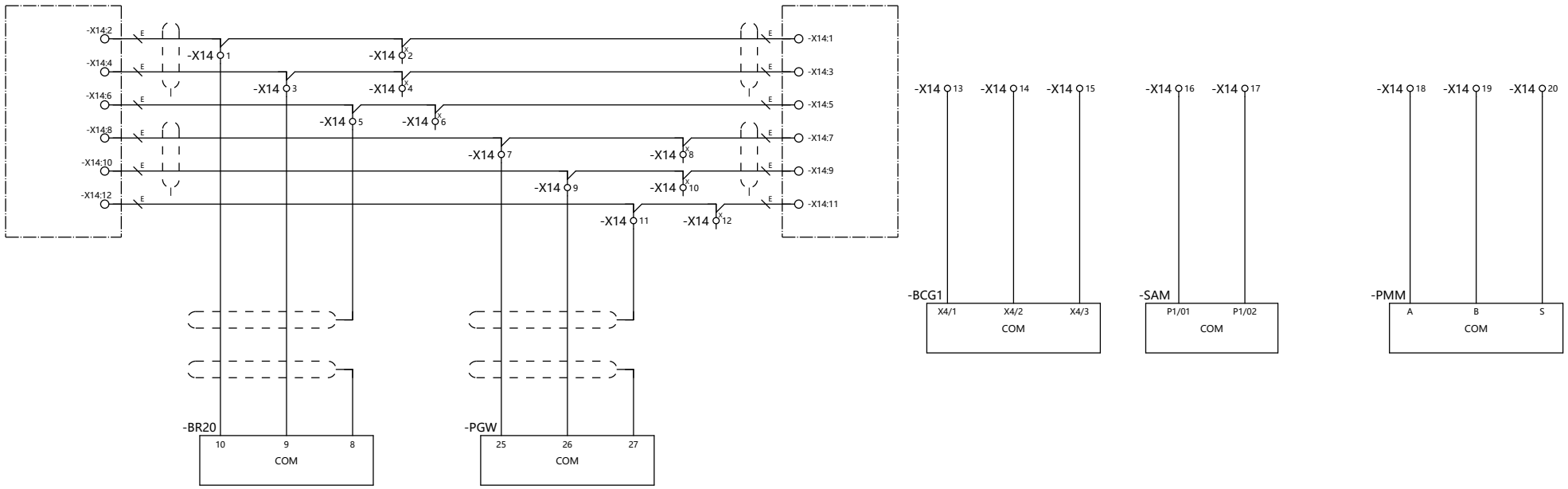

This drawing and information contained thereon is the property of ABB (XIAMEN) Switchgear CO. LTD. and shall not be used, reproduced for any purpose ,or shown to third parties without the written consent of ABB (XIAMEN) Switchgear CO. LTD.

REV.	DESCRIPTION	REV. DATE

DRAWN	XINYU LIU	TITLE	通信回路
CHECKED	Jianjun-Wang		
APPROVED	Yongsheng.Li	CONTRACT NO.:	504485024
FIRST DATE	2025/4/28		

FUNCTION	动力变压器柜
PROJECT	天津渤化永利丁辛醇项目

=	FT1	SHEET NO	9
SCALE	1:1	TOTAL PAGES	13
DRAWING NO	XZS1-48353-A01-FT1-S		

MT585 24VDC输出	温湿度控制电源	MT585通讯接口 (与MB585通讯接口)	温湿度控制器通讯	HMI 电源及通讯 示意图

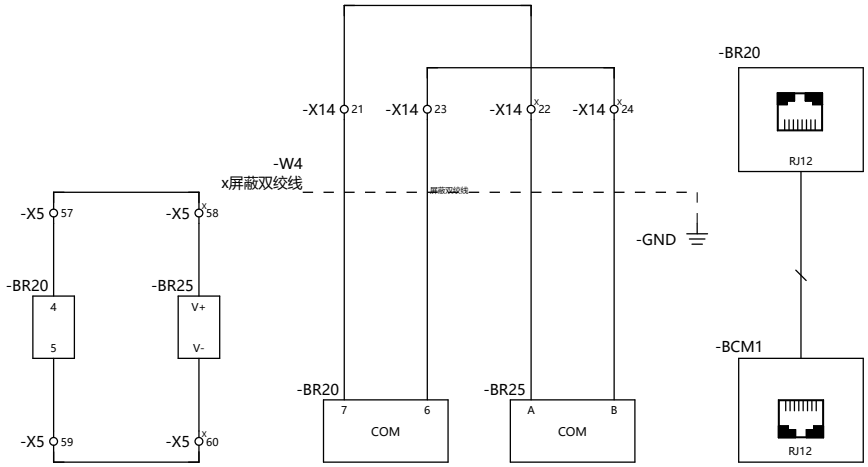

This drawing and information contained thereon is the property of ABB (XIAMEN) Switchgear CO. LTD. and shall not be used, reproduced for any purpose ,or shown to third parties without the written consent of ABB (XIAMEN) Switchgear CO. LTD.

REV.	DESCRIPTION	REV. DATE

DRAWN	XINYU LIU	TITLE	通信回路
CHECKED	Jianjun-Wang		
APPROVED	Yongsheng.Li	CONTRACT NO.:	504485024
FIRST DATE	2025/4/28		

FUNCTION: 动力变压器柜

PROJECT: 天津渤化永利丁辛醇项目

=	FT1	SHEET NO	10
SCALE	1:1	TOTAL PAGES	13

DRAWING NO: XZS1-48353-A01-FT1-S

电压小母线

计量小母线

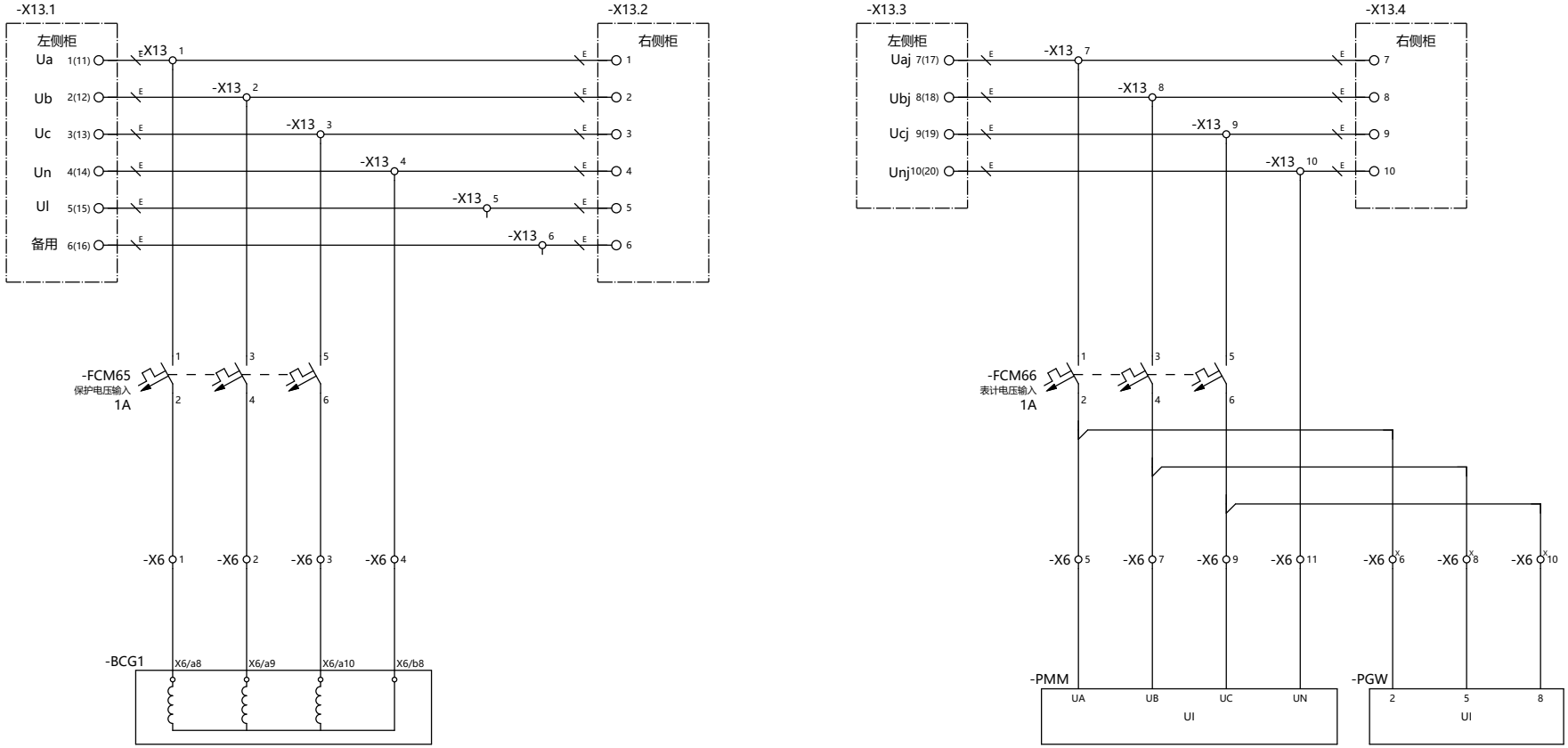

This drawing and information contained thereon is the property of ABB (XIAMEN) Switchgear CO. LTD. and shall not be used, reproduced for any purpose, or shown to third parties without the written consent of ABB (XIAMEN) Switchgear CO. LTD.

REV.	DESCRIPTION	REV. DATE

DRAWN	XINYU LIU	TITLE	电压小母线
CHECKED	Jianjun-Wang		
APPROVED	Yongsheng.Li	CONTRACT NO.:	504485024
FIRST DATE	2025/4/28		

FUNCTION	动力变压器柜
PROJECT	天津渤化永利丁辛醇项目

=	FT1	SHEET NO	11
SCALE	1:1	TOTAL PAGES	13
DRAWING NO	XZS1-48353-A01-FT1-S		

测量电流输入	保护电流输入	零序电流输入	低压侧零序电流输入

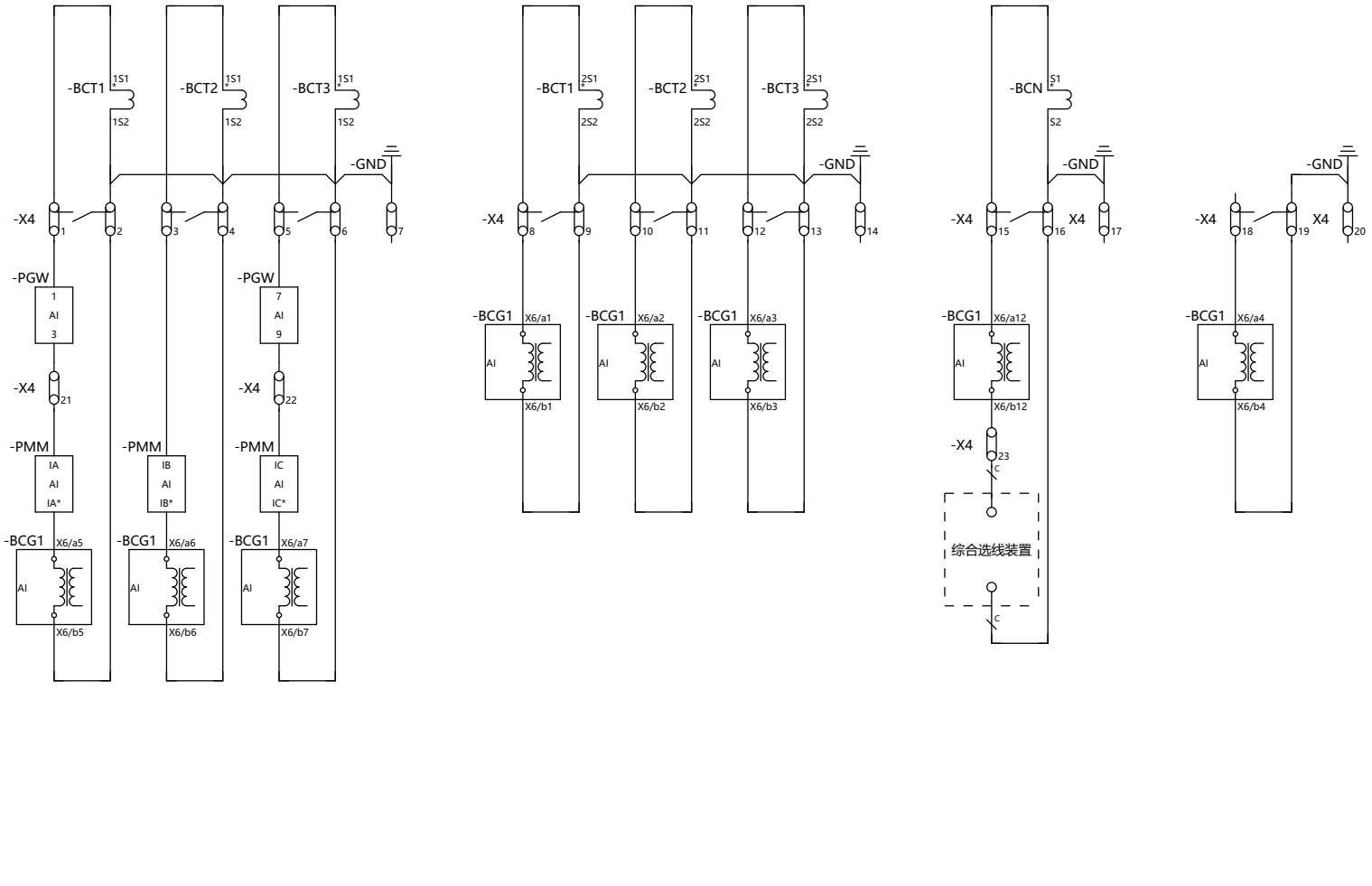

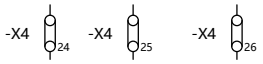

This drawing and information contained thereon is the property of ABB (XIAMEN) Switchgear CO. LTD. and shall not be used, reproduced for any purpose ,or shown to third parties without the written consent of ABB (XIAMEN) Switchgear CO. LTD.

REV.	DESCRIPTION	REV. DATE

DRAWN	XINYU LIU	TITLE	电流回路
CHECKED	Jianjun-Wang		
APPROVED	Yongsheng.Li	CONTRACT NO.:	504485024
FIRST DATE	2025/4/28		

ABB

FUNCTION	动力变压器柜
PROJECT	天津渤化永利丁辛醇项目

=	FT1	SHEET NO	12
SCALE	1:1	TOTAL PAGES	13
DRAWING NO	XZS1-48353-A01-FT1-S		

VD4

-QAB

VD4/P-77

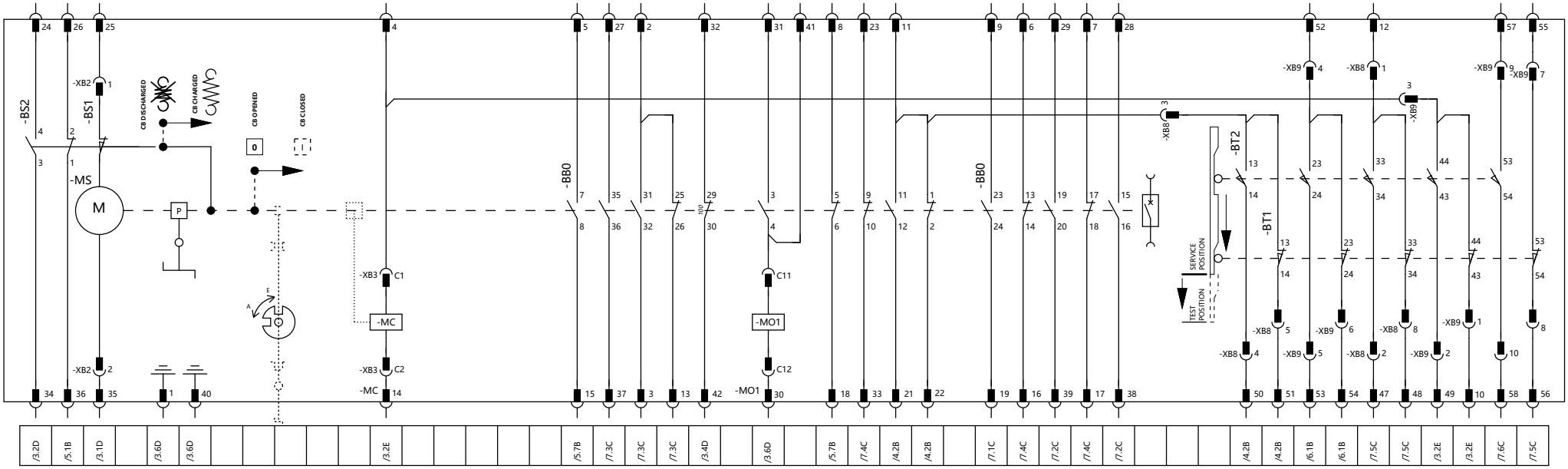

名称	描述	备注
-BS1	储能电机限位开关	
-MS	弹簧操作机构储能电机	
-MC	合闸脱扣器	
-MO1	第一分闸脱扣器	

名称	描述	备注
-BS2	合闸弹簧储能/未储能信号触点	
-BB0	与断路器主轴联动的辅助开关	
-BT1	限位开关(手车位于运行位置)	
-BT2	限位开关(手车位于试验位置)	

接地开关与断路器手车具有可靠的机械闭锁： A)
只有当断路器手车位于试验位置时，才允许操作接地开关 B)
只有当接地开关处于分状态时,断路器手车才允许由试验位置推入运行位置。

电气控制接线图/接点位置参考：
此图所示状态为：断路器手车工作位置 断路器处于分闸状态 操作机构弹簧未储能

This drawing and information contained thereon is the property of ABB (XIAMEN) Switchgear CO. LTD. and shall not be used, reproduced for any purpose, or shown to third parties without the written consent of ABB (XIAMEN) Switchgear CO. LTD.

REV.	DESCRIPTION	REV. DATE

DRAWN	XINYU LIU	TITLE	断路器接线图
CHECKED	Jianjun-Wang		
APPROVED	Yongsheng.Li	CONTRACT NO.:	504485024
FIRST DATE	2025/4/28		

ABB

FUNCTION	动力变压器柜
PROJECT	天津渤化永利丁辛醇项目

= FT1	SHEET NO 13
SCALE 1:1	TOTAL PAGES 13
DRAWING NO	XZS1-48353-A01-FT1-S

设备清单(柜体)

序号	设备号	设备名称	物料号	数量	制造商	型号	设备参数
1	-BAD	电容分压装置	DIK-06-B06N1000C-1	3	/	B06N-1000C-1	Un=6kV
2	-BCN	零序电流互感器	CTZ-GLMZ2150501-A1	1	ABB	LMZ215-80-120	50/1A,CORE:2VA/10P10,120mm
3	-BCT1	电流互感器	CTA-G1K313-0474	1	ABB	LZZBJ9-12/150b/2	31.5KA/3SEC,500/1A,C1:0.5/20VA;C2:5P20/20VA;
4	-BCT2	电流互感器	CTA-G1K313-0474	1	ABB	LZZBJ9-12/150b/2	31.5KA/3SEC,500/1A,C1:0.5/20VA;C2:5P20/20VA;
5	-BCT3	电流互感器	CTA-G1K313-0474	1	ABB	LZZBJ9-12/150b/2	31.5KA/3SEC,500/1A,C1:0.5/20VA;C2:5P20/20VA;
6	-EA2	LED电缆室照明灯	L-CL10-1C-W-AA-CA	1	PEAKS	CL10-1C-W-AA	AC198-242V
7	-EB2	加热器	EP-HEATER-100W	1	SANYANG	1FZEK833B	100W
8	-FA	避雷器	SAS-YH5WZ-10/27-1	3	西安神电	YH5WZ-10/27	额定电压:10KV;持续运行电压:8.0KV;雷电冲击残压:27KV(8/20US 5KA);2ms方波通流容量:400A
9	-QAB	真空断路器	VD4/P-77	1	ABB	VD4	NEW VD4 P(旋转式辅助开关) WITHOUT RL1 WITH 7NO+7NC WITHOUT MT
10	-QCE	接地开关	ET1-BGE2/3	1	ABB	ET1	ET1 WITH BGE2&BGE3
11	-REL1	闭锁电磁铁	EP-MAGNET	1	PEAKS	EM10-S	/

This drawing and information contained thereon is the property of ABB (XIAMEN) Switchgear CO. LTD. and shall not be used, reproduced for any purpose ,or shown to third parties without the written consent of ABB (XIAMEN) Switchgear CO. LTD.

REV.	DESCRIPTION	REV. DATE

DRAWN	XINYU LIU	
CHECKED	Jianjun-Wang	
APPROVED	Yongsheng.Li	
FIRST DATE	2025/4/28	

TITLE 设备清单(柜体)

CONTRACT NO.: 504485024

FUNCTION 动力变压器柜

PROJECT 天津渤化永利丁辛醇项目

= FT1 | SHEET NO 1

SCALE 1:1 | TOTAL PAGES 3

DRAWING NO XZS1-48353-A01-FT1-E

设备清单(低压室面板)

序号	设备号	设备名称	物料号	数量	制造商	型号	设备参数
1	-BCG1	变压器保护	CS-BHYL-02	1	北京四方继保自动化股份有限公司	CSD-241A-G	装置电源：DC220V;电流输入：1A;电压输入：AC100V;
2	-BCM1	就地显示器	RLY-MP58	1	ABB	MP58 （LHMI）	/
3	-PFV1	强制型带电显示器	VIO-DXN-Q-A10-1	1	LEELEN	DXN-Q	DXN-Q 强制型带电显示器UGZS1 3KV/6KV/10kV，辅助电源：AC/DC 220/110V
4	-PFX1	手车位置指示	PIL-ADWZ25-B/2	1	LEELEN	ADWZ25-B/2	98-242V AC/DC,TRUCK POSITION
5	-PFX2	断路器状态指示	PIL-ADWZ25-K/2	1	LEELEN	ADWZ25-K/2	98-242V AC/DC,CB. STATUS
6	-PFX3	接地开关状态指示	PIL-ADWZ25-E/1	1	LEELEN	ADWZ25-E/1	98-242V AC/DC,EARTHING SWITCH STATUS
7	-PMM	多功能表	CS-BHYL-09	1	川泽电气	RISL-E96-5A-N-N-N-N	装置电源：DC220V ;电流输入：1A;电压输入：AC100V
8	-PW1	白色指示灯	LSA-CL2-520C	1	ABB	CL2-520C	Un=220V DC,WHITE
9	-RL10	五防锁	CS-BHYL-08	1	珠海优特电力科技股份有限公司	DNBS-2J	/
10	-SAM	高灵敏避雷器放电计数器	SAK-DJSII-C-11	1	安徽通辰	DJS-II/C	Un=110~220DC/AC 4.5m;3m
11	-SB1	黑色按钮	PBA-CP1-10B-11	1	ABB	CP1-10B-11	1NO+1NC,不带标牌套
12	-SB2	黑色自锁按钮	PBA-CP2-10B-11	1	ABB	CP2-10B-11	1NO+1NC,不带标牌套
13	-SFS31	选择开关	SSJ-E01-2-401	1	JIANGYIN CHANGJIANG	LW38D-164B0339/2PY-DAN-AX	
14	-SFS32	选择开关	SSJ-E02-4-402	1	JIANGYIN CHANGJIANG	LW38D-164N1257/4P-AX	
15	-XLP1	插拔式压板	T-JY3-2	1	UPUN	JY3-2	驼色
16	-XLP2	插拔式压板	T-JY3-2	1	UPUN	JY3-2	驼色
17	-XLP3	插拔式压板	T-JY3-2	1	UPUN	JY3-2	驼色
18	-XLP4	插拔式压板	T-JY3-2	1	UPUN	JY3-2	驼色
19	-XLP5	插拔式压板	T-JY3-2	1	UPUN	JY3-2	驼色
20	-XLP6	插拔式压板	T-JY3-2	1	UPUN	JY3-2	驼色
21	-XLP7	插拔式压板	T-JY3-2	1	UPUN	JY3-2	驼色
22	-XLP8	插拔式压板	T-JY3-2	1	UPUN	JY3-2	驼色

This drawing and information contained thereon is the property of ABB (XIAMEN) Switchgear CO. LTD. and shall not be used, reproduced for any purpose ,or shown to third parties without the written consent of ABB (XIAMEN) Switchgear CO. LTD.

REV.	DESCRIPTION	REV. DATE

DRAWN	XINYU LIU	TITLE	设备清单(低压室面板)
CHECKED	Jianjun-Wang		
APPROVED	Yongsheng.Li	CONTRACT NO.:	504485024
FIRST DATE	2025/4/28		

FUNCTION 动力变压器柜

PROJECT 天津渤化永利丁辛醇项目

= FT1 | SHEET NO 2

SCALE 1:1 | TOTAL PAGES 3

DRAWING NO XZS1-48353-A01-FT1-E

设备清单(低压室)

序号	设备号	设备名称	物料号	数量	制造商	型号	设备参数
1	-BGD1	微动开关	EP-LVMS	1	PEAKS	TS11-001-01	MECHANICAL LIFE TIME>1000000TIMES
2	-BR20	TEMPERATURE MONITOR	RLY-MT585	1	ABB	MT585	100-240VDC/AC
3	-BR25	Humidity & Temperature Sensor	1YHT010000P0009	1	/	/	/
4	-EA1	LED低压室照明灯	L-CL10-1C-W-AA	1	PEAKS	CL10-1C-W-AA	SUPPLY: AC198~242V; POWER: <4W
5	-FCM10	微型空气开关	MCBA-202M-C1DC;MBDA-S2C-H11R	1;1	ABB	S202M-C1DC;S2C-H11R	Un=440V DC,In=1A,2-POLE
6	-FCM20	微型空气开关	MCBA-202M-C3DC;MBDA-S2C-H11R	1;1	ABB	S202M-C3DC;S2C-H11R	Un=440V DC,In=3A,2-POLE
7	-FCM30	微型空气开关	MCBA-202M-C3DC;MBDA-S2C-H11R	1;1	ABB	S202M-C3DC;S2C-H11R	Un=440V DC,In=3A,2-POLE
8	-FCM65	微型空气开关	MCBA-2030001R0014;MBDA-S2C-H11R	1;1	ABB	S203-C1;S2C-H11R	Un=400V AC,In=1A,3-POLE
9	-FCM66	微型空气开关	MCBA-2030001R0014;MBDA-S2C-H11R	1;1	ABB	S203-C1;S2C-H11R	Un=400V AC,In=1A,3-POLE
10	-FCM90	微型空气开关	MCBA-2010001R0034;MBDA-S2C-H11R	1;1	ABB	S201-C3;S2C-H11R	Un=230V AC,In=3A,1-POLE
11	-KFC1	中间继电器	RLY-CRMX220DC4	1	ABB	CRMX220DC4	CR-MX220DC4,UN=220V DC
12	-KFD1	轨道继电器	CS-504485024-01	1	北京四方	CSN-11	/
13	-PGW	电能表	CS-BHYL-07	1	Wisdom	DSZ178	装置电源：DC220V;电流输入：1A;电压输入：AC100V
14	-PMS	电度表挂表架	PMM-AUX-01	1	/	270	

This drawing and information contained thereon is the property of ABB (XIAMEN) Switchgear CO. LTD. and shall not be used, reproduced for any purpose ,or shown to third parties without the written consent of ABB (XIAMEN) Switchgear CO. LTD.

REV.	DESCRIPTION	REV. DATE

DRAWN	XINYU LIU	TITLE	设备清单(低压室)
CHECKED	Jianjun-Wang		
APPROVED	Yongsheng.Li	CONTRACT NO.:	504485024
FIRST DATE	2025/4/28		

FUNCTION: 动力变压器柜

PROJECT: 天津渤化永利丁辛醇项目

= FT1 | SHEET NO 3 | SCALE 1:1 | TOTAL PAGES 3

DRAWING NO XZS1-48353-A01-FT1-E

REV.	DESCRIPTION	REV. DATE

This drawing and information contained thereon is the property of ABB (XIAMEN) Switchgear CO. LTD. and shall not be used, reproduced for any purpose ,or shown to third parties without the written consent of ABB (XIAMEN) Switchgear CO. LTD.

==A01=FT1+-X1

备注	外引电缆	设备	线号	端子号	型号	线号	设备	外引电缆	备注
		-FCM10:4		1	NEK4		-QAB:25		
				2	NEK4		-QAB:24		
		-FCM10:2		3	NEK4		-QAB:35		
				4	NEK4		-PW1:x2		
				5	NEK4		-KFC1:A2		
		-QAB:34		6	NEK4		-PW1:x1		
				7	NEK4		-KFC1:A1		

☆ 柜间小母线,随柜提供

△ 柜间控制电路(由客户自备)

短接排

分隔板

(测试短接片

O 其他

DRAWN	XINYU LIU	TITLE
CHECKED	Jianjun-Wang	端子图表 ==A01=FT1+-X1
APPROVED	Yongsheng.Li	CONTRACT NO.: 504485024
FIRST DATE	2025/4/28	
REV. DATE		
DESCRIPTION		
REV.		

FUNCTION 动力变压器柜

PROJECT 天津渤化永利丁辛醇项目

=	FT1	SHEET NO.	1
SCALE	1:1	TOTAL PAGES	12
DRAWING NO.	XZS1-48353-A01-FT1-T		

REV.	DESCRIPTION	REV. DATE

This drawing and information contained thereon is the property of ABB (XIAMEN) Switchgear CO. LTD. and shall not be used, reproduced for any purpose ,or shown to third parties without the written consent of ABB (XIAMEN) Switchgear CO. LTD.

==A01=FT1+-X2

备注	外引电缆	设备	线号	端子号	型号	线号	设备	外引电缆	备注
		-FCM20:4		1	NEK4		-QAB:11		
				2	NEK4		-QCE:BGE2/42		
				3	NEK4		-BR20:1		
				4	NEK4		-PMM:L+		
				5	NEK4		-PGW:12		
				6	NEK4		-SAM:P2/01		
				7	NEK4		-BCG1:X1/c24		
				8	NEK4		-QAB:26		
	△	-超高温跳闸		9	NEK4		-KFD1:9		
	△	-高温报警		10	NEK4				
				11	NEK4				
				12	NEK4				
				13	NEK4				
				14	NEK4				
				15	NEK4		-SFS32:11		
				16	NEK4		-SB1:13		
				17	NEK4		-XLP3:1		
				18	NEK4		-QAB:8		
				19	NEK4		-QAB:5		
				20	NEK4		-FCM90:11		
				21	NEK4		-QAB:52		
				22	NEK4		-QCE:BGE2/40		
	△	-邻柜继保装置故障		23	NEK4				
				24	NEK4				
	△	-温控器故障		25	NEK4				
	△	-变压器门开		26	NEK4				
				27	NEK4				
				28	NEK4				
		-FCM20:2		29	NEK4		-PFX2:1		
				30	NEK4		-BR20:2		
				31	NEK4		-PMM:N-		
				32	NEK4		-PGW:13		
				33	NEK4		-SAM:P2/03		
				34	NEK4		-BCG1:X1/c28		
		-KFD1:6		35	NEK4		-BCG1:X1/c12		
				36	NEK4		-BCG1:X3/c32		
				37	NEK4				
		-QAB:21		38	NEK4		-PFX2:3		
		-QAB:22		39	NEK4		-PFX2:2		
		-QAB:51		40	NEK4		-PFX1:3		
		-QAB:50		41	NEK4		-PFX1:2		
		-QCE:BGE2/43		42	NEK4		-PFX3:3		
		-QCE:BGE3/23		43	NEK4		-PFX3:2		
		-QAB:36		44	NEK4		-BCG1:X1/a2		
	△	-超高温跳闸		45	NEK4		-XLP5:1		
		-XLP5:2		46	NEK4		-KFD1:1		
		-KFD1:8		47	NEK4		-BCG1:X1/a4		
	△	-高温报警		48	NEK4		-XLP6:1		
				49	NEK4		-BCG1:X1/a8		
				50	NEK4		-BCG1:X1/a10		
				51	NEK4		-BCG1:X1/a12		
				52	NEK4		-BCG1:X1/c2		
		-QAB:18		53	NEK4		-BCG1:X3/a20		
		-QAB:15		54	NEK4		-BCG1:X3/a22		

☆ 柜间小母线,随柜提供

△ 柜间控制电路(由客户自备)

短接排

✕ 分隔板

(测试短接片

O 其他

REV.	DESCRIPTION	REV. DATE

DRAWN	XINYU LIU	TITLE
CHECKED	Jianjun-Wang	
APPROVED	Yongsheng.Li	CONTRACT NO.:
FIRST DATE	2025/4/28	504485024

端子图表 ==A01=FT1+-X2

FUNCTION 动力变压器柜

PROJECT 天津渤化永利丁辛醇项目

=	FT1	
SCALE	1:1	SHEET NO. 2
DRAWING NO.	XZS1-48353-A01-FT1-T	TOTAL PAGES 12

REV.	DESCRIPTION	REV. DATE

This drawing and information contained thereon is the property of ABB (XIAMEN) Switchgear CO. LTD. and shall not be used, reproduced for any purpose ,or shown to third parties without the written consent of ABB (XIAMEN) Switchgear CO. LTD.

==A01=FT1+-X2

备注	外引电缆	设备	线号	端子号	型号	线号	设备	外引电缆	备注
		-FCM10:11		55	RCT4SW		-FCM90:11		
		-FCM66:12		56	NEK4		-BCG1:X3/a24		
		-QAB:54		57	NEK4		-BCG1:X3/a26		
		-QAB:53		58	NEK4		-BCG1:X3/a28		
		-QCE:BGE2/41		59	NEK4		-BCG1:X3/a30		
		-QCE:BGE3/21		60	NEK4		-BCG1:X3/a32		
	△	-邻柜继保装置故障		61	NEK4		-BCG1:X3/c20		
				62	NEK4		-BCG1:X3/c22		
	△	-温控器故障		63	NEK4		-XLP7:1		
	△	-变压器门开		64	NEK4		-BCG1:X3/c26		
				65	NEK4		-BCG1:X3/c28		
				66	NEK4		-BCG1:X3/c30		
				67	NEK4		-XLP8:1		
				68	NEK4		-XLP8:2		

☆ 柜间小母线,随柜提供

△ 柜间控制电路(由客户自备)

短接排

分隔板

(测试短接片

O 其他

DRAWN	XINYU LIU
CHECKED	Jianjun-Wang
APPROVED	Yongsheng.Li
FIRST DATE	2025/4/28
REV. DATE	
REV.	
DESCRIPTION	

TITLE: 端子图表 ==A01=FT1+-X2

CONTRACT NO.: 504485024

FUNCTION: 动力变压器柜

PROJECT: 天津渤化永利丁辛醇项目

=	FT1
SCALE	1:1
SHEET NO	2.a
TOTAL PAGES	12
DRAWING NO	XZS1-48353-A01-FT1-T

REV.	DESCRIPTION	REV. DATE

This drawing and information contained thereon is the property of ABB (XIAMEN) Switchgear CO. LTD. and shall not be used, reproduced for any purpose ,or shown to third parties without the written consent of ABB (XIAMEN) Switchgear CO. LTD.

==A01=FT1+-X3

备注	外引电缆	设备	线号	端子号	型号	线号	设备	外引电缆	备注
				1	NEK4		-FCM30:4		
				2	NEK4				
				3	NEK4				
				4	NEK4		-RL10:+		
				5	NEK4		-SFS32:3		
				6	NEK4				
				7	NEK4				
				8	NEK4		-BCG1:X2/c2		
				9	NEK4		-BCG1:X2/c10		
				10	NEK4		-PFV1:220V		
				11	NEK4				
		-FCM30:2		12	NEK4		-QAB:14		
				13	NEK4		-QAB:30		
				14	NEK4		-BCG1:X2/c22		
				15	NEK4		-PFV1:0V		
				16	NEK4		-REL1:E2		
				17	NEK4				
				18	NEK4		-QAB:49		
	△	-变压器门关		19	NEK4				
				20	NEK4		-X3:27		
	△	-变压器门关		21	NEK4				
				22	NEK4		-QAB:10		
		-QAB:32		23	NEK4		-QAB:4		
				24	NEK4				
		-BCG1:X2/c18		25	NEK4		-SFS31:4		
				26	NEK4		-BCG1:X2/a6		
		-X3:20		27	NEK4		-BCG1:X2/a18		
		-QAB:42		28	NEK4		-BCG1:X2/a16		
				29	NEK4		-BCG1:X2/a20		
				30	NEK4		-BCG1:X2/a4		
		-SFS31:2		31	NEK4		-BCG1:X2/c16		
				32	NEK4				
				33	NEK4		-BCG1:X2/c14		
				34	NEK4				
				35	NEK4				
				36	NEK4		-BCG1:X2/c20		
		-BCG1:X2/c12		37	NEK4		-XLP2:2		
				38	NEK4				
				39	NEK4				
		-QAB:31		40	NEK4		-BCG1:X2/a14		
				41	NEK4		-BCG1:X2/a12		
				42	NEK4		-QAB:41		
		-PFV1:COM		43	NEK4		-REL1:E1		
				44	NEK4		-BCG1:X2/c6		

☆ 柜间小母线,随柜提供

△ 柜间控制电路(由客户自备)

短接排

✕ 分隔板

(测试短接片

O 其他

REV.	
DESCRIPTION	
REV. DATE	
DRAWN	XINYU LIU
CHECKED	Jianjun-Wang
APPROVED	Yongsheng.Li
FIRST DATE	2025/4/28
TITLE	端子图表 ==A01=FT1+-X3
CONTRACT NO.:	504485024
FUNCTION	动力变压器柜
PROJECT	天津渤化永利丁辛醇项目
=	FT1
SCALE	1:1
SHEET NO	3
TOTAL PAGES	12
DRAWING NO	XZS1-48353-A01-FT1-T

REV.	DESCRIPTION	REV. DATE

This drawing and information contained thereon is the property of ABB (XIAMEN) Switchgear CO. LTD. and shall not be used, reproduced for any purpose ,or shown to third parties without the written consent of ABB (XIAMEN) Switchgear CO. LTD.

==A01=FT1+-X4

备注	外引电缆	设备	线号	端子号	型号	线号	设备	外引电缆	备注
		-BCT1:1S1		1	NEK6S		-PGW:1		
		-BCT1:1S2		2	NEK6S		-BCG1:X6/b5		
		-BCT2:1S1		3	NEK6S		-PMM:IB		
		-BCT2:1S2		4	NEK6S		-BCG1:X6/b6		
		-BCT3:1S1		5	NEK6S		-PGW:7		
		-BCT3:1S2		6	NEK6S		-BCG1:X6/b7		
		-GND		7	NEK6S				
		-BCT1:2S1		8	NEK6S		-BCG1:X6/a1		
		-BCT1:2S2		9	NEK6S		-BCG1:X6/b1		
		-BCT2:2S1		10	NEK6S		-BCG1:X6/a2		
		-BCT2:2S2		11	NEK6S		-BCG1:X6/b2		
		-BCT3:2S1		12	NEK6S		-BCG1:X6/a3		
		-BCT3:2S2		13	NEK6S		-BCG1:X6/b3		
		-GND		14	NEK6S				
		-BCN:S1		15	NEK6S		-BCG1:X6/a12		
		-BCN:S2		16	NEK6S		-综合选线装置	△	
		-GND		17	NEK6S				
				18	NEK6S		-BCG1:X6/a4		
				19	NEK6S		-BCG1:X6/b4		
		-GND		20	NEK6S				
		-PGW:3		21	NEK6S		-PMM:IA		
		-PGW:9		22	NEK6S		-PMM:IC		
		-BCG1:X6/b12		23	NEK6S		-综合选线装置	△	
				24	NEK6S				
				25	NEK6S				
				26	NEK6S				

☆ 柜间小母线,随柜提供

△ 柜间控制电路(由客户自备)

短接排

✕ 分隔板

(测试短接片

O 其他

REV.	DESCRIPTION	REV. DATE	
			DRAWN XINYU LIU
			CHECKED Jianjun-Wang
			APPROVED Yongsheng.Li
			FIRST DATE 2025/4/28

TITLE 端子图表 ==A01=FT1+-X4

CONTRACT NO.: 504485024

FUNCTION 动力变压器柜

PROJECT 天津渤化永利丁辛醇项目

= FT1

SCALE 1:1

SHEET NO. 4

TOTAL PAGES 12

DRAWING NO. XZS1-48353-A01-FT1-T

REV.	DESCRIPTION	REV. DATE

This drawing and information contained thereon is the property of ABB (XIAMEN) Switchgear CO. LTD. and shall not be used, reproduced for any purpose ,or shown to third parties without the written consent of ABB (XIAMEN) Switchgear CO. LTD.

==A01=FT1+-X5

备注	外引电缆	设备	线号	端子号	型号	线号	设备	外引电缆	备注
				1	NEK4		-KFC1:14		
				2	NEK4		-KFC1:11		
				3	NEK4		-QAB:9		
				4	NEK4		-QAB:19		
				5	NEK4		-QAB:28		
				6	NEK4		-QAB:38		
				7	NEK4		-QAB:29		
				8	NEK4		-QAB:39		
				9	NEK4		-QAB:27		
				10	NEK4		-QAB:37		
				11	NEK4		-QAB:2		
				12	NEK4		-QAB:3		
				13	NEK4		-QAB:13		
				14	NEK4		-QAB:6		
				15	NEK4		-QAB:16		
				16	NEK4		-QAB:7		
				17	NEK4		-QAB:17		
				18	NEK4		-QAB:23		
				19	NEK4		-QAB:33		
				20	NEK4		-QAB:55		
				21	NEK4		-QAB:56		
				22	NEK4		-QAB:48		
				23	NEK4		-QAB:12		
				24	NEK4		-QAB:47		
				25	NEK4		-QAB:57		
				26	NEK4		-QAB:58		
	△	-变压器本体		27	NEK4		-QCE:BGE2/44		
	△	-变压器本体		28	NEK4		-QCE:BGE2/45		
				29	NEK4		-QCE:BGE2/46		
				30	NEK4		-QCE:BGE2/47		
				31	NEK4		-QCE:BGE3/24		
				32	NEK4		-QCE:BGE3/25		
				33	NEK4		-QCE:BGE3/26		
				34	NEK4		-QCE:BGE3/27		
				35	NEK4		-SFS32:5		
				36	NEK4		-SFS32:6		
				37	NEK4		-SFS32:7		
				38	NEK4		-SFS32:8		
				39	NEK4		-FCM20:11		
				40	NEK4		-FCM20:12		
				41	NEK4		-SAM:P1/03		
				42	NEK4		-SAM:P1/04		
				43	NEK4		-BCG1:X3/c12		
				44	NEK4		-BCG1:X3/a12		
				45	NEK4		-BCG1:X3/c16		
				46	NEK4		-BCG1:X3/a16		
				47	NEK4		-BCG1:X5/c12		
				48	NEK4		-BCG1:X5/a12		
				49	NEK4		-BCG1:X2/c28		
				50	NEK4		-BCG1:X2/c32		
				51	NEK4		-BCG1:X2/c30		
				52	NEK4		-BCG1:X1/a22		
				53	NEK4		-BCG1:X1/a20		
				54	NEK4		-BCG1:X1/a18		

☆ 柜间小母线,随柜提供

△ 柜间控制电路(由客户自备)

短接排

分隔板

(测试短接片

O 其他

REV.	DESCRIPTION	REV. DATE

DRAWN	XINYU LIU	TITLE
CHECKED	Jianjun-Wang	端子图表 ==A01=FT1+-X5
APPROVED	Yongsheng.Li	CONTRACT NO.:
FIRST DATE	2025/4/28	504485024

FUNCTION 动力变压器柜

PROJECT 天津渤化永利丁辛醇项目

=	FT1	SHEET NO. 5
SCALE	1:1	TOTAL PAGES 12
DRAWING NO.	XZS1-48353-A01-FT1-T	

REV.	DESCRIPTION	REV. DATE

This drawing and information contained thereon is the property of ABB (XIAMEN) Switchgear CO. LTD. and shall not be used, reproduced for any purpose ,or shown to third parties without the written consent of ABB (XIAMEN) Switchgear CO. LTD.

==A01=FT1+-X5

备注	外引电缆	设备	线号	端子号	型号	线号	设备	外引电缆	备注
	△	-至邻柜继保BI		55	NEK4		-BCG1:X1/a14		
	△	-至邻柜继保BI		56	NEK4		-BCG1:X1/a16		
				57	NEK4		-BR20:4		
				58	NEK4		-BR25:V+		
				X					
				59	NEK4		-BR20:5		
				60	NEK4		-BR25:V-		
				X					
				61	NEK4				
				62	NEK4				
				63	NEK4				
				64	NEK4				
				65	NEK4				
				66	NEK4				
				67	NEK4				
				68	NEK4				
				69	NEK4				
				70	NEK4				

☆ 柜间小母线,随柜提供

△ 柜间控制电路(由客户自备)

短接排

X 分隔板

(测试短接片

O 其他

REV.		
DESCRIPTION		
REV. DATE		
DRAWN	XINYU LIU	TITLE
CHECKED	Jianjun-Wang	端子图表 ==A01=FT1+-X5
APPROVED	Yongsheng.Li	CONTRACT NO.:
FIRST DATE	2025/4/28	504485024
FUNCTION	动力变压器柜	
PROJECT	天津渤化永利丁辛醇项目	
=	FT1	SHEET NO. 5.a
SCALE	1:1	TOTAL PAGES 12
DRAWING NO.	XZS1-48353-A01-FT1-T	

REV.	DESCRIPTION	REV. DATE

This drawing and information contained thereon is the property of ABB (XIAMEN) Switchgear CO. LTD. and shall not be used, reproduced for any purpose ,or shown to third parties without the written consent of ABB (XIAMEN) Switchgear CO. LTD.

==A01=FT1+-X6

备注	外引电缆	设备	线号	端子号	型号	线号	设备	外引电缆	备注
		-FCM65:2		1	NEK4		-BCG1:X6/a8		
		-FCM65:4		2	NEK4		-BCG1:X6/a9		
		-FCM65:6		3	NEK4		-BCG1:X6/a10		
		-X13:4		4	NEK4		-BCG1:X6/b8		
		-FCM66:2		5	NEK4		-PMM:UA		
				6	NEK4		-PGW:2		
		-FCM66:4		7	NEK4		-PMM:UB		
				8	NEK4		-PGW:5		
		-FCM66:6		9	NEK4		-PMM:UC		
				10	NEK4		-PGW:8		
		-X13:10		11	NEK4		-PMM:UN		

☆ 柜间小母线,随柜提供

△ 柜间控制电路(由客户自备)

短接排

分隔板

(测试短接片

O 其他

REV.		
DESCRIPTION		
REV. DATE		
DRAWN	XINYU LIU	TITLE
CHECKED	Jianjun-Wang	端子图表 ==A01=FT1+-X6
APPROVED	Yongsheng.Li	CONTRACT NO.:
FIRST DATE	2025/4/28	504485024
FUNCTION	动力变压器柜	
PROJECT	天津渤化永利丁辛醇项目	
=	FT1	SHEET NO. 6
SCALE	1:1	TOTAL PAGES 12
DRAWING NO.	XZS1-48353-A01-FT1-T	

REV.	DESCRIPTION	REV. DATE

This drawing and information contained thereon is the property of ABB (XIAMEN) Switchgear CO. LTD. and shall not be used, reproduced for any purpose ,or shown to third parties without the written consent of ABB (XIAMEN) Switchgear CO. LTD.

==A01=FT1+-X9

备注	外引电缆	设备	线号	端子号	型号	线号	设备	外引电缆	备注
				● 1	NEK4		-EB2:1		
				● 2	NEK4		-SB2:13		
		-FCM90:2		● 3	NEK4		-BGD1:1		
				● 4	NEK4		-EB2:2		
				● 5	NEK4		-EA2:A2		
		-X11:4		● 6	NEK4		-EA1:A2		
		-SB2:14		- 7	NEK4		-EA2:A1		
		-EA1:A1		8	RCT4SW		-BGD1:2		

☆ 柜间小母线,随柜提供

△ 柜间控制电路(由客户自备)

短接排

✕ 分隔板

(测试短接片

O 其他

REV.		
DESCRIPTION		
REV. DATE		
DRAWN	XINYU LIU	TITLE
CHECKED	Jianjun-Wang	端子图表 ==A01=FT1+-X9
APPROVED	Yongsheng.Li	CONTRACT NO.:
FIRST DATE	2025/4/28	504485024
FUNCTION	动力变压器柜	
PROJECT	天津渤化永利丁辛醇项目	
=	FT1	SHEET NO. 7
SCALE	1:1	TOTAL PAGES 12
DRAWING NO.	XZS1-48353-A01-FT1-T	

REV.	DESCRIPTION	REV. DATE

This drawing and information contained thereon is the property of ABB (XIAMEN) Switchgear CO. LTD. and shall not be used, reproduced for any purpose ,or shown to third parties without the written consent of ABB (XIAMEN) Switchgear CO. LTD.

==A01=FT1+-X11

备注	外引电缆	设备	线号	端子号	型号	线号	设备	外引电缆	备注
6黑色	☆	-X11.2:1		1	A3C 6		-FCM90:1		
6黑色	☆	-X11.1:1							
6黑色	☆	-X11.2:2		2	A3C 6				
6黑色	☆	-X11.1:2							
6黑色	☆	-X11.2:3		3	A3C 6				
6黑色	☆	-X11.1:3							
6黑色	☆	-X11.2:4		4	A3C 6		-X9:6		
6黑色	☆	-X11.1:4							
6黑色	☆	-X11.2:5		5	A3C 6		-FCM10:3		
6黑色	☆	-X11.1:5							
6黑色	☆	-X11.2:6		6	A3C 6		-FCM10:1		
6黑色	☆	-X11.1:6							
6黑色	☆	-X11.2:7		7	A3C 6		-FCM30:3		
6黑色	☆	-X11.1:7							
6黑色	☆	-X11.2:8		8	A3C 6		-FCM30:1		
6黑色	☆	-X11.1:8							

☆ 柜间小母线,随柜提供

△ 柜间控制电路(由客户自备)

短接排

分隔板

(测试短接片

O 其他

REV.	DESCRIPTION	REV. DATE

DRAWN XINYU LIU
CHECKED Jianjun-Wang
APPROVED Yongsheng.Li
FIRST DATE 2025/4/28

TITLE 端子图表 ==A01=FT1+-X11

CONTRACT NO.: 504485024

FUNCTION 动力变压器柜

PROJECT 天津渤化永利丁辛醇项目

= FT1
SCALE 1:1
SHEET NO. 8
TOTAL PAGES 12
DRAWING NO. XZS1-48353-A01-FT1-T

REV.	DESCRIPTION	REV. DATE

This drawing and information contained thereon is the property of ABB (XIAMEN) Switchgear CO. LTD. and shall not be used, reproduced for any purpose ,or shown to third parties without the written consent of ABB (XIAMEN) Switchgear CO. LTD.

==A01=FT1+-X13

备注	外引电缆	设备	线号	端子号	型号	线号	设备	外引电缆	备注
	☆	-X13.1:1(11)		1	A4C 4		-FCM65:1		
	☆	-X13.2:1							
	☆	-X13.1:2(12)		2	A4C 4		-FCM65:3		
	☆	-X13.2:2							
	☆	-X13.1:3(13)		3	A4C 4		-FCM65:5		
	☆	-X13.2:3							
	☆	-X13.1:4(14)		4	A4C 4		-X6:4		
	☆	-X13.2:4							
	☆	-X13.1:5(15)		5	A4C 4				
	☆	-X13.2:5							
	☆	-X13.1:6(16)		6	A4C 4				
	☆	-X13.2:6							
	☆	-X13.3:7(17)		7	A4C 4		-FCM66:1		
	☆	-X13.4:7							
	☆	-X13.3:8(18)		8	A4C 4		-FCM66:3		
	☆	-X13.4:8							
	☆	-X13.3:9(19)		9	A4C 4		-FCM66:5		
	☆	-X13.4:9							
	☆	-X13.3:10(20)		10	A4C 4		-X6:11		
	☆	-X13.4:10							

☆ 柜间小母线,随柜提供

△ 柜间控制电路(由客户自备)

短接排

分隔板

(测试短接片

O 其他

REV.		
DESCRIPTION		
REV. DATE		
DRAWN	XINYU LIU	TITLE
CHECKED	Jianjun-Wang	端子图表 ==A01=FT1+-X13
APPROVED	Yongsheng.Li	CONTRACT NO.:
FIRST DATE	2025/4/28	504485024
FUNCTION	动力变压器柜	
PROJECT	天津渤化永利丁辛醇项目	
=	FT1	SHEET NO. 9
SCALE	1:1	TOTAL PAGES 12
DRAWING NO.	XZS1-48353-A01-FT1-T	

REV.	DESCRIPTION	REV. DATE

This drawing and information contained thereon is the property of ABB (XIAMEN) Switchgear CO. LTD. and shall not be used, reproduced for any purpose ,or shown to third parties without the written consent of ABB (XIAMEN) Switchgear CO. LTD.

==A01=FT1+-X14

备注	外引电缆	设备	线号	端子号	型号	线号	设备	外引电缆	备注
	☆	-X14:2		1	NEK4		-BR20:10		
	☆	-X14:1		2	NEK4				
	☆	-X14:4		3	NEK4		-BR20:9		
	☆	-X14:3		4	NEK4				
	☆	-X14:6		5	NEK4		-ST1		
	☆	-X14:5		6	NEK4				
	☆	-X14:8		7	NEK4		-PGW:25		
	☆	-X14:7		8	NEK4				
	☆	-X14:10		9	NEK4		-PGW:26		
	☆	-X14:9		10	NEK4				
	☆	-X14:12		11	NEK4		-ST1		
	☆	-X14:11		12	NEK4				
				13	NEK4		-BCG1:X4/1		
				14	NEK4		-BCG1:X4/2		
				15	NEK4		-BCG1:X4/3		
				16	NEK4		-SAM:P1/01		
				17	NEK4		-SAM:P1/02		
				18	NEK4		-PMM:A		
				19	NEK4		-PMM:B		
				20	NEK4		-PMM:S		
				21	NEK4		-BR20:7		
				22	NEK4		-BR25:A		
				23	NEK4		-BR20:6		屏蔽双绞线
				24	NEK4		-BR25:B		

☆ 柜间小母线,随柜提供

△ 柜间控制电路(由客户自备)

短接排

分隔板

(测试短接片

O 其他

DRAWN	XINYU LIU
CHECKED	Jianjun-Wang
APPROVED	Yongsheng.Li
FIRST DATE	2025/4/28
REV. DATE	
REV.	
DESCRIPTION	

TITLE: 端子图表 ==A01=FT1+-X14

CONTRACT NO.: 504485024

FUNCTION: 动力变压器柜

PROJECT: 天津渤化永利丁辛醇项目

=	FT1
SCALE	1:1
SHEET NO.	10
TOTAL PAGES	12
DRAWING NO.	XZS1-48353-A01-FT1-T

单线图

一次设备索引			
设备号	设备名称	数量	物料号
-QAB	真空断路器	1	VD4/P-77
-BCT1	电流互感器	1	CTA-G2K311-0841
-BCT2	电流互感器	1	CTA-G2K311-0841
-BCT3	电流互感器	1	CTA-G2K311-0841
-BAD	电容分压装置	3	DIK-06-B06N1000C-1
-QCE	接地开关	1	ET1-BGE2/3
-FA	避雷器	3	SAS-YH5WZ-10/27-1
-BCN	零序电流互感器	1	CTZ-GLMZ2150501-A1

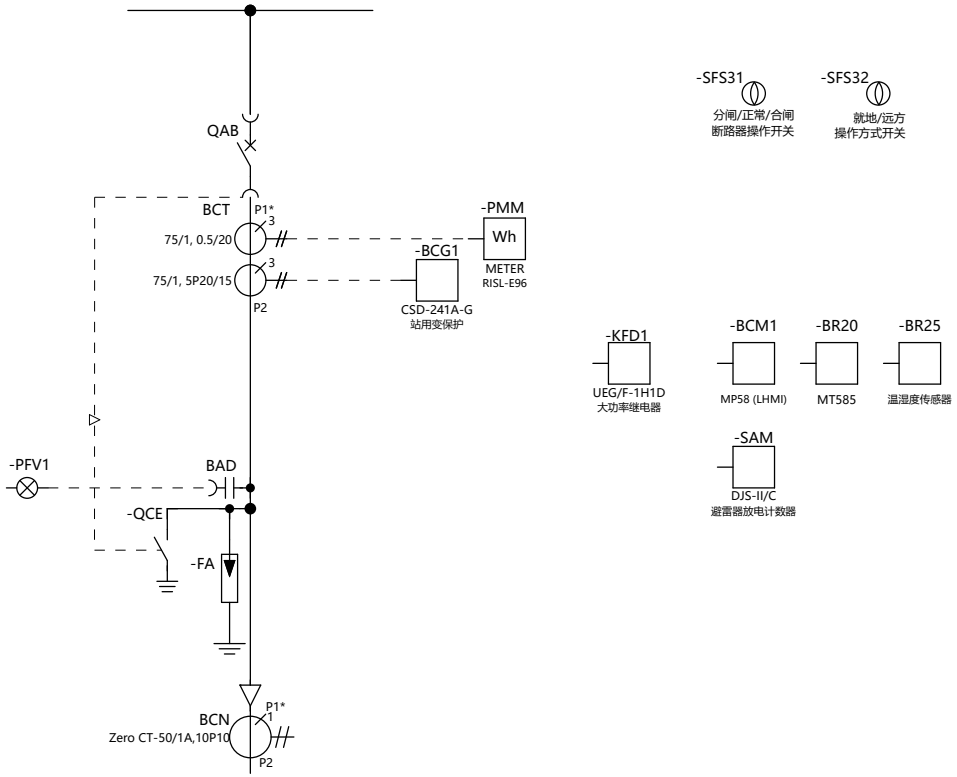

This drawing and information contained thereon is the property of ABB (XIAMEN) Switchgear CO. LTD. and shall not be used, reproduced for any purpose, or shown to third parties without the written consent of ABB (XIAMEN) Switchgear CO. LTD.

REV.	DESCRIPTION	REV. DATE

DRAWN	XINYU LIU	TITLE	单线图
CHECKED	Jianjun-Wang		
APPROVED	Yongsheng.Li	CONTRACT NO.:	504485024
FIRST DATE	2025/4/28		

FUNCTION: 接地变压器柜

PROJECT: 天津渤化永利丁辛醇项目

= FT2 | SHEET NO 1 | SCALE 1:1 | TOTAL PAGES 13

DRAWING NO XZS1-48353-A01-FT2-S

断路器弹簧储能电机回路	控制回路	保护与信号回路	加热器回路 电缆室 100W	电缆室照明	低压室照明

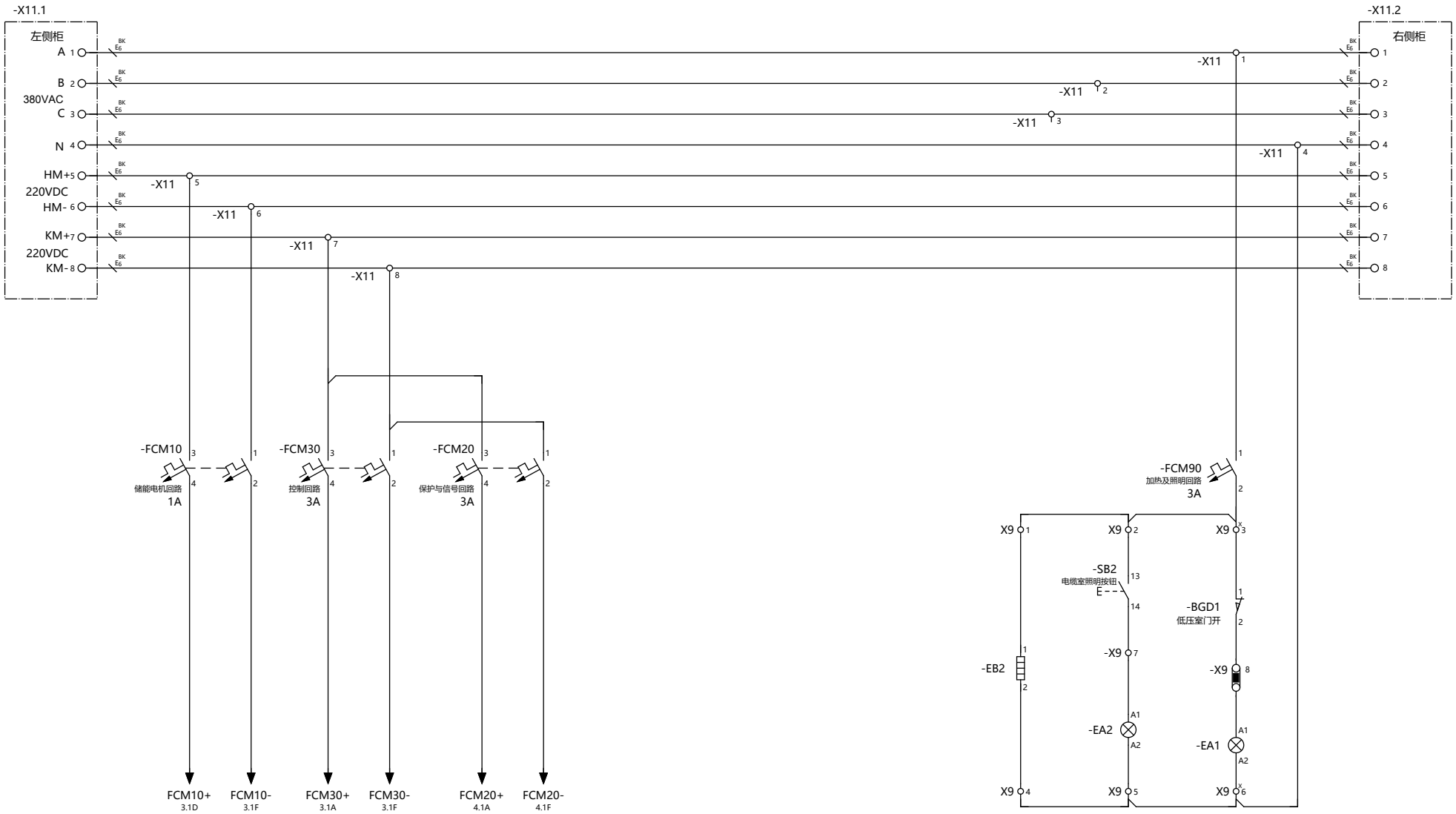

This drawing and information contained thereon is the property of ABB (XIAMEN) Switchgear CO. LTD. and shall not be used, reproduced for any purpose ,or shown to third parties without the written consent of ABB (XIAMEN) Switchgear CO. LTD.

REV.	DESCRIPTION	REV. DATE

DRAWN	XINYU LIU	TITLE	电源小母线回路
CHECKED	Jianjun-Wang		
APPROVED	Yongsheng.Li	CONTRACT NO.:	504485024
FIRST DATE	2025/4/28		

ABB

FUNCTION	接地变压器柜
PROJECT	天津渤化永利丁辛醇项目

= FT2	SHEET NO 2
SCALE 1:1	TOTAL PAGES 13
DRAWING NO	XZS1-48353-A01-FT2-S

断路器弹簧储能电机	已储能指示灯	断路器合闸回路				断路器分闸回路						保护操作电源	带电显示及其闭锁回路
		合闸闭锁	备用	就地合闸	远方合闸	远方分闸	就地分闸	永跳输入	备用	保护跳闸	备用		

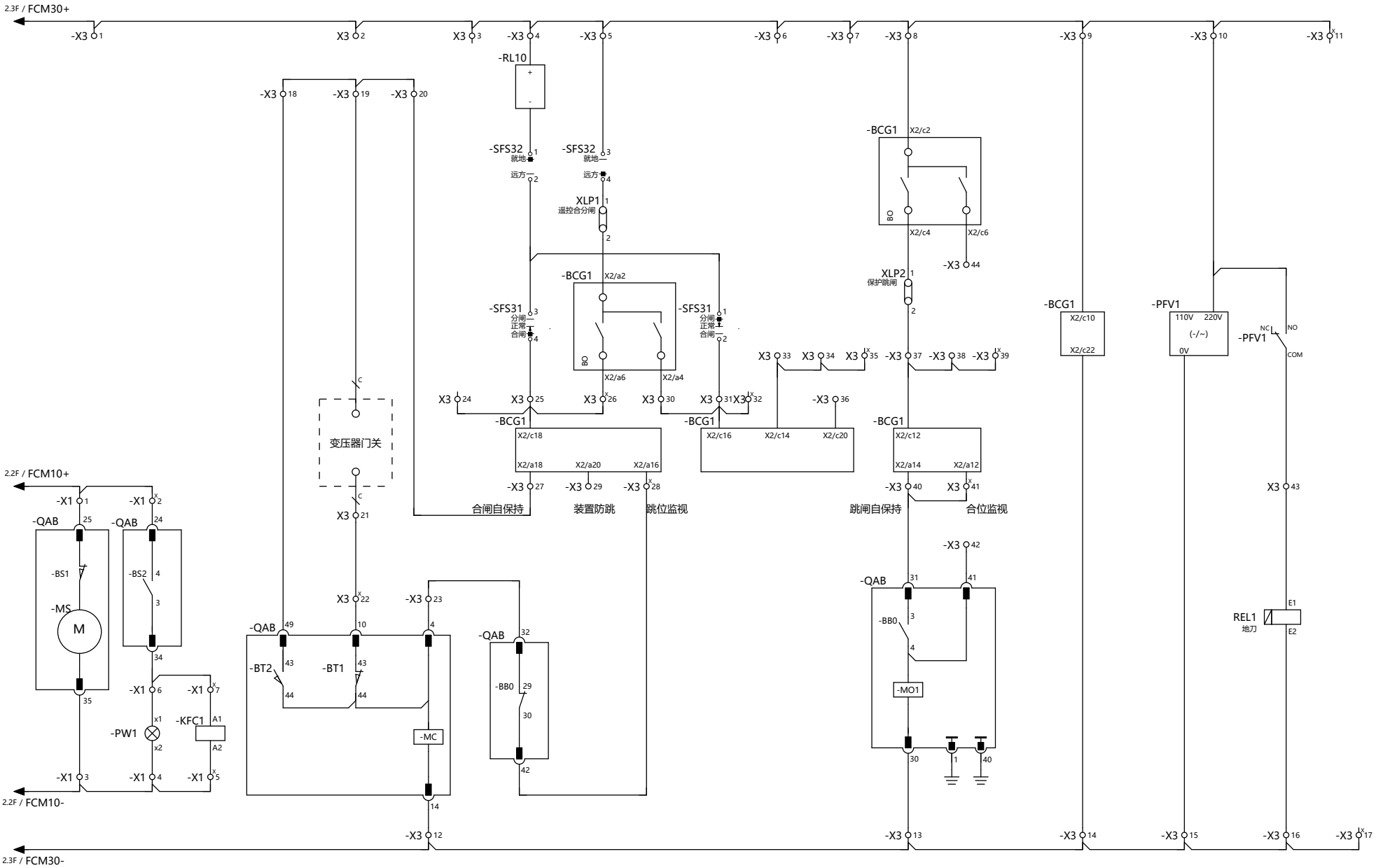

This drawing and information contained thereon is the property of ABB (XIAMEN) Switchgear CO. LTD. and shall not be used, reproduced for any purpose, or shown to third parties without the written consent of ABB (XIAMEN) Switchgear CO. LTD.

REV.	DESCRIPTION	REV. DATE

DRAWN	XINYU LIU	TITLE	控制回路
CHECKED	Jianjun-Wang		
APPROVED	Yongsheng.Li	CONTRACT NO.:	504485024
FIRST DATE	2025/4/28		

ABB

FUNCTION	接地变压器柜
PROJECT	天津渤化永利丁辛醇项目

= FT2	SHEET NO 3
SCALE 1:1	TOTAL PAGES 13
DRAWING NO	XZS1-48353-A01-FT2-S

断路器状态		断路器手车位置		接地开关状态		MT585电源	多功能表电源	避雷器计数器电源	保护装置辅助电源
合闸	分闸	工作	试验	合闸	分闸				

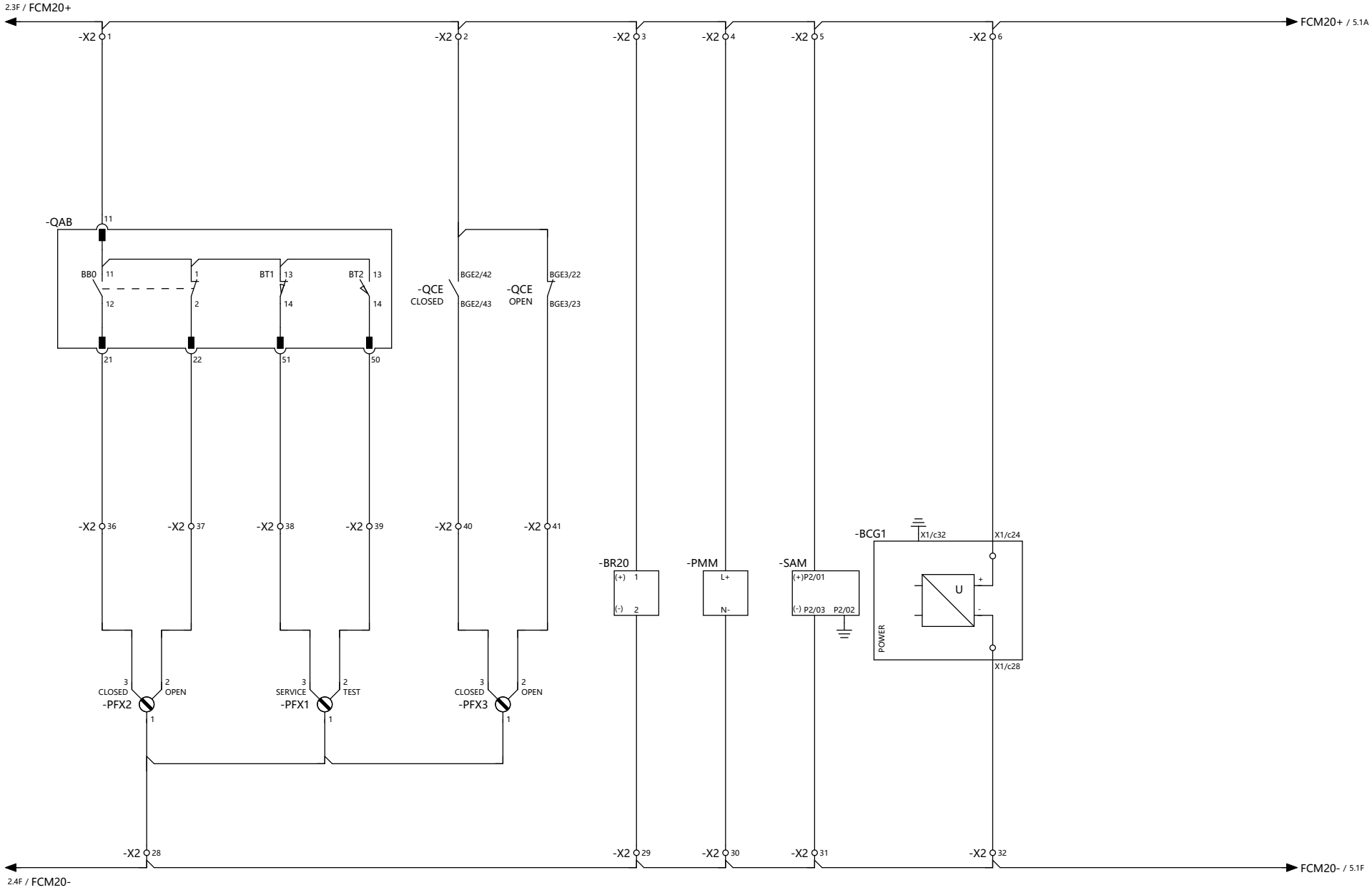

This drawing and information contained thereon is the property of ABB (XIAMEN) Switchgear CO. LTD. and shall not be used, reproduced for any purpose ,or shown to third parties without the written consent of ABB (XIAMEN) Switchgear CO. LTD.

REV.	DESCRIPTION	REV. DATE

DRAWN	XINYU LIU	TITLE	保护与信号回路
CHECKED	Jianjun-Wang		
APPROVED	Yongsheng.Li	CONTRACT NO.:	504485024
FIRST DATE	2025/4/28		

FUNCTION: 接地变压器柜

PROJECT: 天津渤化永利丁辛醇项目

= FT2 | SHEET NO 4 | SCALE 1:1 | TOTAL PAGES 13

DRAWING NO XZS1-48353-A01-FT2-S

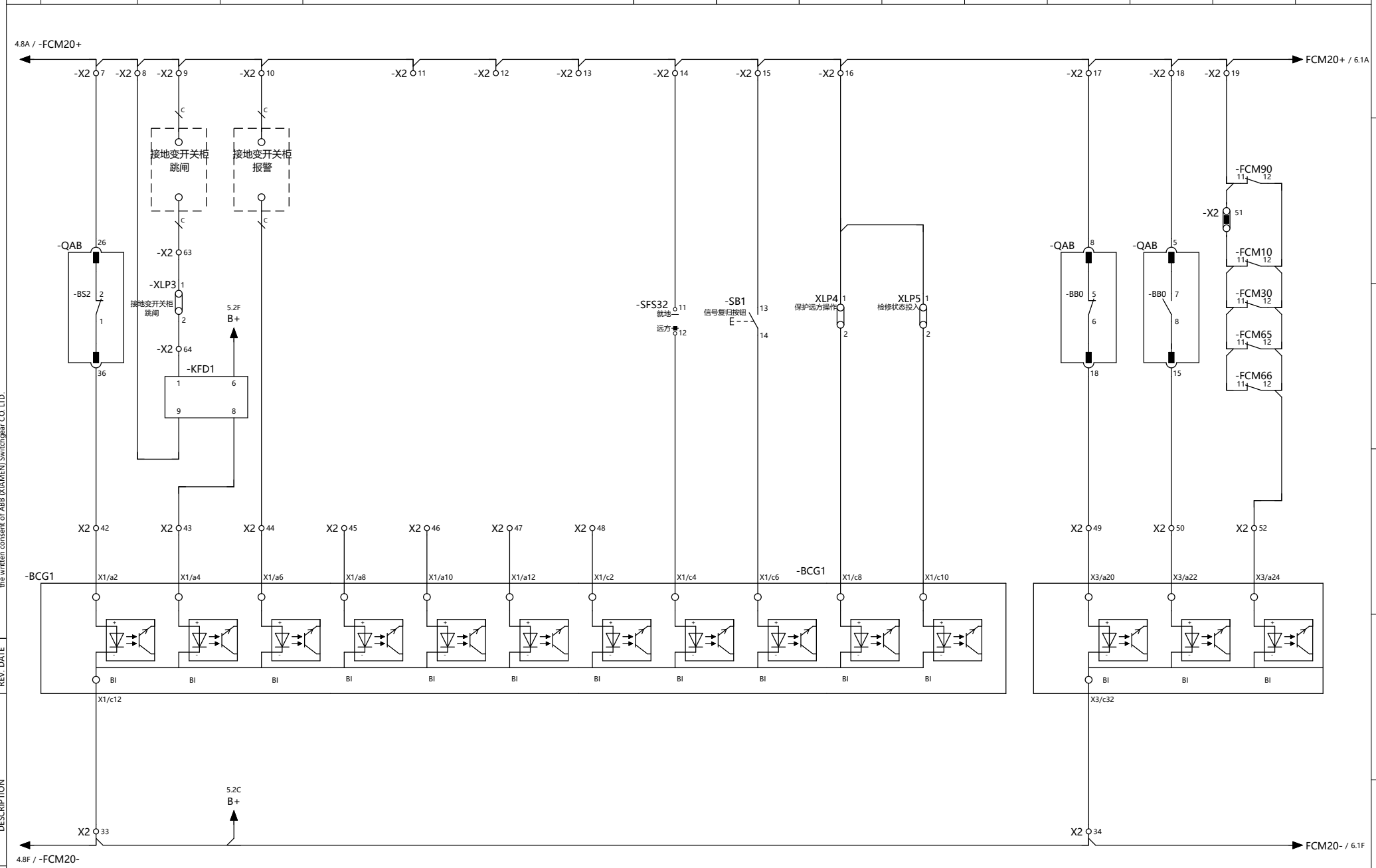

This drawing and information contained thereon is the property of ABB (XIAMEN) Switchgear CO. LTD. and shall not be used, reproduced for any purpose ,or shown to third parties without the written consent of ABB (XIAMEN) Switchgear CO. LTD.

REV.	DESCRIPTION	REV. DATE

DRAWN	XINYU LIU	TITLE	保护与信号回路
CHECKED	Jianjun-Wang		
APPROVED	Yongsheng.Li	CONTRACT NO.:	504485024
FIRST DATE	2025/4/28		

ABB

FUNCTION	接地变压器柜
PROJECT	天津渤化永利丁辛醇项目

=	FT2	SHEET NO	5
SCALE	1:1	TOTAL PAGES	13
DRAWING NO	XZS1-48353-A01-FT2-S		

断路器手车位置		接地开关状态		邻柜继保装置故障	变压器门开	备用
工作	试验	合闸	分闸			

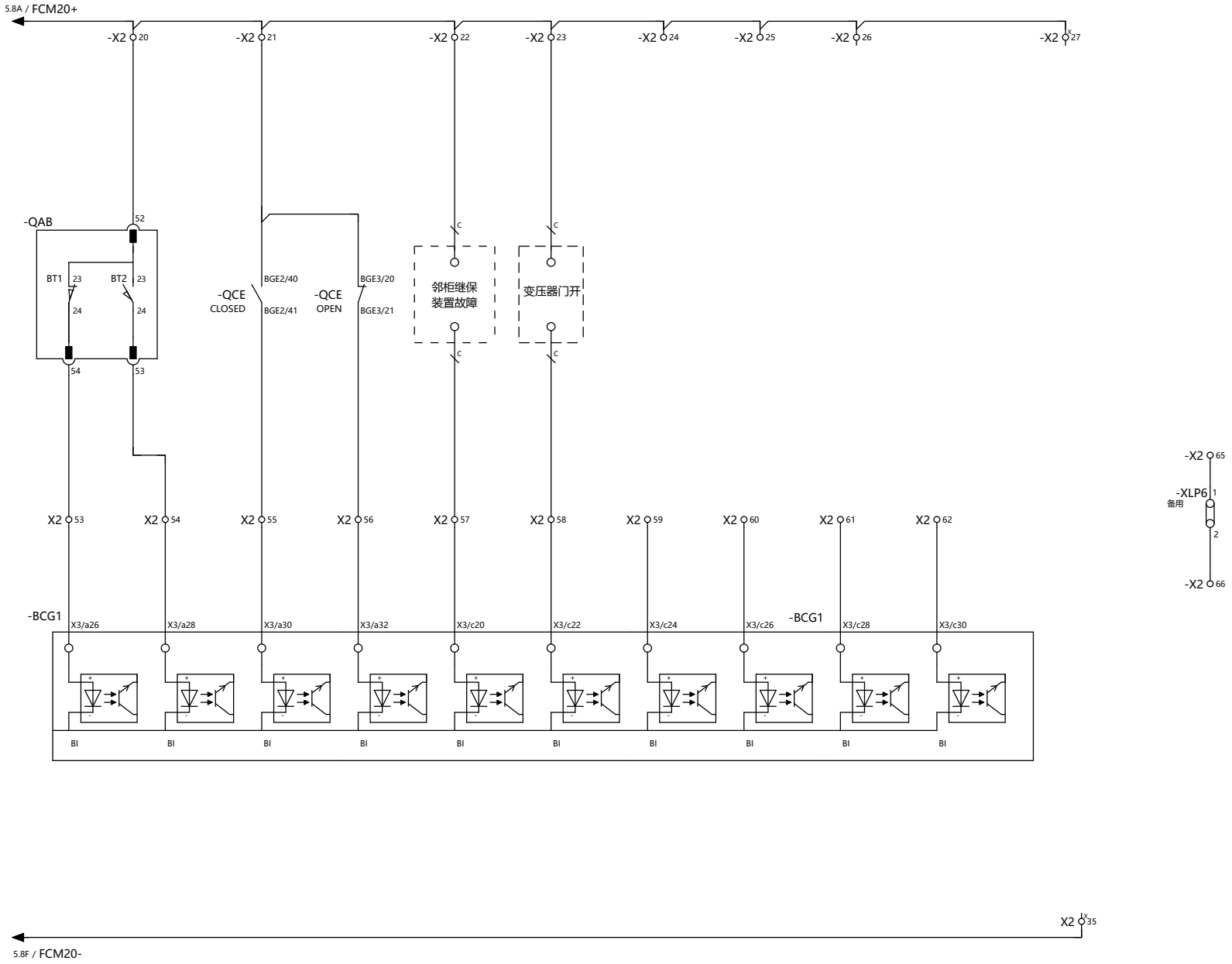

This drawing and information contained thereon is the property of ABB (XIAMEN) Switchgear CO. LTD. and shall not be used, reproduced for any purpose ,or shown to third parties without the written consent of ABB (XIAMEN) Switchgear CO. LTD.

REV.	DESCRIPTION	REV. DATE

DRAWN	XINYU LIU	TITLE	保护与信号回路
CHECKED	Jianjun-Wang		
APPROVED	Yongsheng.Li	CONTRACT NO.:	504485024
FIRST DATE	2025/4/28		

FUNCTION: 接地变压器柜

PROJECT: 天津渤化永利丁辛醇项目

= FT2 | SHEET NO 6
SCALE 1:1 | TOTAL PAGES 13
DRAWING NO XZS1-48353-A01-FT2-S

断路器已储能	断路器状态		断路器手车位置		接地开关状态		就地/远方选择开关位置	
	合闸	分闸	工作	试验	合闸	分闸	就地	远方

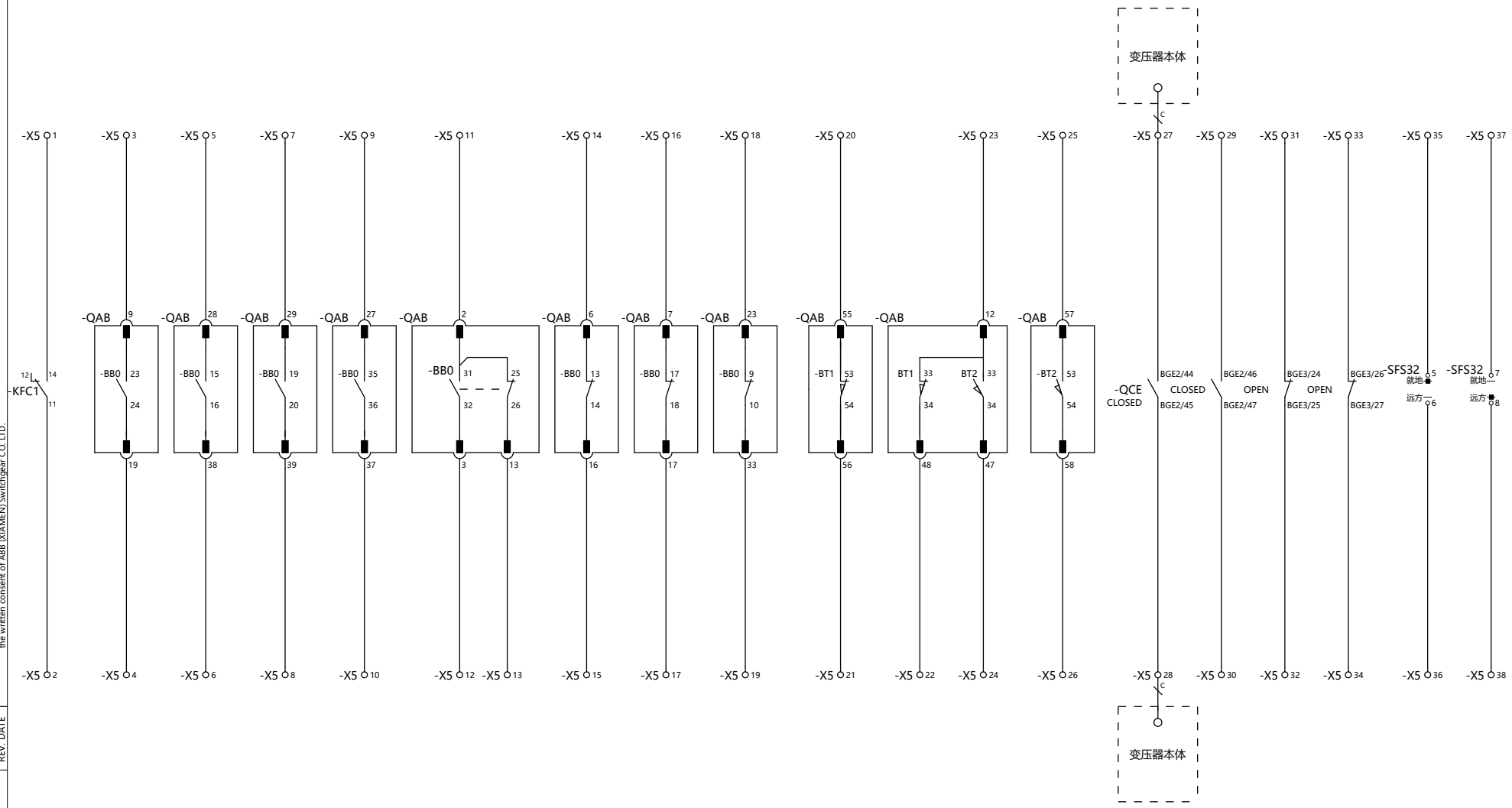

This drawing and information contained thereon is the property of ABB (XIAMEN) Switchgear CO. LTD. and shall not be used, reproduced for any purpose, or shown to third parties without the written consent of ABB (XIAMEN) Switchgear CO. LTD.

REV.	DESCRIPTION	REV. DATE

DRAWN	XINYU LIU	TITLE	备用回路
CHECKED	Jianjun-Wang		
APPROVED	Yongsheng.Li	CONTRACT NO.:	504485024
FIRST DATE	2025/4/28		

ABB

FUNCTION	接地变压器柜
PROJECT	天津渤化永利丁辛醇项目

=	FT2	SHEET NO	7
SCALE	1:1	TOTAL PAGES	13
DRAWING NO	XZS1-48353-A01-FT2-S		

保护空开信号	避雷器计数器报警信号	跳低压侧断路器-1	跳低侧分段-1	闭低侧分段-1	事故总信号	控制回路断线	非保持信号			
							备用	保护动作	运行异常告警	装置故障告警

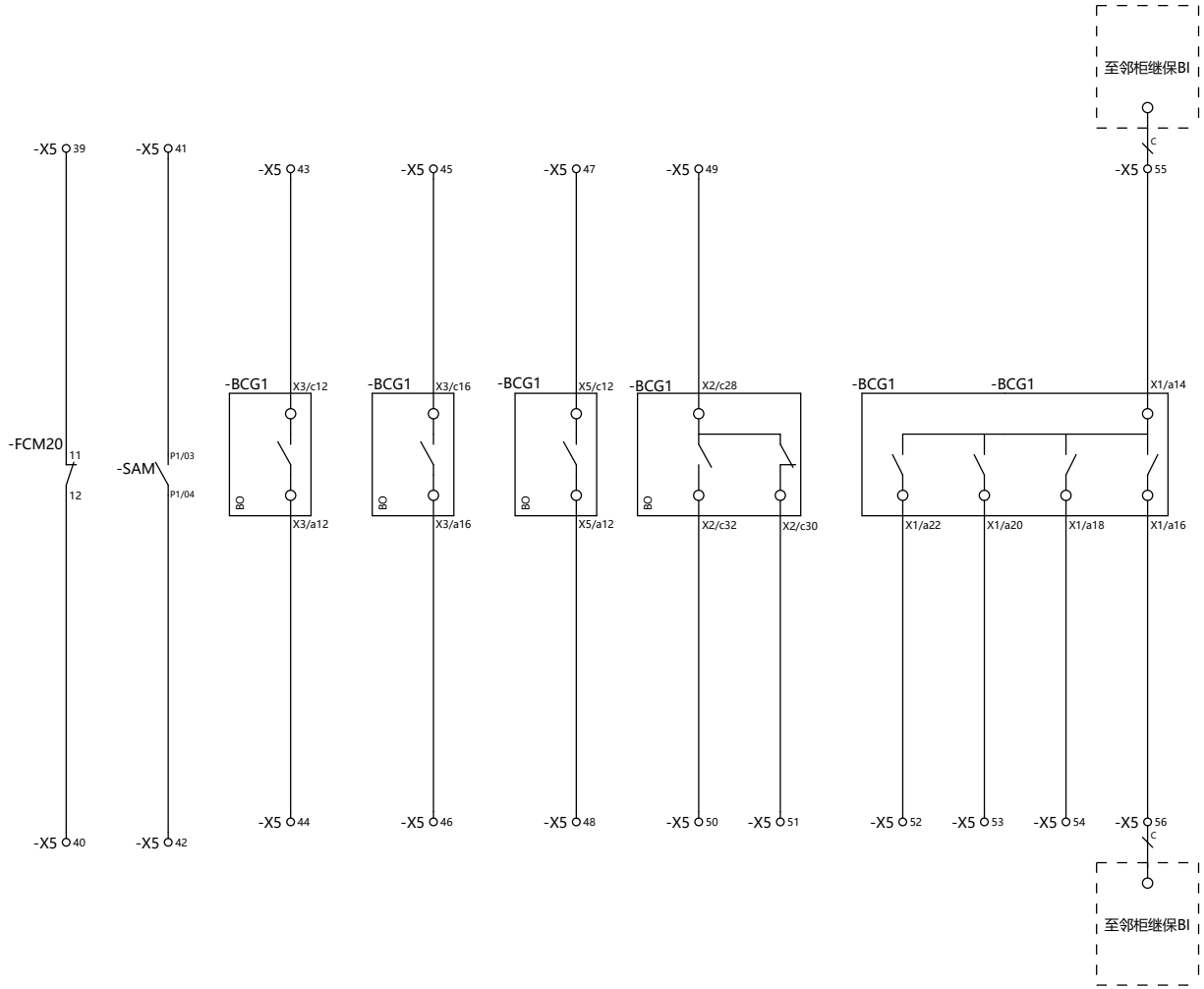

-X5 61 -X5 62 -X5 63 -X5 64 -X5 65

-X5 66 -X5 67 -X5 68 -X5 69 -X5 70

This drawing and information contained thereon is the property of ABB (XIAMEN) Switchgear CO. LTD. and shall not be used, reproduced for any purpose ,or shown to third parties without the written consent of ABB (XIAMEN) Switchgear CO. LTD.

REV.	DESCRIPTION	REV. DATE

DRAWN	XINYU LIU	TITLE	备用回路
CHECKED	Jianjun-Wang		
APPROVED	Yongsheng.Li	CONTRACT NO.:	504485024
FIRST DATE	2025/4/28		

ABB

FUNCTION	接地变压器柜
PROJECT	天津渤化永利丁辛醇项目

=	FT2	SHEET NO	8
SCALE	1:1	TOTAL PAGES	13
DRAWING NO	XZS1-48353-A01-FT2-S		

通讯小母线	保护对时口	避雷器计数器通讯	多功能表485通讯

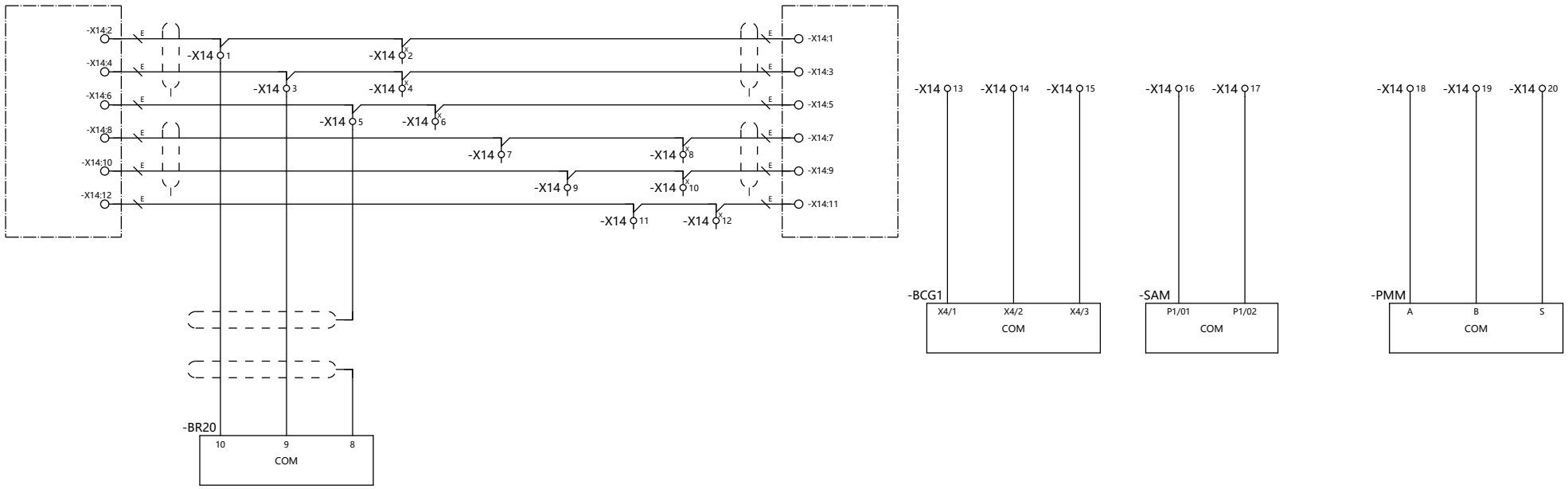

This drawing and information contained thereon is the property of ABB (XIAMEN) Switchgear CO. LTD. and shall not be used, reproduced for any purpose ,or shown to third parties without the written consent of ABB (XIAMEN) Switchgear CO. LTD.

REV.	DESCRIPTION	REV. DATE

DRAWN	XINYU LIU	TITLE	通信回路
CHECKED	Jianjun-Wang		
APPROVED	Yongsheng.Li	CONTRACT NO.:	504485024
FIRST DATE	2025/4/28		

FUNCTION: 接地变压器柜

PROJECT: 天津渤化永利丁辛醇项目

= FT2 | SHEET NO 9

SCALE 1:1 | TOTAL PAGES 13

DRAWING NO XZS1-48353-A01-FT2-S

MT585 24VDC输出	温湿度控制电源	MT585通讯接口 (与MB585通讯接口)	温湿度控制器通讯	HMI 电源及通讯 示意图

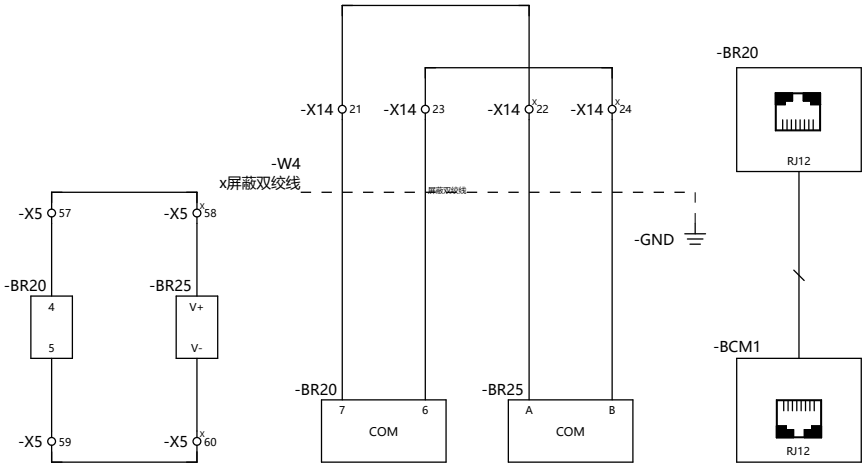

This drawing and information contained thereon is the property of ABB (XIAMEN) Switchgear CO. LTD. and shall not be used, reproduced for any purpose ,or shown to third parties without the written consent of ABB (XIAMEN) Switchgear CO. LTD.

REV.	DESCRIPTION	REV. DATE

DRAWN	XINYU LIU	TITLE	通信回路
CHECKED	Jianjun-Wang		
APPROVED	Yongsheng.Li	CONTRACT NO.:	504485024
FIRST DATE	2025/4/28		

FUNCTION: 接地变压器柜

PROJECT: 天津渤化永利丁辛醇项目

= FT2 | SHEET NO 10
SCALE 1:1 | TOTAL PAGES 13
DRAWING NO XZS1-48353-A01-FT2-S

电压小母线

计量小母线

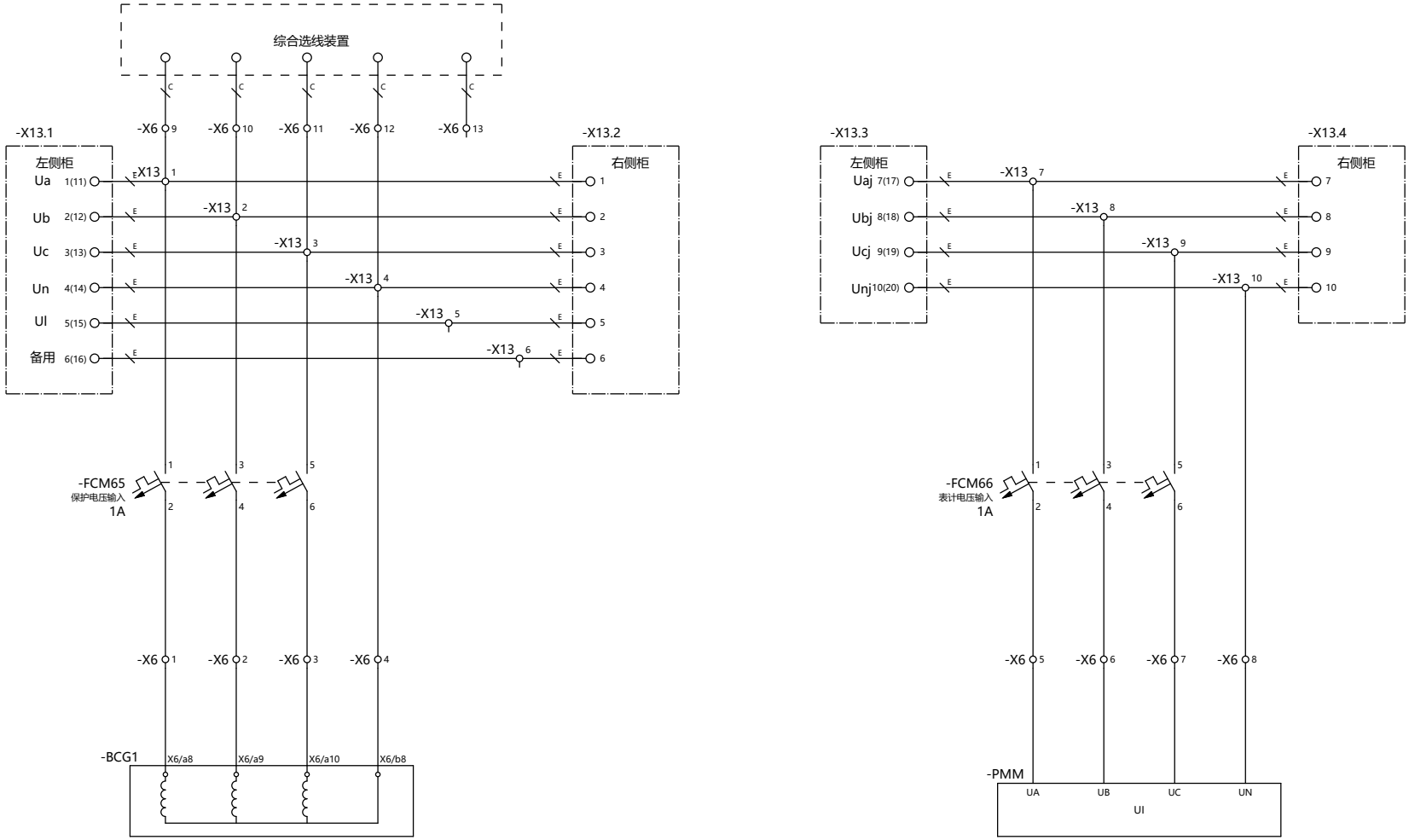

This drawing and information contained thereon is the property of ABB (XIAMEN) Switchgear CO. LTD. and shall not be used, reproduced for any purpose ,or shown to third parties without the written consent of ABB (XIAMEN) Switchgear CO. LTD.

REV.	DESCRIPTION	REV. DATE

DRAWN	XINYU LIU	TITLE	电压小母线
CHECKED	Jianjun-Wang		
APPROVED	Yongsheng.Li	CONTRACT NO.:	504485024
FIRST DATE	2025/4/28		

FUNCTION: 接地变压器柜

PROJECT: 天津渤化永利丁辛醇项目

= FT2 | SHEET NO 11

SCALE 1:1 | TOTAL PAGES 13

DRAWING NO XZS1-48353-A01-FT2-S

测量电流输入	保护电流输入	零序电流输入	低压侧零序电流输入

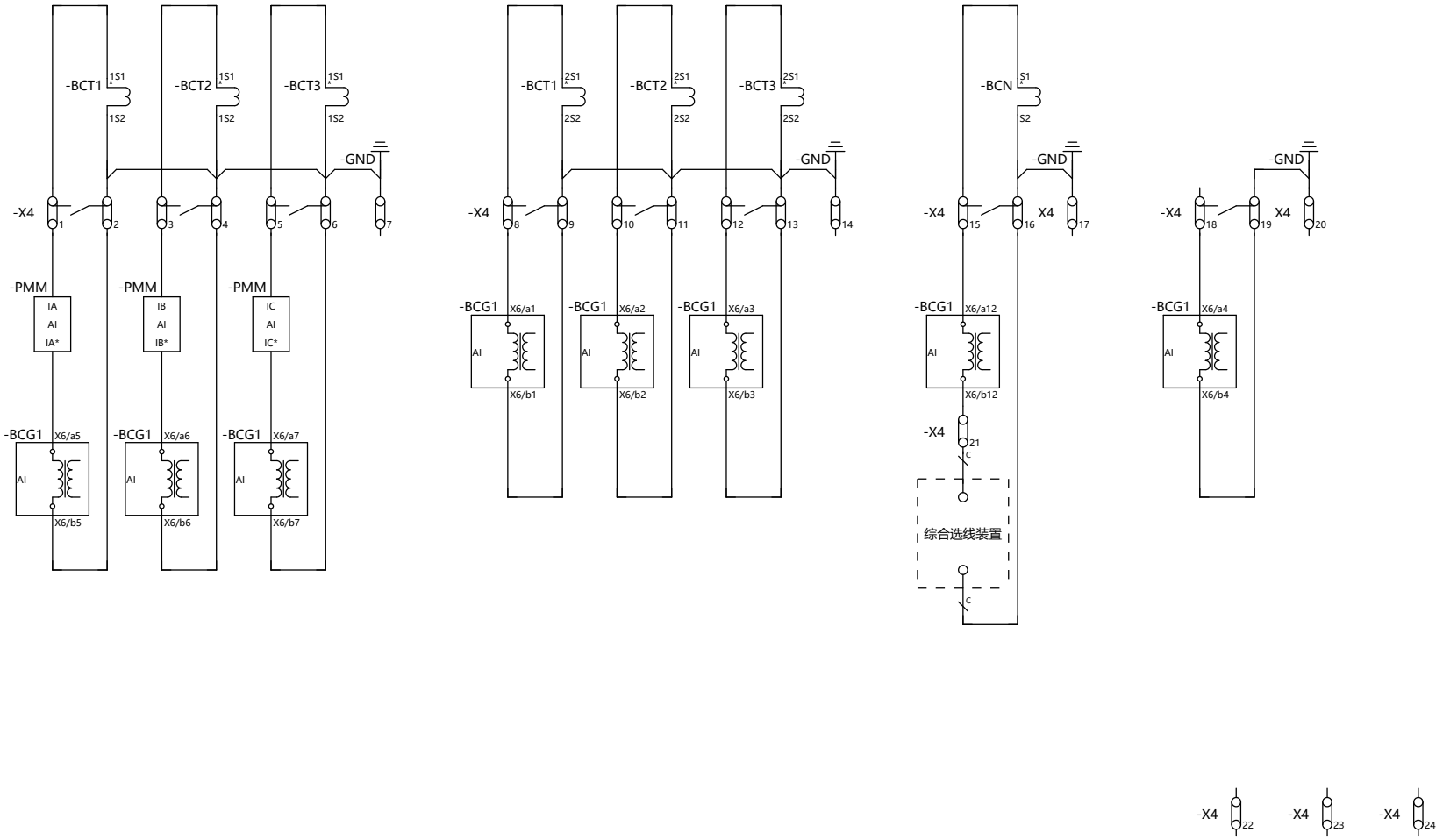

This drawing and information contained thereon is the property of ABB (XIAMEN) Switchgear CO. LTD. and shall not be used, reproduced for any purpose ,or shown to third parties without the written consent of ABB (XIAMEN) Switchgear CO. LTD.

REV.	DESCRIPTION	REV. DATE

DRAWN	XINYU LIU	TITLE	电流回路
CHECKED	Jianjun-Wang		
APPROVED	Yongsheng.Li	CONTRACT NO.:	504485024
FIRST DATE	2025/4/28		

FUNCTION: 接地变压器柜

PROJECT: 天津渤化永利丁辛醇项目

= FT2 | SHEET NO 12 | SCALE 1:1 | TOTAL PAGES 13

DRAWING NO XZS1-48353-A01-FT2-S

VD4

-QAB

VD4/P-77

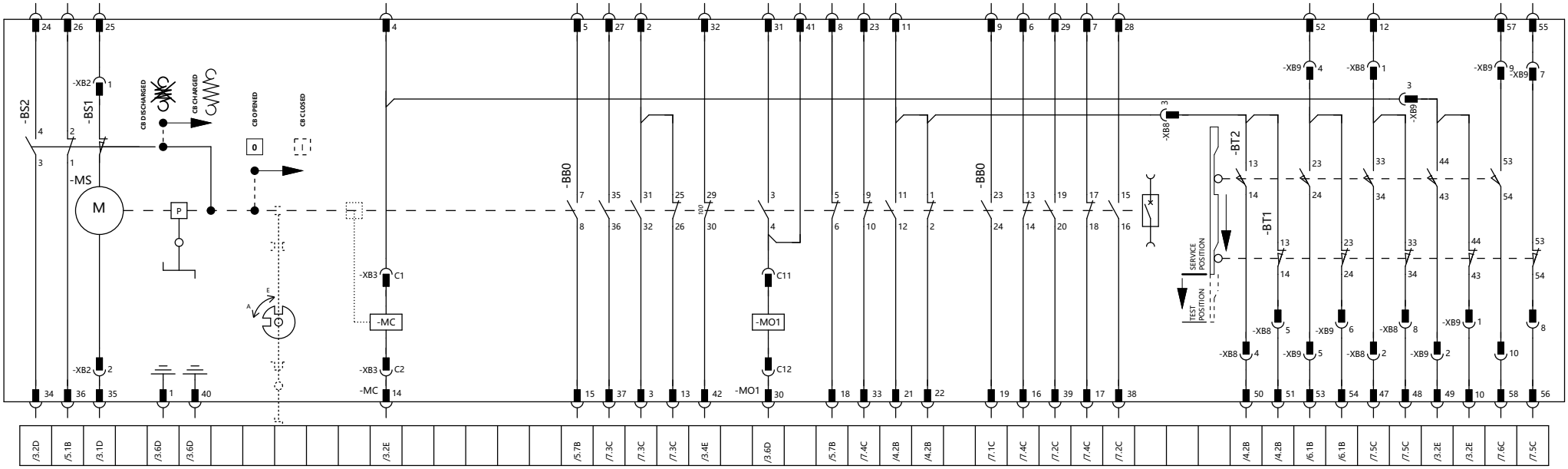

名称	描述	备注
-BS1	储能电机限位开关	
-MS	弹簧操作机构储能电机	
-MC	合闸脱扣器	
-MO1	第一分闸脱扣器	

名称	描述	备注
-BS2	合闸弹簧储能/未储能信号触点	
-BB0	与断路器主轴联动的辅助开关	
-BT1	限位开关(手车位于运行位置)	
-BT2	限位开关(手车位于试验位置)	

接地开关与断路器手车具有可靠的机械闭锁： A)
只有当断路器手车位于试验位置时，才允许操作接地开关 B)
只有当接地开关处于分状态时,断路器手车才允许由试验位置推入运行位置。

电气控制接线图/接点位置参考：
此图所示状态为：断路器手车工作位置 断路器处于分闸状态 操作机构弹簧未储能

This drawing and information contained thereon is the property of ABB (XIAMEN) Switchgear CO. LTD. and shall not be used, reproduced for any purpose, or shown to third parties without the written consent of ABB (XIAMEN) Switchgear CO. LTD.

REV.	DESCRIPTION	REV. DATE

DRAWN	XINYU LIU	TITLE	断路器接线图
CHECKED	Jianjun-Wang		
APPROVED	Yongsheng.Li	CONTRACT NO.:	504485024
FIRST DATE	2025/4/28		

FUNCTION: 接地变压器柜

PROJECT: 天津渤化永利丁辛醇项目

= FT2 | SHEET NO 13 | SCALE 1:1 | TOTAL PAGES 13

DRAWING NO XZS1-48353-A01-FT2-S

设备清单(柜体)

序号	设备号	设备名称	物料号	数量	制造商	型号	设备参数
1	-BAD	电容分压装置	DIK-06-B06N1000C-1	3	/	B06N-1000C-1	Un=6kV
2	-BCN	零序电流互感器	CTZ-GLMZ2150501-A1	1	ABB	LMZ215-80-120	50/1A,CORE:2VA/10P10,120mm
3	-BCT1	电流互感器	CTA-G2K311-0841	1	ABB	LZZBJ9-12/150b/4	31.5KA/1SEC,75/1A,C1:0.5/20VA;C2:5P20/15VA;
4	-BCT2	电流互感器	CTA-G2K311-0841	1	ABB	LZZBJ9-12/150b/4	31.5KA/1SEC,75/1A,C1:0.5/20VA;C2:5P20/15VA;
5	-BCT3	电流互感器	CTA-G2K311-0841	1	ABB	LZZBJ9-12/150b/4	31.5KA/1SEC,75/1A,C1:0.5/20VA;C2:5P20/15VA;
6	-EA2	LED电缆室照明灯	L-CL10-1C-W-AA-CA	1	PEAKS	CL10-1C-W-AA	AC198-242V
7	-EB2	加热器	EP-HEATER-100W	1	SANYANG	1FZEK833B	100W
8	-FA	避雷器	SAS-YH5WZ-10/27-1	3	西安神电	YH5WZ-10/27	额定电压:10KV;持续运行电压:8.0KV;雷电冲击残压:27KV(8/20US 5KA);2ms方波通流容量:400A
9	-QAB	真空断路器	VD4/P-77	1	ABB	VD4	NEW VD4 P(旋转式辅助开关) WITHOUT RL1 WITH 7NO+7NC WITHOUT MT
10	-QCE	接地开关	ET1-BGE2/3	1	ABB	ET1	ET1 WITH BGE2&BGE3
11	-REL1	闭锁电磁铁	EP-MAGNET	1	PEAKS	EM10-S	/

This drawing and information contained thereon is the property of ABB (XIAMEN) Switchgear CO. LTD. and shall not be used, reproduced for any purpose ,or shown to third parties without the written consent of ABB (XIAMEN) Switchgear CO. LTD.

REV.	DESCRIPTION	REV. DATE

DRAWN	XINYU LIU	TITLE	设备清单(柜体)
CHECKED	Jianjun-Wang		
APPROVED	Yongsheng.Li	CONTRACT NO.:	504485024
FIRST DATE	2025/4/28		

FUNCTION: 接地变压器柜

PROJECT: 天津渤化永利丁辛醇项目

= FT2 | SHEET NO 1

SCALE 1:1 | TOTAL PAGES 3

DRAWING NO XZS1-48353-A01-FT2-E

设备清单(低压室面板)

序号	设备号	设备名称	物料号	数量	制造商	型号	设备参数
1	-BCG1	变压器保护	CS-BHYL-02	1	北京四方继保自动化股份有限公司	CSD-241A-G	装置电源：DC220V;电流输入：1A;电压输入：AC100V;
2	-BCM1	就地显示器	RLY-MP58	1	ABB	MP58 （LHMI）	/
3	-PFV1	强制型带电显示器	VIO-DXN-Q-A10-1	1	LEELEN	DXN-Q	DXN-Q 强制型带电显示器UGZS1 3KV/6KV/10kV，辅助电源：AC/DC 220/110V
4	-PFX1	手车位置指示	PIL-ADWZ25-B/2	1	LEELEN	ADWZ25-B/2	98-242V AC/DC,TRUCK POSITION
5	-PFX2	断路器状态指示	PIL-ADWZ25-K/2	1	LEELEN	ADWZ25-K/2	98-242V AC/DC,CB. STATUS
6	-PFX3	接地开关状态指示	PIL-ADWZ25-E/1	1	LEELEN	ADWZ25-E/1	98-242V AC/DC,EARTHING SWITCH STATUS
7	-PMM	多功能表	CS-BHYL-09	1	川泽电气	RISL-E96-5A-N-N-N-N	装置电源：DC220V ;电流输入：1A;电压输入：AC100V
8	-PW1	白色指示灯	LSA-CL2-520C	1	ABB	CL2-520C	Un=220V DC,WHITE
9	-RL10	五防锁	CS-BHYL-08	1	珠海优特电力科技股份有限公司	DNBS-2J	/
10	-SAM	高灵敏避雷器放电计数器	SAK-DJSII-C-11	1	安徽通辰	DJS-II/C	Un=110~220DC/AC 4.5m;3m
11	-SB1	黑色按钮	PBA-CP1-10B-11	1	ABB	CP1-10B-11	1NO+1NC,不带标牌套
12	-SB2	黑色自锁按钮	PBA-CP2-10B-11	1	ABB	CP2-10B-11	1NO+1NC,不带标牌套
13	-SFS31	选择开关	SSJ-E01-2-401	1	JIANGYIN CHANGJIANG	LW38D-164B0339/2PY-DAN-AX	
14	-SFS32	选择开关	SSJ-E02-4-402	1	JIANGYIN CHANGJIANG	LW38D-164N1257/4P-AX	
15	-XLP1	插拔式压板	T-JY3-2	1	UPUN	JY3-2	驼色
16	-XLP2	插拔式压板	T-JY3-2	1	UPUN	JY3-2	驼色
17	-XLP3	插拔式压板	T-JY3-2	1	UPUN	JY3-2	驼色
18	-XLP4	插拔式压板	T-JY3-2	1	UPUN	JY3-2	驼色
19	-XLP5	插拔式压板	T-JY3-2	1	UPUN	JY3-2	驼色
20	-XLP6	插拔式压板	T-JY3-2	1	UPUN	JY3-2	驼色

This drawing and information contained thereon is the property of ABB (XIAMEN) Switchgear CO. LTD. and shall not be used, reproduced for any purpose ,or shown to third parties without the written consent of ABB (XIAMEN) Switchgear CO. LTD.

REV.	DESCRIPTION	REV. DATE

DRAWN	XINYU LIU	TITLE	设备清单(低压室面板)
CHECKED	Jianjun-Wang		
APPROVED	Yongsheng.Li	CONTRACT NO.:	504485024
FIRST DATE	2025/4/28		

FUNCTION 接地变压器柜

PROJECT 天津渤化永利丁辛醇项目

= FT2 | SHEET NO 2

SCALE 1:1 | TOTAL PAGES 3

DRAWING NO XZS1-48353-A01-FT2-E

设备清单(低压室)

序号	设备号	设备名称	物料号	数量	制造商	型号	设备参数
1	-BGD1	微动开关	EP-LVMS	1	PEAKS	TS11-001-01	MECHANICAL LIFE TIME>1000000TIMES
2	-BR20	TEMPERATURE MONITOR	RLY-MT585	1	ABB	MT585	100-240VDC/AC
3	-BR25	Humidity & Temperature Sensor	1YHT010000P0009	1	/	/	/
4	-EA1	LED低压室照明灯	L-CL10-1C-W-AA	1	PEAKS	CL10-1C-W-AA	SUPPLY: AC198~242V; POWER: <4W
5	-FCM10	微型空气开关	MCBA-202M-C1DC;MBDA-S2C-H11R	1;1	ABB	S202M-C1DC;S2C-H11R	Un=440V DC,In=1A,2-POLE
6	-FCM20	微型空气开关	MCBA-202M-C3DC;MBDA-S2C-H11R	1;1	ABB	S202M-C3DC;S2C-H11R	Un=440V DC,In=3A,2-POLE
7	-FCM30	微型空气开关	MCBA-202M-C3DC;MBDA-S2C-H11R	1;1	ABB	S202M-C3DC;S2C-H11R	Un=440V DC,In=3A,2-POLE
8	-FCM65	微型空气开关	MCBA-2030001R0014;MBDA-S2C-H11R	1;1	ABB	S203-C1;S2C-H11R	Un=400V AC,In=1A,3-POLE
9	-FCM66	微型空气开关	MCBA-2030001R0014;MBDA-S2C-H11R	1;1	ABB	S203-C1;S2C-H11R	Un=400V AC,In=1A,3-POLE
10	-FCM90	微型空气开关	MCBA-2010001R0034;MBDA-S2C-H11R	1;1	ABB	S201-C3;S2C-H11R	Un=230V AC,In=3A,1-POLE
11	-KFC1	中间继电器	RLY-CRMX220DC4	1	ABB	CRMX220DC4	CR-MX220DC4,UN=220V DC
12	-KFD1	轨道继电器	CS-504485024-01	1	北京四方	CSN-11	/

This drawing and information contained thereon is the property of ABB (XIAMEN) Switchgear CO. LTD. and shall not be used, reproduced for any purpose ,or shown to third parties without the written consent of ABB (XIAMEN) Switchgear CO. LTD.

REV.	DESCRIPTION	REV. DATE

DRAWN	XINYU LIU	
CHECKED	Jianjun-Wang	
APPROVED	Yongsheng.Li	
FIRST DATE	2025/4/28	

TITLE 设备清单(低压室)

CONTRACT NO.: 504485024

FUNCTION 接地变压器柜

PROJECT 天津渤化永利丁辛醇项目

= FT2 | SHEET NO 3

SCALE 1:1 | TOTAL PAGES 3

DRAWING NO XZS1-48353-A01-FT2-E

REV.	DESCRIPTION	REV. DATE

This drawing and information contained thereon is the property of ABB (XIAMEN) Switchgear CO. LTD. and shall not be used, reproduced for any purpose ,or shown to third parties without the written consent of ABB (XIAMEN) Switchgear CO. LTD.

==A01=FT2+-X1

备注	外引电缆	设备	线号	端子号	型号	线号	设备	外引电缆	备注
		-FCM10:4		1	NEK4		-QAB:25		
				2	NEK4		-QAB:24		
		-FCM10:2		3	NEK4		-QAB:35		
				4	NEK4		-PW1:x2		
				5	NEK4		-KFC1:A2		
		-QAB:34		6	NEK4		-PW1:x1		
				7	NEK4		-KFC1:A1		

☆ 柜间小母线,随柜提供

△ 柜间控制电路(由客户自备)

短接排

分隔板

(测试短接片

O 其他

REV.	DESCRIPTION	REV. DATE

DRAWN	XINYU LIU	
CHECKED	Jianjun-Wang	
APPROVED	Yongsheng.Li	
FIRST DATE	2025/4/28	

TITLE: 端子图表 ==A01=FT2+-X1

CONTRACT NO.: 504485024

FUNCTION: 接地变压器柜

PROJECT: 天津渤化永利丁辛醇项目

=	FT2
SCALE	1:1
DRAWING NO.	XZS1-48353-A01-FT2-T
SHEET NO.	1
TOTAL PAGES	12

REV.	DESCRIPTION	REV. DATE

This drawing and information contained thereon is the property of ABB (XIAMEN) Switchgear CO. LTD. and shall not be used, reproduced for any purpose ,or shown to third parties without the written consent of ABB (XIAMEN) Switchgear CO. LTD.

==A01=FT2+-X2

备注	外引电缆	设备	线号	端子号	型号	线号	设备	外引电缆	备注
		-FCM20:4		1	NEK4		-QAB:11		
				2	NEK4		-QCE:BGE2/42		
				3	NEK4		-BR20:1		
				4	NEK4		-PMM:L+		
				5	NEK4		-SAM:P2/01		
				6	NEK4		-BCG1:X1/c24		
				7	NEK4		-QAB:26		
				8	NEK4		-KFD1:9		
	△	-接地变开关柜跳闸		9	NEK4				
	△	-接地变开关柜报警		10	NEK4				
				11	NEK4				
				12	NEK4				
				13	NEK4				
				14	NEK4		-SFS32:11		
				15	NEK4		-SB1:13		
				16	NEK4		-XLP4:1		
				17	NEK4		-QAB:8		
				18	NEK4		-QAB:5		
				19	NEK4		-FCM90:11		
				20	NEK4		-QAB:52		
				21	NEK4		-QCE:BGE2/40		
	△	-邻柜继保装置故障		22	NEK4				
	△	-变压器门开		23	NEK4				
				24	NEK4				
				25	NEK4				
				26	NEK4				
				27	NEK4				
		-FCM20:2		28	NEK4		-PFX2:1		
				29	NEK4		-BR20:2		
				30	NEK4		-PMM:N-		
				31	NEK4		-SAM:P2/03		
				32	NEK4		-BCG1:X1/c28		
		-KFD1:6		33	NEK4		-BCG1:X1/c12		
				34	NEK4		-BCG1:X3/c32		
				35	NEK4				
		-QAB:21		36	NEK4		-PFX2:3		
		-QAB:22		37	NEK4		-PFX2:2		
		-QAB:51		38	NEK4		-PFX1:3		
		-QAB:50		39	NEK4		-PFX1:2		
		-QCE:BGE2/43		40	NEK4		-PFX3:3		
		-QCE:BGE3/23		41	NEK4		-PFX3:2		
		-QAB:36		42	NEK4		-BCG1:X1/a2		
		-KFD1:8		43	NEK4		-BCG1:X1/a4		
	△	-接地变开关柜报警		44	NEK4		-BCG1:X1/a6		
				45	NEK4		-BCG1:X1/a8		
				46	NEK4		-BCG1:X1/a10		
				47	NEK4		-BCG1:X1/a12		
				48	NEK4		-BCG1:X1/c2		
		-QAB:18		49	NEK4		-BCG1:X3/a20		
		-QAB:15		50	NEK4		-BCG1:X3/a22		
		-FCM10:11		51	RCT4SW		-FCM90:11		
		-FCM66:12		52	NEK4		-BCG1:X3/a24		
		-QAB:54		53	NEK4		-BCG1:X3/a26		
		-QAB:53		54	NEK4		-BCG1:X3/a28		

☆ 柜间小母线,随柜提供

△ 柜间控制电路(由客户自备)

短接排

✕ 分隔板

(测试短接片

O 其他

DRAWN	XINYU LIU
CHECKED	Jianjun-Wang
APPROVED	YongshengLi
FIRST DATE	2025/4/28
REV. DATE	
REV.	
DESCRIPTION	

TITLE: 端子图表 ==A01=FT2+-X2

CONTRACT NO.: 504485024

FUNCTION: 接地变压器柜

PROJECT: 天津渤化永利丁辛醇项目

=	FT2
SCALE	1:1
SHEET NO.	2
TOTAL PAGES	12
DRAWING NO.	XZS1-48353-A01-FT2-T

REV.	DESCRIPTION	REV. DATE

This drawing and information contained thereon is the property of ABB (XIAMEN) Switchgear CO. LTD. and shall not be used, reproduced for any purpose ,or shown to third parties without the written consent of ABB (XIAMEN) Switchgear CO. LTD.

==A01=FT2+-X2

备注	外引电缆	设备	线号	端子号	型号	线号	设备	外引电缆	备注
		-QCE:BGE2/41		55	NEK4		-BCG1:X3/a30		
		-QCE:BGE3/21		56	NEK4		-BCG1:X3/a32		
	△	-邻柜继保装置故障		57	NEK4		-BCG1:X3/c20		
	△	-变压器门开		58	NEK4		-BCG1:X3/c22		
				59	NEK4		-BCG1:X3/c24		
				60	NEK4		-BCG1:X3/c26		
				61	NEK4		-BCG1:X3/c28		
				62	NEK4		-BCG1:X3/c30		
	△	-接地变开关柜跳闸		63	NEK4		-XLP3:1		
		-XLP3:2		64	NEK4		-KFD1:1		
				65	NEK4		-XLP6:1		
				66	NEK4		-XLP6:2		

☆ 柜间小母线,随柜提供

△ 柜间控制电路(由客户自备)

短接排

分隔板

(测试短接片

O 其他

REV.	DESCRIPTION	REV. DATE

DRAWN	XINYU LIU	TITLE
CHECKED	Jianjun-Wang	端子图表 ==A01=FT2+-X2
APPROVED	Yongsheng.Li	CONTRACT NO.:
FIRST DATE	2025/4/28	504485024

FUNCTION 接地变压器柜

PROJECT 天津渤化永利丁辛醇项目

=	FT2	SCALE 1:1	SHEET NO. 2.a
DRAWING NO. XZS1-48353-A01-FT2-T			TOTAL PAGES 12

REV.	DESCRIPTION	REV. DATE

This drawing and information contained thereon is the property of ABB (XIAMEN) Switchgear CO. LTD. and shall not be used, reproduced for any purpose ,or shown to third parties without the written consent of ABB (XIAMEN) Switchgear CO. LTD.

==A01=FT2+-X3

备注	外引电缆	设备	线号	端子号	型号	线号	设备	外引电缆	备注
				1	NEK4		-FCM30:4		
				2	NEK4				
				3	NEK4				
				4	NEK4		-RL10:+		
				5	NEK4		-SFS32:3		
				6	NEK4				
				7	NEK4				
				8	NEK4		-BCG1:X2/c2		
				9	NEK4		-BCG1:X2/c10		
				10	NEK4		-PFV1:220V		
				11	NEK4				
		-FCM30:2		12	NEK4		-QAB:14		
				13	NEK4		-QAB:30		
				14	NEK4		-BCG1:X2/c22		
				15	NEK4		-PFV1:0V		
				16	NEK4		-REL1:E2		
				17	NEK4				
				18	NEK4		-QAB:49		
	△	-变压器门关		19	NEK4				
				20	NEK4		-X3:27		
	△	-变压器门关		21	NEK4				
				22	NEK4		-QAB:10		
		-QAB:32		23	NEK4		-QAB:4		
				24	NEK4				
		-BCG1:X2/c18		25	NEK4		-SFS31:4		
				26	NEK4		-BCG1:X2/a6		
		-X3:20		27	NEK4		-BCG1:X2/a18		
		-QAB:42		28	NEK4		-BCG1:X2/a16		
				29	NEK4		-BCG1:X2/a20		
				30	NEK4		-BCG1:X2/a4		
		-SFS31:2		31	NEK4		-BCG1:X2/c16		
				32	NEK4				
				33	NEK4		-BCG1:X2/c14		
				34	NEK4				
				35	NEK4				
				36	NEK4		-BCG1:X2/c20		
		-BCG1:X2/c12		37	NEK4		-XLP2:2		
				38	NEK4				
				39	NEK4				
		-QAB:31		40	NEK4		-BCG1:X2/a14		
				41	NEK4		-BCG1:X2/a12		
				42	NEK4		-QAB:41		
		-PFV1:COM		43	NEK4		-REL1:E1		
				44	NEK4		-BCG1:X2/c6		

☆ 柜间小母线,随柜提供

△ 柜间控制电路(由客户自备)

短接排

✕ 分隔板

(测试短接片

O 其他

REV.	DESCRIPTION	REV. DATE
DRAWN	XINYU LIU	
CHECKED	Jianjun-Wang	
APPROVED	Yongsheng.Li	
FIRST DATE	2025/4/28	

TITLE: 端子图表 ==A01=FT2+-X3

CONTRACT NO.: 504485024

FUNCTION: 接地变压器柜

PROJECT: 天津渤化永利丁辛醇项目

=	FT2
SCALE	1:1
SHEET NO.	3
TOTAL PAGES	12
DRAWING NO.	XZS1-48353-A01-FT2-T

REV.	DESCRIPTION	REV. DATE

This drawing and information contained thereon is the property of ABB (XIAMEN) Switchgear CO. LTD. and shall not be used, reproduced for any purpose ,or shown to third parties without the written consent of ABB (XIAMEN) Switchgear CO. LTD.

==A01=FT2+-X4

备注	外引电缆	设备	线号	端子号	型号	线号	设备	外引电缆	备注
		-BCT1:1S1		1	NEK6S		-PMM:IA		
		-BCT1:1S2		2	NEK6S		-BCG1:X6/b5		
		-BCT2:1S1		3	NEK6S		-PMM:IB		
		-BCT2:1S2		4	NEK6S		-BCG1:X6/b6		
		-BCT3:1S1		5	NEK6S		-PMM:IC		
		-BCT3:1S2		6	NEK6S		-BCG1:X6/b7		
		-GND		7	NEK6S				
		-BCT1:2S1		8	NEK6S		-BCG1:X6/a1		
		-BCT1:2S2		9	NEK6S		-BCG1:X6/b1		
		-BCT2:2S1		10	NEK6S		-BCG1:X6/a2		
		-BCT2:2S2		11	NEK6S		-BCG1:X6/b2		
		-BCT3:2S1		12	NEK6S		-BCG1:X6/a3		
		-BCT3:2S2		13	NEK6S		-BCG1:X6/b3		
		-GND		14	NEK6S				
		-BCN:S1		15	NEK6S		-BCG1:X6/a12		
		-BCN:S2		16	NEK6S		-综合选线装置	△	
		-GND		17	NEK6S				
				18	NEK6S		-BCG1:X6/a4		
				19	NEK6S		-BCG1:X6/b4		
		-GND		20	NEK6S				
		-BCG1:X6/b12		21	NEK6S		-综合选线装置	△	
				22	NEK6S				
				23	NEK6S				
				24	NEK6S				

☆ 柜间小母线,随柜提供

△ 柜间控制电路(由客户自备)

短接排

✕ 分隔板

(测试短接片

O 其他

REV.	DESCRIPTION	REV. DATE		
			DRAWN	XINYU LIU
			CHECKED	Jianjun-Wang
			APPROVED	YongshengLi
			FIRST DATE	2025/4/28

TITLE: 端子图表 ==A01=FT2+-X4

CONTRACT NO.: 504485024

FUNCTION: 接地变压器柜

PROJECT: 天津渤化永利丁辛醇项目

=	FT2	SHEET NO.	4
SCALE	1:1	TOTAL PAGES	12

DRAWING NO. XZS1-48353-A01-FT2-T

REV.	DESCRIPTION	REV. DATE

This drawing and information contained thereon is the property of ABB (XIAMEN) Switchgear CO. LTD. and shall not be used, reproduced for any purpose ,or shown to third parties without the written consent of ABB (XIAMEN) Switchgear CO. LTD.

==A01=FT2+-X5

备注	外引电缆	设备	线号	端子号	型号	线号	设备	外引电缆	备注
				1	NEK4		-KFC1:14		
				2	NEK4		-KFC1:11		
				3	NEK4		-QAB:9		
				4	NEK4		-QAB:19		
				5	NEK4		-QAB:28		
				6	NEK4		-QAB:38		
				7	NEK4		-QAB:29		
				8	NEK4		-QAB:39		
				9	NEK4		-QAB:27		
				10	NEK4		-QAB:37		
				11	NEK4		-QAB:2		
				12	NEK4		-QAB:3		
				13	NEK4		-QAB:13		
				14	NEK4		-QAB:6		
				15	NEK4		-QAB:16		
				16	NEK4		-QAB:7		
				17	NEK4		-QAB:17		
				18	NEK4		-QAB:23		
				19	NEK4		-QAB:33		
				20	NEK4		-QAB:55		
				21	NEK4		-QAB:56		
				22	NEK4		-QAB:48		
				23	NEK4		-QAB:12		
				24	NEK4		-QAB:47		
				25	NEK4		-QAB:57		
				26	NEK4		-QAB:58		
	△	-变压器本体		27	NEK4		-QCE:BGE2/44		
	△	-变压器本体		28	NEK4		-QCE:BGE2/45		
				29	NEK4		-QCE:BGE2/46		
				30	NEK4		-QCE:BGE2/47		
				31	NEK4		-QCE:BGE3/24		
				32	NEK4		-QCE:BGE3/25		
				33	NEK4		-QCE:BGE3/26		
				34	NEK4		-QCE:BGE3/27		
				35	NEK4		-SFS32:5		
				36	NEK4		-SFS32:6		
				37	NEK4		-SFS32:7		
				38	NEK4		-SFS32:8		
				39	NEK4		-FCM20:11		
				40	NEK4		-FCM20:12		
				41	NEK4		-SAM:P1/03		
				42	NEK4		-SAM:P1/04		
				43	NEK4		-BCG1:X3/c12		
				44	NEK4		-BCG1:X3/a12		
				45	NEK4		-BCG1:X3/c16		
				46	NEK4		-BCG1:X3/a16		
				47	NEK4		-BCG1:X5/c12		
				48	NEK4		-BCG1:X5/a12		
				49	NEK4		-BCG1:X2/c28		
				50	NEK4		-BCG1:X2/c32		
				51	NEK4		-BCG1:X2/c30		
				52	NEK4		-BCG1:X1/a22		
				53	NEK4		-BCG1:X1/a20		
				54	NEK4		-BCG1:X1/a18		

☆ 柜间小母线,随柜提供

△ 柜间控制电路(由客户自备)

短接排

分隔板

(测试短接片

O 其他

REV.	DESCRIPTION	REV. DATE

DRAWN	XINYU LIU	TITLE
CHECKED	Jianjun-Wang	端子图表 ==A01=FT2+-X5
APPROVED	Yongsheng.Li	CONTRACT NO.:
FIRST DATE	2025/4/28	504485024

FUNCTION 接地变压器柜

PROJECT 天津渤化永利丁辛醇项目

=	FT2	SHEET NO.	5
SCALE	1:1	TOTAL PAGES	12

DRAWING NO. XZS1-48353-A01-FT2-T

REV.	DESCRIPTION	REV. DATE

This drawing and information contained thereon is the property of ABB (XIAMEN) Switchgear CO. LTD. and shall not be used, reproduced for any purpose ,or shown to third parties without the written consent of ABB (XIAMEN) Switchgear CO. LTD.

==A01=FT2+-X5

备注	外引电缆	设备	线号	端子号	型号	线号	设备	外引电缆	备注
	△	-至邻柜继保BI		55	NEK4		-BCG1:X1/a14		
	△	-至邻柜继保BI		56	NEK4		-BCG1:X1/a16		
				57	NEK4		-BR20:4		
				58	NEK4		-BR25:V+		
				59	NEK4		-BR20:5		
				60	NEK4		-BR25:V-		
				61	NEK4				
				62	NEK4				
				63	NEK4				
				64	NEK4				
				65	NEK4				
				66	NEK4				
				67	NEK4				
				68	NEK4				
				69	NEK4				
				70	NEK4				

☆ 柜间小母线,随柜提供

△ 柜间控制电路(由客户自备)

短接排

分隔板

(测试短接片

O 其他

REV.		
DESCRIPTION		
REV. DATE		
DRAWN	XINYU LIU	TITLE
CHECKED	Jianjun-Wang	端子图表 ==A01=FT2+-X5
APPROVED	Yongsheng.Li	CONTRACT NO.:
FIRST DATE	2025/4/28	504485024
FUNCTION	接地变压器柜	
PROJECT	天津渤化永利丁辛醇项目	
=	FT2	SHEET NO. 5.a
SCALE	1:1	TOTAL PAGES 12
DRAWING NO.	XZS1-48353-A01-FT2-T	

REV.	DESCRIPTION	REV. DATE

This drawing and information contained thereon is the property of ABB (XIAMEN) Switchgear CO. LTD. and shall not be used, reproduced for any purpose ,or shown to third parties without the written consent of ABB (XIAMEN) Switchgear CO. LTD.

==A01=FT2+-X6

备注	外引电缆	设备	线号	端子号	型号	线号	设备	外引电缆	备注
		-FCM65:2		1	NEK4		-BCG1:X6/a8		
		-FCM65:4		2	NEK4		-BCG1:X6/a9		
		-FCM65:6		3	NEK4		-BCG1:X6/a10		
		-X13:4		4	NEK4		-BCG1:X6/b8		
		-FCM66:2		5	NEK4		-PMM:UA		
		-FCM66:4		6	NEK4		-PMM:UB		
		-FCM66:6		7	NEK4		-PMM:UC		
		-X13:10		8	NEK4		-PMM:UN		
	△	-综合选线装置		9	NEK4		-X13:1		
	△	-综合选线装置		10	NEK4		-X13:2		
	△	-综合选线装置		11	NEK4		-X13:3		
	△	-综合选线装置		12	NEK4		-X13:4		
	△	-综合选线装置		13	NEK4				

☆ 柜间小母线,随柜提供

△ 柜间控制电路(由客户自备)

短接排

✕ 分隔板

(测试短接片

O 其他

REV.	DESCRIPTION	REV. DATE

DRAWN	XINYU LIU	TITLE
CHECKED	Jianjun-Wang	端子图表 ==A01=FT2+-X6
APPROVED	Yongsheng.Li	CONTRACT NO.:
FIRST DATE	2025/4/28	504485024

FUNCTION 接地变压器柜

PROJECT 天津渤化永利丁辛醇项目

=	FT2
SCALE	1:1
SHEET NO	6
TOTAL PAGES	12

DRAWING NO XZS1-48353-A01-FT2-T

REV.	DESCRIPTION	REV. DATE

This drawing and information contained thereon is the property of ABB (XIAMEN) Switchgear CO. LTD. and shall not be used, reproduced for any purpose ,or shown to third parties without the written consent of ABB (XIAMEN) Switchgear CO. LTD.

==A01=FT2+-X9

备注	外引电缆	设备	线号	端子号	型号	线号	设备	外引电缆	备注
				1	NEK4		-EB2:1		
				2	NEK4		-SB2:13		
		-FCM90:2		3	NEK4		-BGD1:1		
				4	NEK4		-EB2:2		
				5	NEK4		-EA2:A2		
		-X11:4		6	NEK4		-EA1:A2		
		-SB2:14		7	NEK4		-EA2:A1		
		-EA1:A1		8	RCT4SW		-BGD1:2		

☆ 柜间小母线,随柜提供

△ 柜间控制电路(由客户自备)

短接排

分隔板

(测试短接片

O 其他

DRAWN	XINYU LIU	TITLE
CHECKED	Jianjun-Wang	端子图表 ==A01=FT2+-X9
APPROVED	Yongsheng.Li	CONTRACT NO.:
FIRST DATE	2025/4/28	504485024
REV. DATE		
DESCRIPTION		
REV.		

FUNCTION 接地变压器柜

PROJECT 天津渤化永利丁辛醇项目

=	FT2	SHEET NO. 7
SCALE	1:1	TOTAL PAGES 12
DRAWING NO.	XZS1-48353-A01-FT2-T	

REV.	DESCRIPTION	REV. DATE

This drawing and information contained thereon is the property of ABB (XIAMEN) Switchgear CO. LTD. and shall not be used, reproduced for any purpose ,or shown to third parties without the written consent of ABB (XIAMEN) Switchgear CO. LTD.

==A01=FT2+-X11

备注	外引电缆	设备	线号	端子号	型号	线号	设备	外引电缆	备注
6黑色	☆	-X11.2:1		1	A3C 6		-FCM90:1		
6黑色	☆	-X11.1:1							
6黑色	☆	-X11.2:2		2	A3C 6				
6黑色	☆	-X11.1:2							
6黑色	☆	-X11.2:3		3	A3C 6				
6黑色	☆	-X11.1:3							
6黑色	☆	-X11.2:4		4	A3C 6		-X9:6		
6黑色	☆	-X11.1:4							
6黑色	☆	-X11.2:5		5	A3C 6		-FCM10:3		
6黑色	☆	-X11.1:5							
6黑色	☆	-X11.2:6		6	A3C 6		-FCM10:1		
6黑色	☆	-X11.1:6							
6黑色	☆	-X11.2:7		7	A3C 6		-FCM30:3		
6黑色	☆	-X11.1:7							
6黑色	☆	-X11.2:8		8	A3C 6		-FCM30:1		
6黑色	☆	-X11.1:8							

☆ 柜间小母线,随柜提供

△ 柜间控制电路(由客户自备)

短接排

分隔板

(测试短接片

O 其他

REV.	DESCRIPTION	REV. DATE

DRAWN XINYU LIU
CHECKED Jianjun-Wang
APPROVED Yongsheng.Li
FIRST DATE 2025/4/28

TITLE 端子图表 ==A01=FT2+-X11

CONTRACT NO.: 504485024

FUNCTION 接地变压器柜

PROJECT 天津渤化永利丁辛醇项目

= FT2
SCALE 1:1
SHEET NO. 8
TOTAL PAGES 12
DRAWING NO. XZS1-48353-A01-FT2-T

REV.	DESCRIPTION	REV. DATE

This drawing and information contained thereon is the property of ABB (XIAMEN) Switchgear CO. LTD. and shall not be used, reproduced for any purpose ,or shown to third parties without the written consent of ABB (XIAMEN) Switchgear CO. LTD.

==A01=FT2+-X13

备注	外引电缆	设备	线号	端子号	型号	线号	设备	外引电缆	备注
	☆	-X13.1:1(11)		1	A4C 4		-FCM65:1		
	☆	-X13.2:1					-X6:9		
	☆	-X13.1:2(12)		2	A4C 4		-FCM65:3		
	☆	-X13.2:2					-X6:10		
	☆	-X13.1:3(13)		3	A4C 4		-FCM65:5		
	☆	-X13.2:3					-X6:11		
	☆	-X13.1:4(14)		4	A4C 4		-X6:4		
	☆	-X13.2:4					-X6:12		
	☆	-X13.1:5(15)		5	A4C 4				
	☆	-X13.2:5							
	☆	-X13.1:6(16)		6	A4C 4				
	☆	-X13.2:6							
	☆	-X13.3:7(17)		7	A4C 4		-FCM66:1		
	☆	-X13.4:7							
	☆	-X13.3:8(18)		8	A4C 4		-FCM66:3		
	☆	-X13.4:8							
	☆	-X13.3:9(19)		9	A4C 4		-FCM66:5		
	☆	-X13.4:9							
	☆	-X13.3:10(20)		10	A4C 4		-X6:8		
	☆	-X13.4:10							

☆ 柜间小母线,随柜提供

△ 柜间控制电路(由客户自备)

短接排

分隔板

(测试短接片

O 其他

REV.		
DESCRIPTION		
REV. DATE		
DRAWN	XINYU LIU	TITLE
CHECKED	Jianjun-Wang	端子图表 ==A01=FT2+-X13
APPROVED	Yongsheng.Li	CONTRACT NO.:
FIRST DATE	2025/4/28	504485024

FUNCTION 接地变压器柜

PROJECT 天津渤化永利丁辛醇项目

=	FT2	
SCALE	1:1	SHEET NO. 9
DRAWING NO.	XZS1-48353-A01-FT2-T	TOTAL PAGES 12

REV.	DESCRIPTION	REV. DATE

This drawing and information contained thereon is the property of ABB (XIAMEN) Switchgear CO. LTD. and shall not be used, reproduced for any purpose ,or shown to third parties without the written consent of ABB (XIAMEN) Switchgear CO. LTD.

==A01=FT2+-X14

备注	外引电缆	设备	线号	端子号	型号	线号	设备	外引电缆	备注
	☆	-X14:2		● 1	NEK4		-BR20:10		
	☆	-X14:1		● 2 ×	NEK4				
	☆	-X14:4		● 3	NEK4		-BR20:9		
	☆	-X14:3		● 4 ×	NEK4				
	☆	-X14:6		● 5	NEK4		-ST1		
	☆	-X14:5		● 6 ×	NEK4				
	☆	-X14:8		● 7	NEK4				
	☆	-X14:7		● 8 ×	NEK4				
	☆	-X14:10		● 9	NEK4				
	☆	-X14:9		● 10 ×	NEK4				
	☆	-X14:12		● 11	NEK4				
	☆	-X14:11		● 12 ×	NEK4				
				13	NEK4		-BCG1:X4/1		
				14	NEK4		-BCG1:X4/2		
				15	NEK4		-BCG1:X4/3		
				16	NEK4		-SAM:P1/01		
				17	NEK4		-SAM:P1/02		
				18	NEK4		-PMM:A		
				19	NEK4		-PMM:B		
				20	NEK4		-PMM:S		
				● 21	NEK4		-BR20:7		
				● 22 ×	NEK4		-BR25:A		
				● 23	NEK4		-BR20:6		屏蔽双绞线
				● 24 ×	NEK4		-BR25:B		

☆ 柜间小母线,随柜提供

△ 柜间控制电路(由客户自备)

短接排

× 分隔板

(测试短接片

O 其他

DRAWN	XINYU LIU
CHECKED	Jianjun-Wang
APPROVED	Yongsheng.Li
FIRST DATE	2025/4/28
REV. DATE	
REV.	
DESCRIPTION	

TITLE 端子图表 ==A01=FT2+-X14

CONTRACT NO.: 504485024

FUNCTION 接地变压器柜

PROJECT 天津渤化永利丁辛醇项目

=	FT2
SCALE	1:1
SHEET NO.	10
TOTAL PAGES	12
DRAWING NO.	XZS1-48353-A01-FT2-T

单线图

一次设备索引			
设备号	设备名称	数量	物料号
-QAB	真空断路器	1	VD4/P-77
-BCT1	电流互感器	1	CTA-G1K314-0250
-BCT2	电流互感器	1	CTA-G1K314-0250
-BCT3	电流互感器	1	CTA-G1K314-0250
-BAD	电容分压装置	3	DIK-06-B06N1000C-1
-QCE	接地开关	1	ET1-BGE2/3
-FA	避雷器	3	SAS-YH5WR-10/27
-BCN	零序电流互感器	1	CTZ-GLMZ2150501-A1

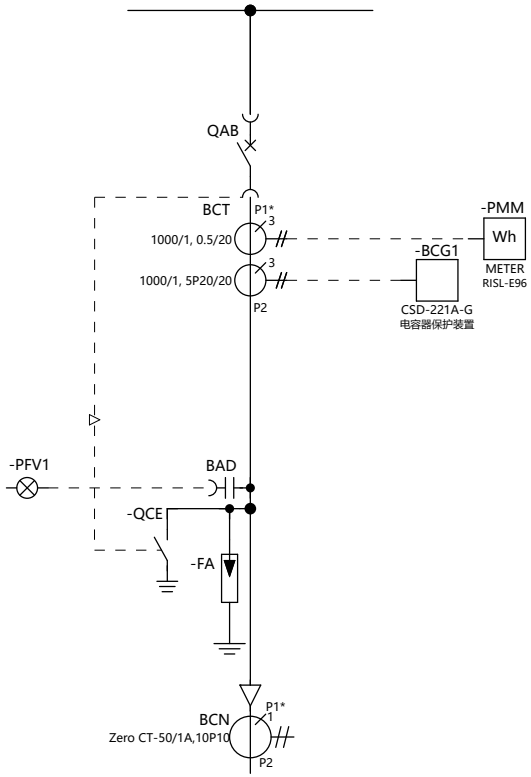

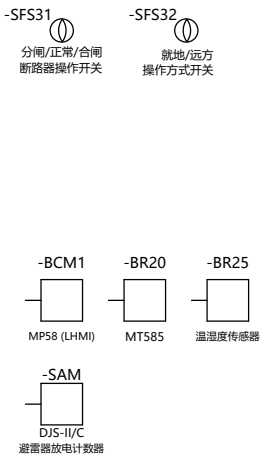

This drawing and information contained thereon is the property of ABB (XIAMEN) Switchgear CO. LTD. and shall not be used, reproduced for any purpose, or shown to third parties without the written consent of ABB (XIAMEN) Switchgear CO. LTD.

REV.	DESCRIPTION	REV. DATE

DRAWN	XINYU LIU	TITLE	单线图
CHECKED	Jianjun-Wang		
APPROVED	Yongsheng.Li	CONTRACT NO.:	504485024
FIRST DATE	2025/4/28		

FUNCTION: 电容柜

PROJECT: 天津渤化永利丁辛醇项目

= FC1 | SHEET NO 1 | SCALE 1:1 | TOTAL PAGES 13

DRAWING NO XZS1-48353-A01-FC1-S

断路器弹簧储能电机回路	控制回路	保护与信号回路	加热器回路 电缆室 100W	电缆室照明	低压室照明

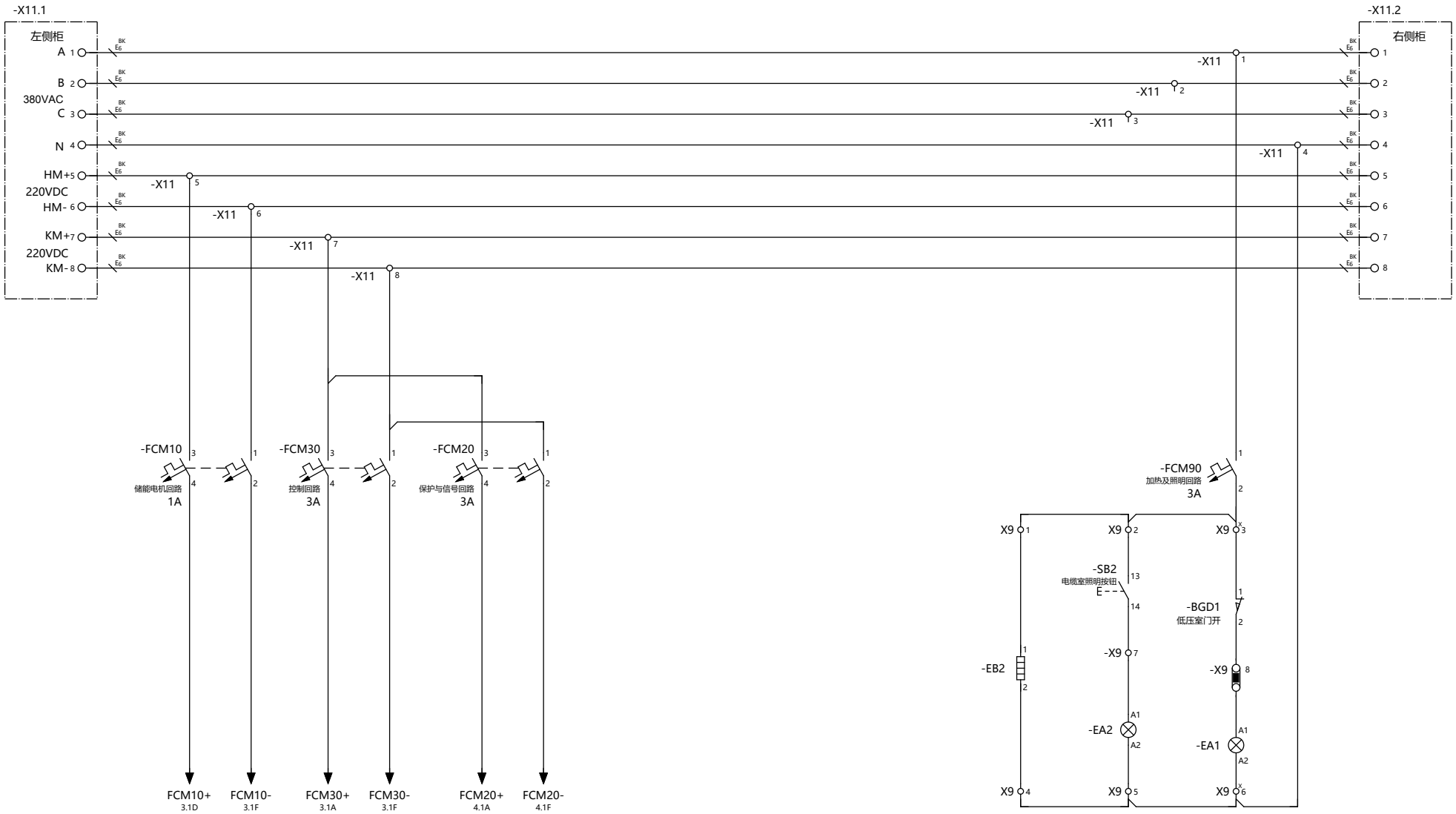

This drawing and information contained thereon is the property of ABB (XIAMEN) Switchgear CO. LTD. and shall not be used, reproduced for any purpose ,or shown to third parties without the written consent of ABB (XIAMEN) Switchgear CO. LTD.

REV.	DESCRIPTION	REV. DATE

DRAWN	XINYU LIU	TITLE	电源小母线回路
CHECKED	Jianjun-Wang		
APPROVED	Yongsheng.Li	CONTRACT NO.:	504485024
FIRST DATE	2025/4/28		

ABB

FUNCTION	电容柜
PROJECT	天津渤化永利丁辛醇项目

=	FC1	SHEET NO	2
SCALE	1:1	TOTAL PAGES	13
DRAWING NO	XZS1-48353-A01-FC1-S		

断路器弹簧储能电机	已储能指示灯	断路器合闸回路				断路器分闸回路						保护操作电源	带电显示及其闭锁回路
		合闸闭锁	备用	就地合闸	远方合闸	远方分闸	就地分闸	永跳 电容器跳闸	备用	保护跳闸	备用		

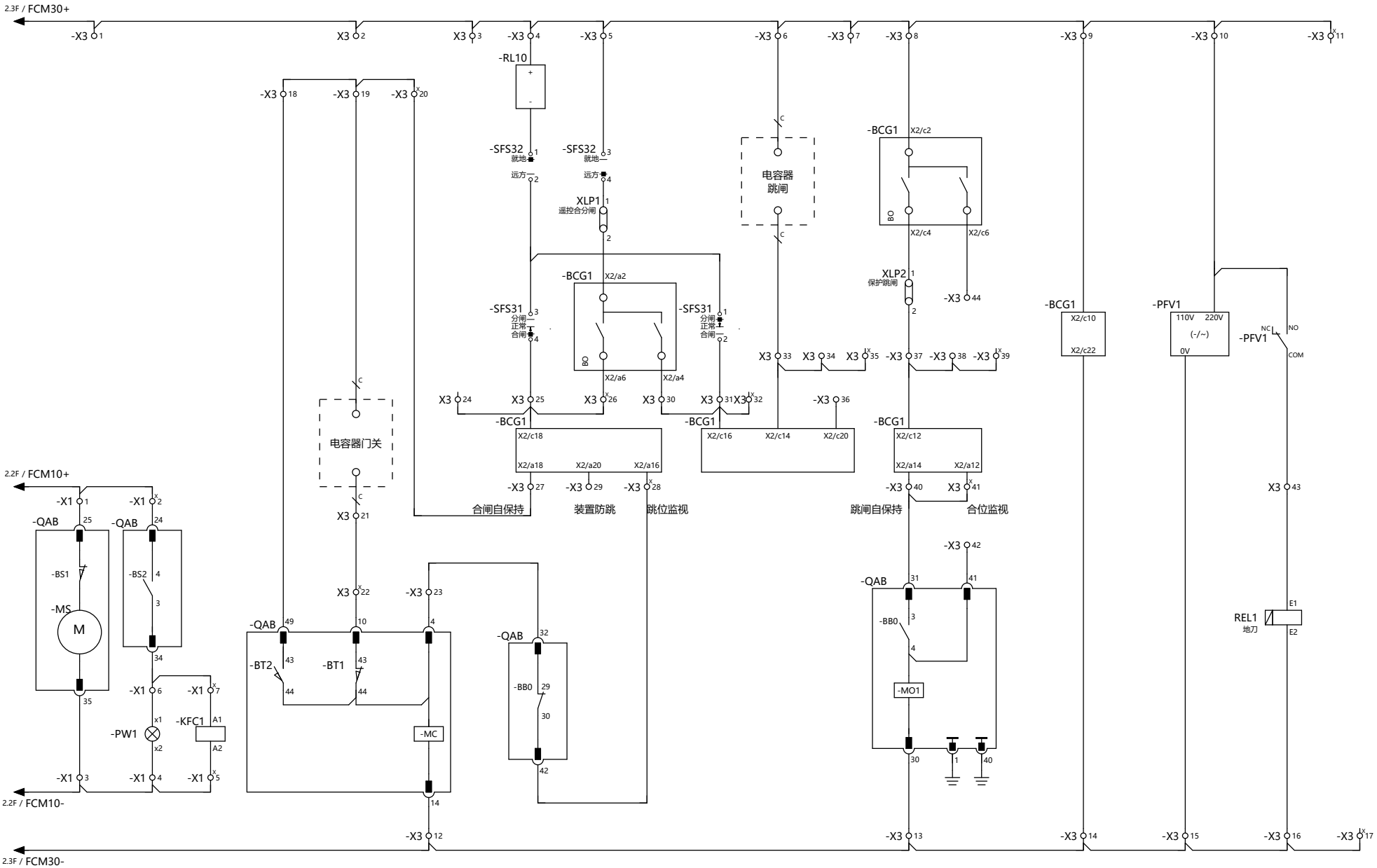

This drawing and information contained thereon is the property of ABB (XIAMEN) Switchgear CO. LTD. and shall not be used, reproduced for any purpose, or shown to third parties without the written consent of ABB (XIAMEN) Switchgear CO. LTD.

REV.	DESCRIPTION	REV. DATE

DRAWN	XINYU LIU	TITLE	控制回路
CHECKED	Jianjun-Wang		
APPROVED	Yongsheng.Li	CONTRACT NO.:	504485024
FIRST DATE	2025/4/28		

ABB

FUNCTION	电容柜
PROJECT	天津渤化永利丁辛醇项目

= FC1		SHEET NO	3
SCALE	1:1	TOTAL PAGES	13
DRAWING NO	XZS1-48353-A01-FC1-S		

断路器状态		断路器手车位置		接地开关状态		MT585电源	多功能表电源	避雷器计数器电源	保护装置辅助电源
合闸	分闸	工作	试验	合闸	分闸				

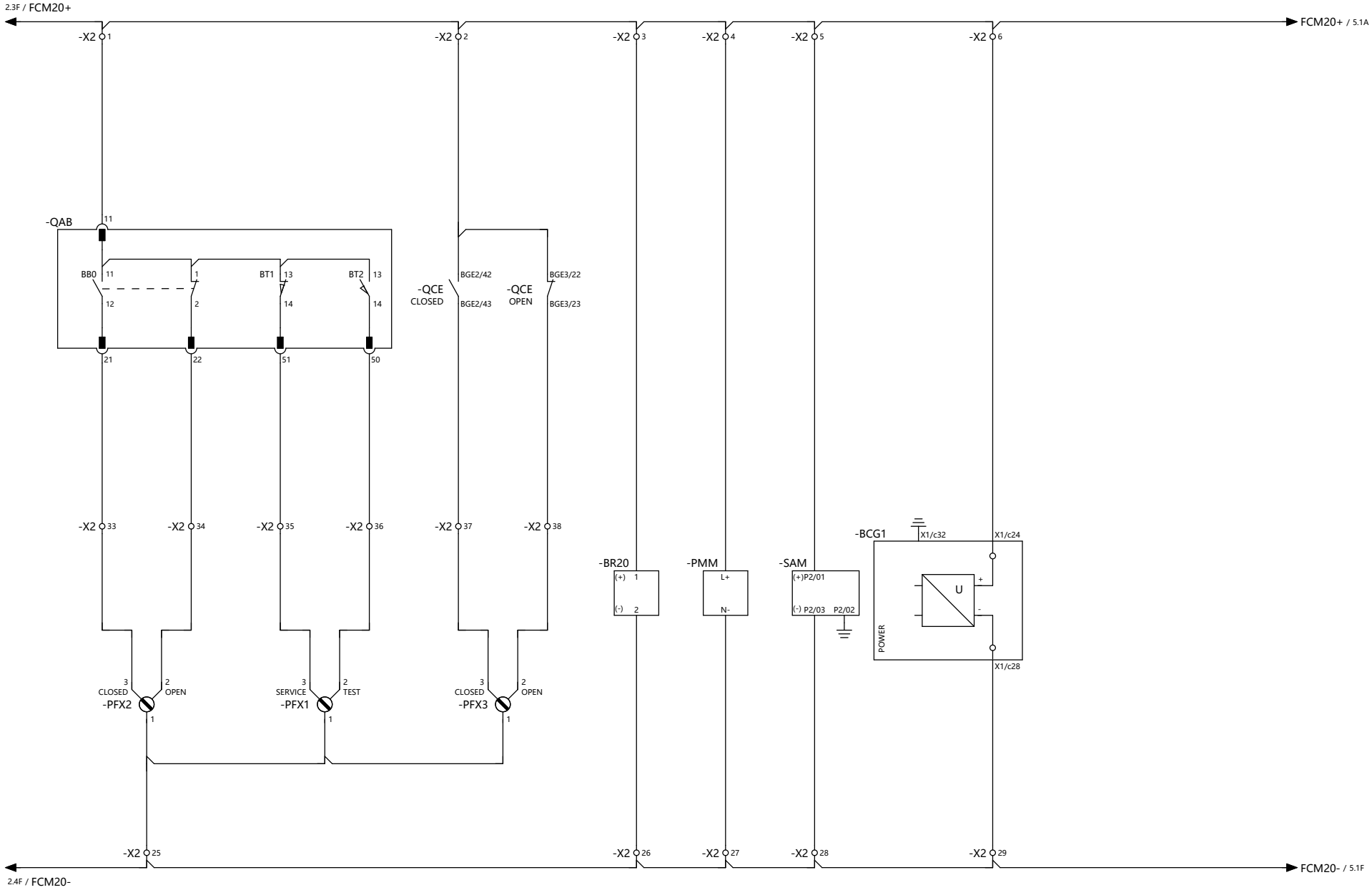

This drawing and information contained thereon is the property of ABB (XIAMEN) Switchgear CO. LTD. and shall not be used, reproduced for any purpose ,or shown to third parties without the written consent of ABB (XIAMEN) Switchgear CO. LTD.

REV.	DESCRIPTION	REV. DATE

DRAWN	XINYU LIU	TITLE	保护与信号回路
CHECKED	Jianjun-Wang		
APPROVED	Yongsheng.Li	CONTRACT NO.:	504485024
FIRST DATE	2025/4/28		

FUNCTION: 电容柜

PROJECT: 天津渤化永利丁辛醇项目

= FC1 | SHEET NO 4 | SCALE 1:1 | TOTAL PAGES 13

DRAWING NO XZS1-48353-A01-FC1-S

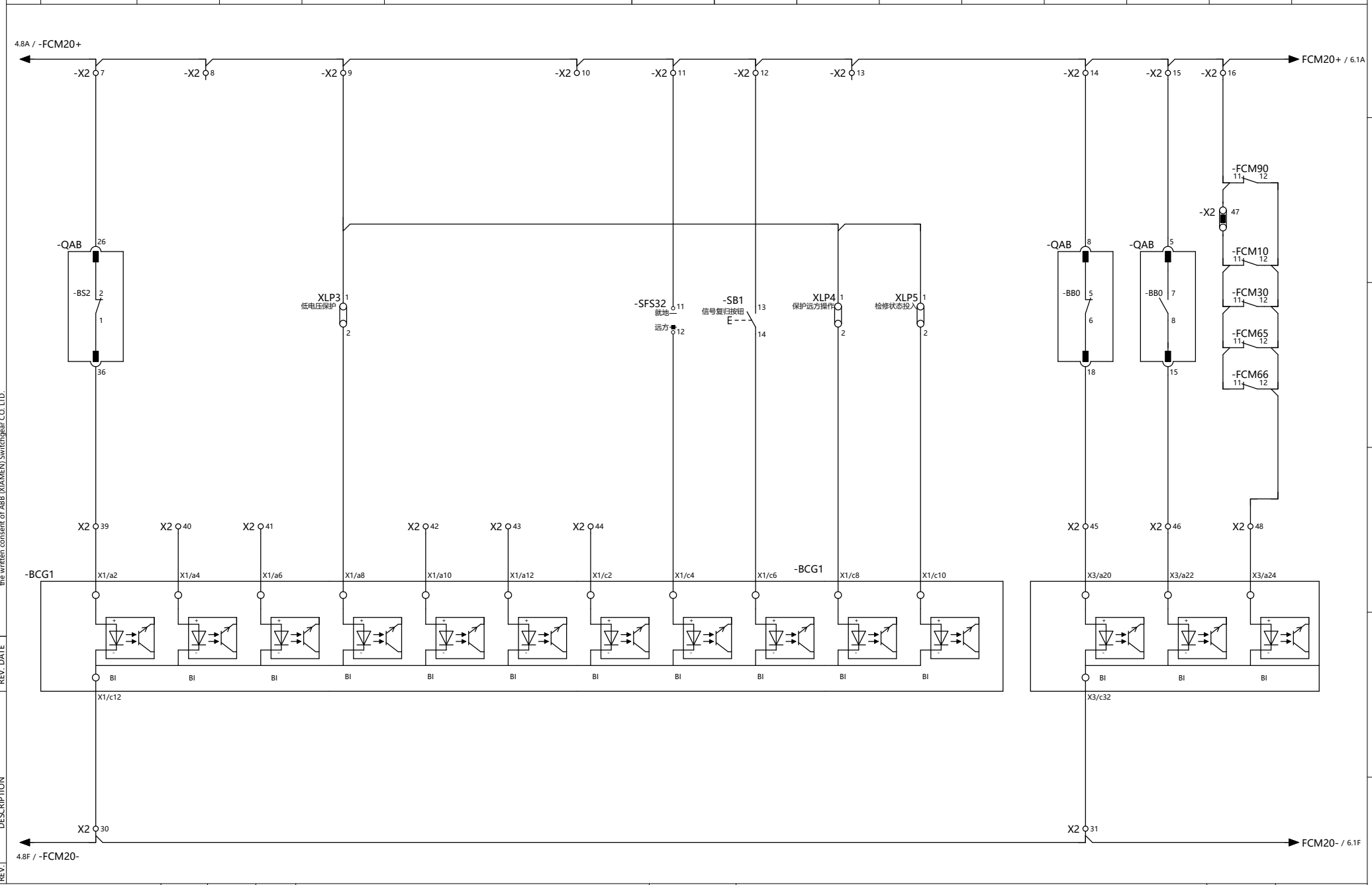

This drawing and information contained thereon is the property of ABB (XIAMEN) Switchgear CO. LTD. and shall not be used, reproduced for any purpose ,or shown to third parties without the written consent of ABB (XIAMEN) Switchgear CO. LTD.

REV.	DESCRIPTION	REV. DATE

DRAWN	XINYU LIU	TITLE	保护与信号回路
CHECKED	Jianjun-Wang		
APPROVED	Yongsheng.Li	CONTRACT NO.:	504485024
FIRST DATE	2025/4/28		

FUNCTION: 电容柜

PROJECT: 天津渤化永利丁辛醇项目

= FC1 | SCALE 1:1 | SHEET NO 5 | TOTAL PAGES 13

DRAWING NO XZS1-48353-A01-FC1-S

断路器手车位置		接地开关状态		邻柜继保装置故障	电容器门开	备用
工作	试验	合闸	分闸			

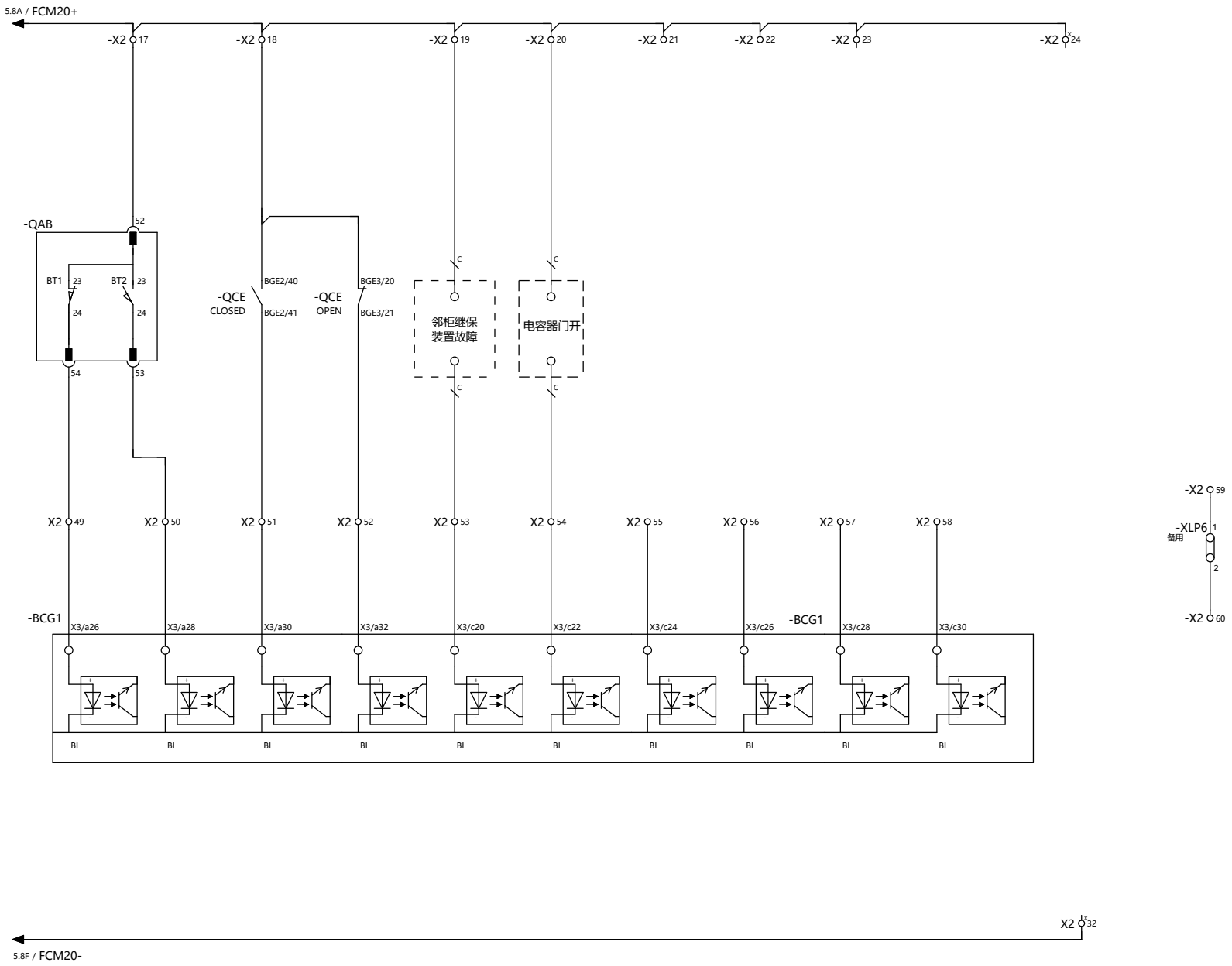

This drawing and information contained thereon is the property of ABB (XIAMEN) Switchgear CO. LTD. and shall not be used, reproduced for any purpose, or shown to third parties without the written consent of ABB (XIAMEN) Switchgear CO. LTD.

REV.	DESCRIPTION	REV. DATE

DRAWN	XINYU LIU	TITLE	保护与信号回路
CHECKED	Jianjun-Wang		
APPROVED	Yongsheng.Li	CONTRACT NO.:	504485024
FIRST DATE	2025/4/28		

FUNCTION: 电容柜

PROJECT: 天津渤化永利丁辛醇项目

= FC1 | SHEET NO 6
SCALE 1:1 | TOTAL PAGES 13
DRAWING NO XZS1-48353-A01-FC1-S

断路器已储能	断路器状态		断路器手车位置		接地开关状态		就地/远方选择开关位置	
	合闸	分闸	工作	试验	合闸	分闸	就地	远方

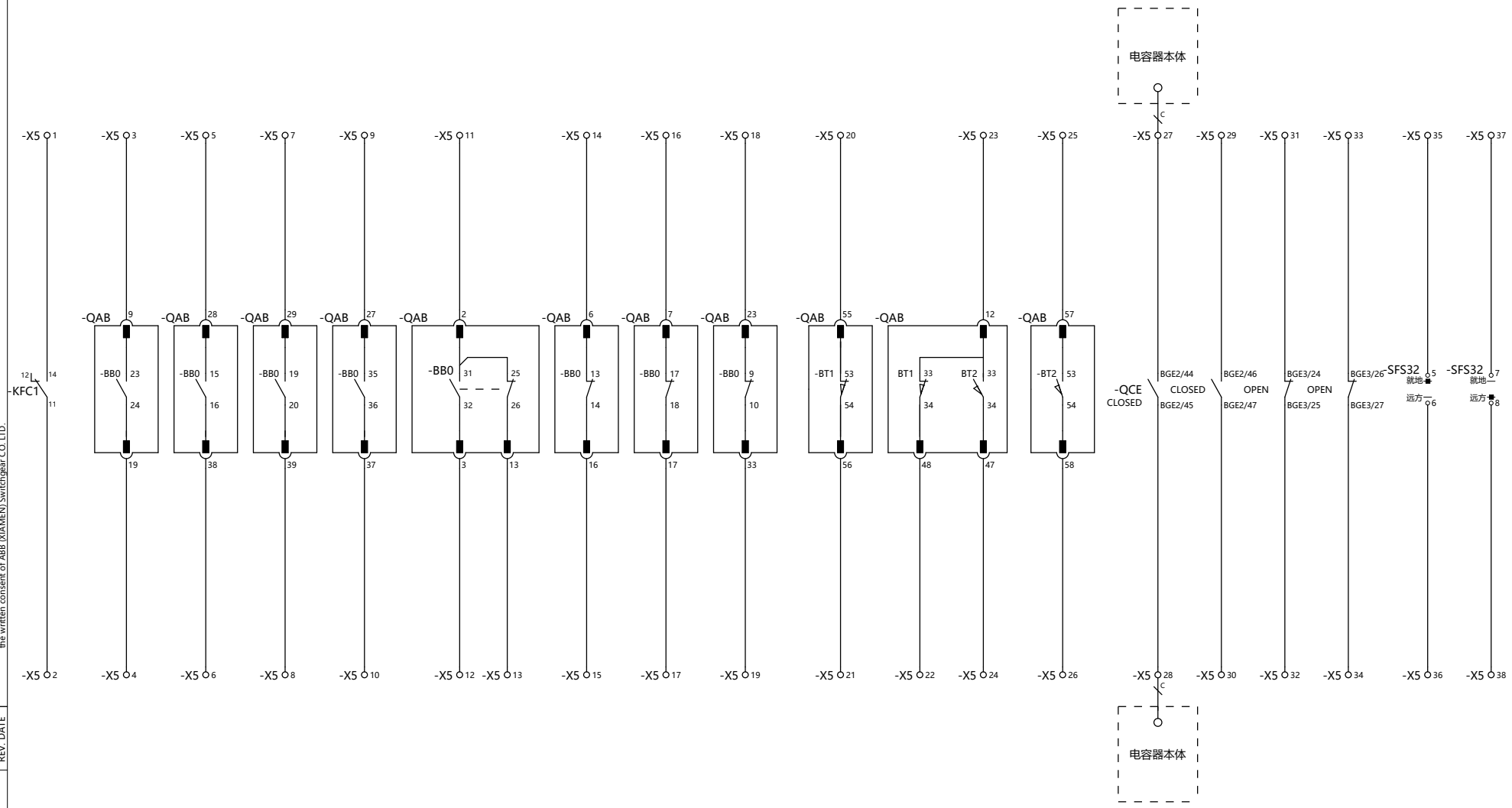

This drawing and information contained thereon is the property of ABB (XIAMEN) Switchgear CO. LTD. and shall not be used, reproduced for any purpose, or shown to third parties without the written consent of ABB (XIAMEN) Switchgear CO. LTD.

REV.	DESCRIPTION	REV. DATE

DRAWN	XINYU LIU	TITLE	备用回路
CHECKED	Jianjun-Wang		
APPROVED	Yongsheng.Li	CONTRACT NO.:	504485024
FIRST DATE	2025/4/28		

ABB

FUNCTION	电容柜
PROJECT	天津渤化永利丁辛醇项目

= FC1		SHEET NO	7
SCALE	1:1	TOTAL PAGES	13
DRAWING NO	XZS1-48353-A01-FC1-S		

保护空开信号	避雷器计数器报警信号	事故总信号	控制回路断线	非保持信号			
				备用	保护动作	运行异常告警	装置故障告警

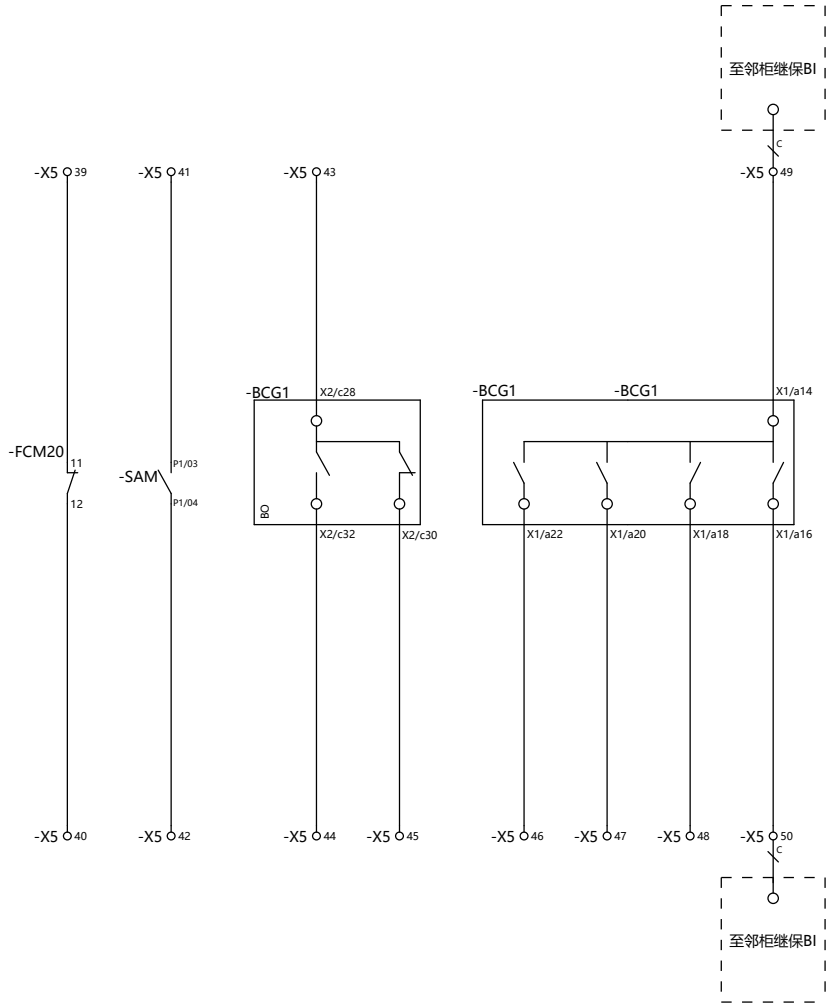

-X5 55 -X5 56 -X5 57 -X5 58 -X5 59

-X5 60 -X5 61 -X5 62 -X5 63 -X5 64

This drawing and information contained thereon is the property of ABB (XIAMEN) Switchgear CO. LTD. and shall not be used, reproduced for any purpose ,or shown to third parties without the written consent of ABB (XIAMEN) Switchgear CO. LTD.

REV.	DESCRIPTION	REV. DATE

DRAWN	XINYU LIU	TITLE	备用回路
CHECKED	Jianjun-Wang		
APPROVED	Yongsheng.Li	CONTRACT NO.:	504485024
FIRST DATE	2025/4/28		

FUNCTION: 电容柜

PROJECT: 天津渤化永利丁辛醇项目

= FC1 | SHEET NO 8 | SCALE 1:1 | TOTAL PAGES 13

DRAWING NO XZS1-48353-A01-FC1-S

通讯小母线	保护对时口	避雷器计数器通讯	多功能表485通讯

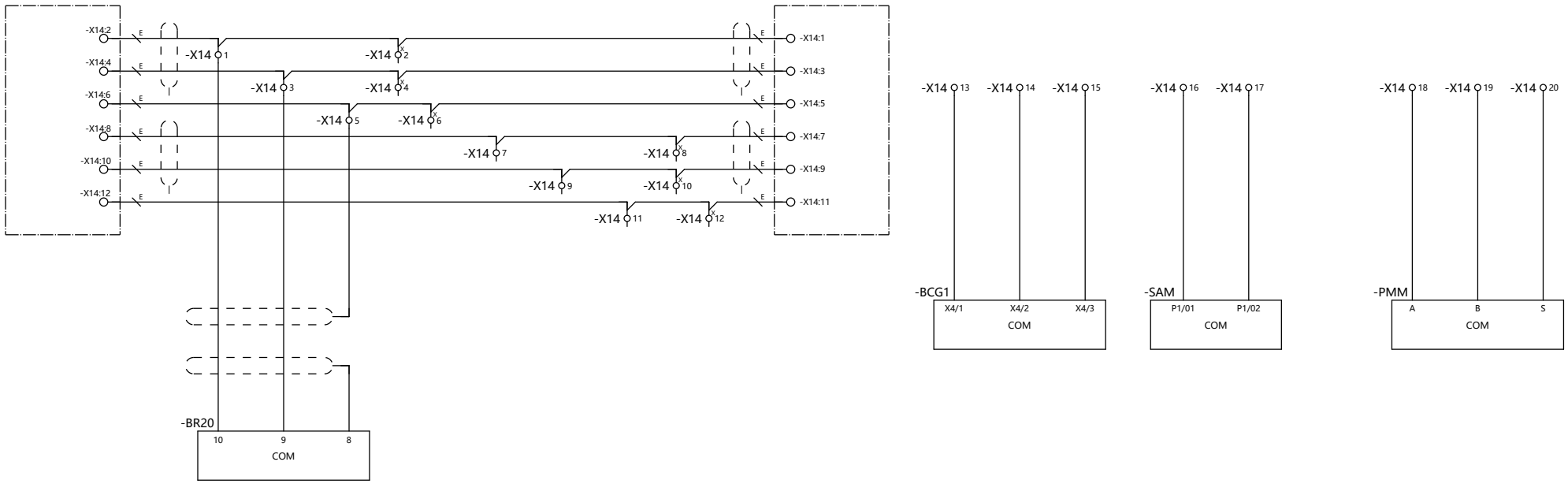

This drawing and information contained thereon is the property of ABB (XIAMEN) Switchgear CO. LTD. and shall not be used, reproduced for any purpose ,or shown to third parties without the written consent of ABB (XIAMEN) Switchgear CO. LTD.

REV.	DESCRIPTION	REV. DATE

DRAWN	XINYU LIU	TITLE	通信回路
CHECKED	Jianjun-Wang		
APPROVED	Yongsheng.Li	CONTRACT NO.:	504485024
FIRST DATE	2025/4/28		

FUNCTION	电容柜
PROJECT	天津渤化永利丁辛醇项目

=	FC1	SHEET NO	9
SCALE	1:1	TOTAL PAGES	13
DRAWING NO	XZS1-48353-A01-FC1-S		

MT585 24VDC输出	温湿度控制电源	MT585通讯接口 (与MB585通讯接口)	温湿度控制器通讯	HMI 电源及通讯 示意图

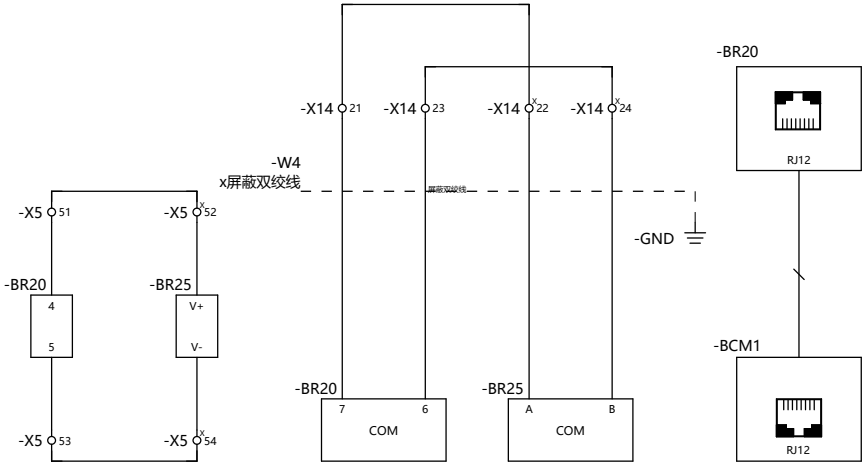

This drawing and information contained thereon is the property of ABB (XIAMEN) Switchgear CO. LTD. and shall not be used, reproduced for any purpose ,or shown to third parties without the written consent of ABB (XIAMEN) Switchgear CO. LTD.

REV.	DESCRIPTION	REV. DATE

DRAWN	XINYU LIU	TITLE	通信回路
CHECKED	Jianjun-Wang		
APPROVED	Yongsheng.Li	CONTRACT NO.:	504485024
FIRST DATE	2025/4/28		

FUNCTION	电容柜
PROJECT	天津渤化永利丁辛醇项目

=	FC1	SHEET NO	10
SCALE	1:1	TOTAL PAGES	13
DRAWING NO	XZS1-48353-A01-FC1-S		

电压小母线

计量小母线

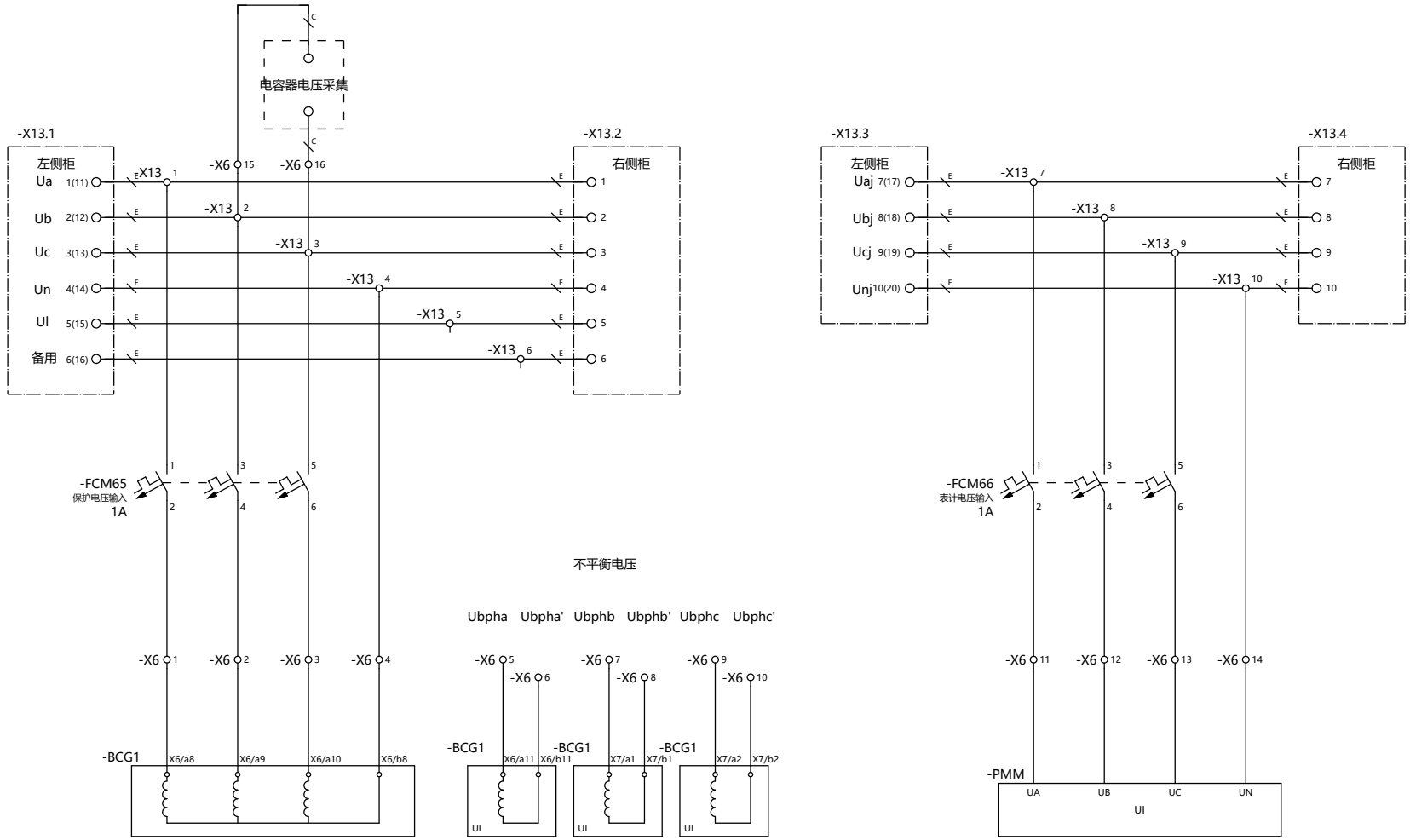

This drawing and information contained thereon is the property of ABB (XIAMEN) Switchgear CO. LTD. and shall not be used, reproduced for any purpose, or shown to third parties without the written consent of ABB (XIAMEN) Switchgear CO. LTD.

REV.	DESCRIPTION	REV. DATE

DRAWN	XINYU LIU	TITLE	电压小母线
CHECKED	Jianjun-Wang		
APPROVED	Yongsheng.Li	CONTRACT NO.:	504485024
FIRST DATE	2025/4/28		

FUNCTION: 电容柜

PROJECT: 天津渤化永利丁辛醇项目

= FC1 | SHEET NO 11
SCALE 1:1 | TOTAL PAGES 13
DRAWING NO XZS1-48353-A01-FC1-S

测量电流输入 | 保护电流输入 | 零序电流输入

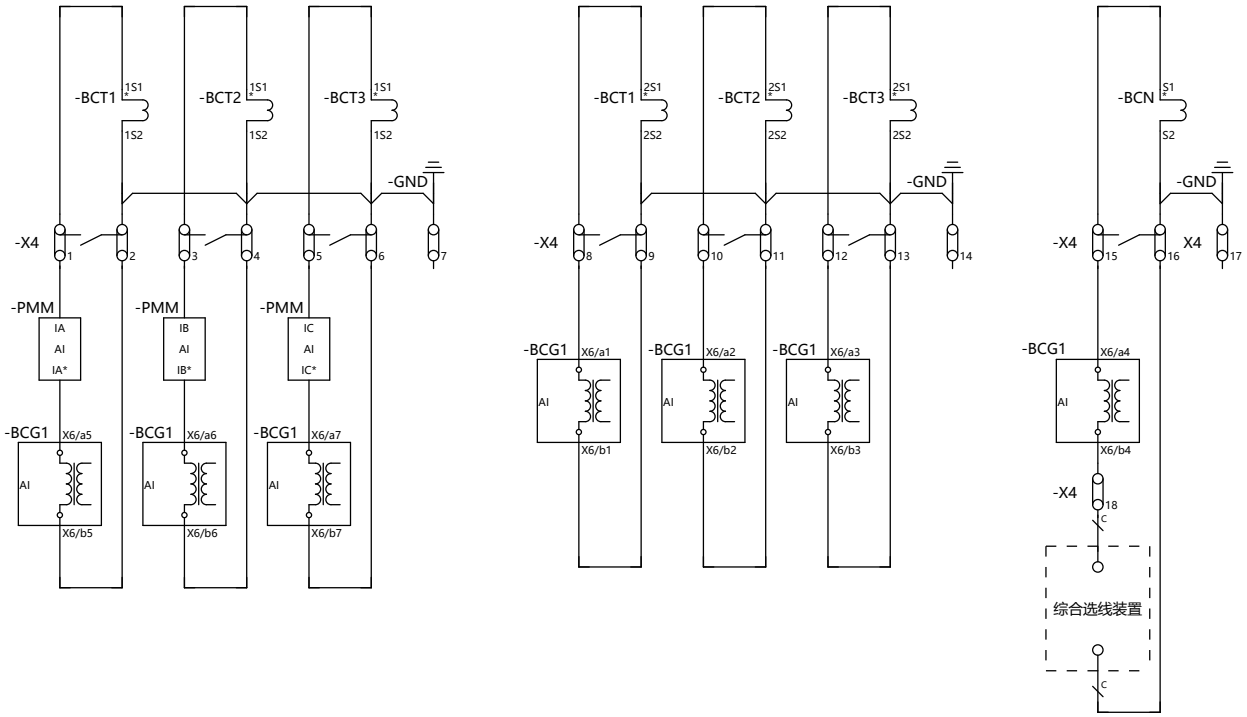

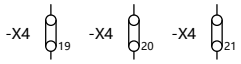

This drawing and information contained thereon is the property of ABB (XIAMEN) Switchgear CO. LTD. and shall not be used, reproduced for any purpose, or shown to third parties without the written consent of ABB (XIAMEN) Switchgear CO. LTD.

REV.	DESCRIPTION	REV. DATE

DRAWN	XINYU LIU	TITLE	电流回路
CHECKED	Jianjun-Wang		
APPROVED	Yongsheng.Li	CONTRACT NO.:	504485024
FIRST DATE	2025/4/28		

FUNCTION: 电容柜

PROJECT: 天津渤化永利丁辛醇项目

= FC1 | SHEET NO 12

SCALE 1:1 | TOTAL PAGES 13

DRAWING NO XZS1-48353-A01-FC1-S

VD4

-QAB

VD4/P-77

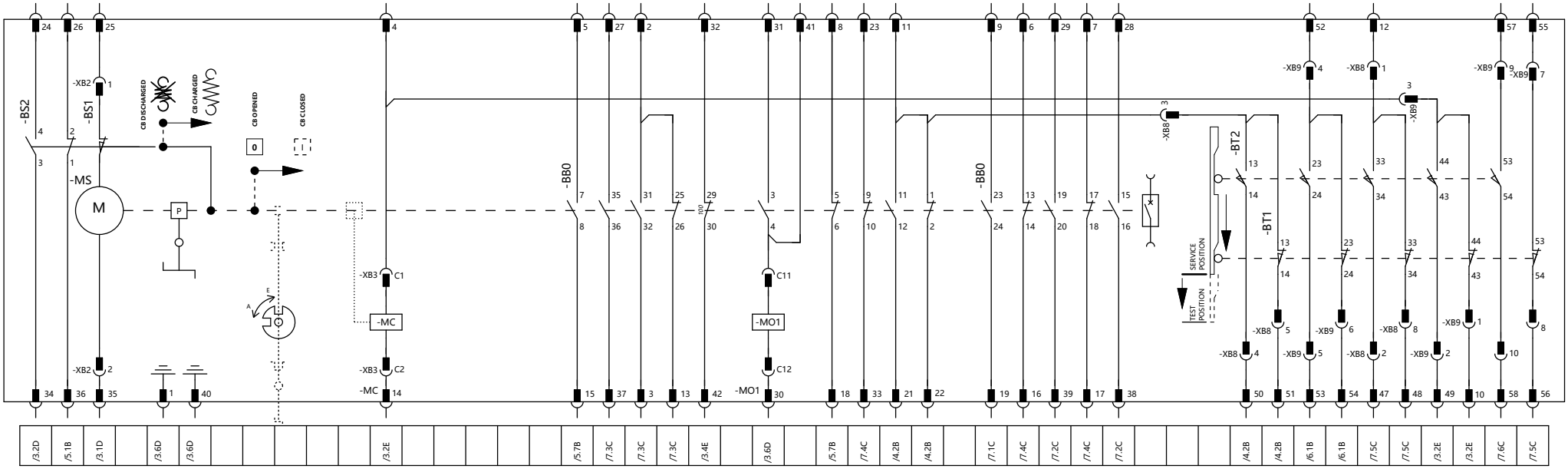

/3.2D /5.1B /3.1D /3.6D /3.6D /3.2E /5.7B /7.3C /7.3C /7.3C /3.4E /3.6D /5.7B /7.4C /4.2B /4.2B /7.1C /7.4C /7.2C /7.4C /7.2C /4.2B /4.2B /6.1B /6.1B /7.5C /7.5C /3.2E /3.2E /7.6C /7.5C

接地开关与断路器手车具有可靠的机械闭锁： A)
只有当断路器手车位于试验位置时，才允许操作接地开关 B)
只有当接地开关处于分状态时,断路器手车才允许由试验位置推入运行位置。

电气控制接线图/接点位置参考：
此图所示状态为：断路器手车工作位置 断路器处于分闸状态 操作机构弹簧未储能

名称	描述	备注
-BS1	储能电机限位开关	
-MS	弹簧操作机构储能电机	
-MC	合闸脱扣器	
-MO1	第一分闸脱扣器	

名称	描述	备注
-BS2	合闸弹簧储能/未储能信号触点	
-BB0	与断路器主轴联动的辅助开关	
-BT1	限位开关(手车位于运行位置)	
-BT2	限位开关(手车位于试验位置)	

This drawing and information contained thereon is the property of ABB (XIAMEN) Switchgear CO. LTD. and shall not be used, reproduced for any purpose, or shown to third parties without the written consent of ABB (XIAMEN) Switchgear CO. LTD.

REV.	DESCRIPTION	REV. DATE

DRAWN	XINYU LIU	TITLE	断路器接线图
CHECKED	Jianjun-Wang		
APPROVED	Yongsheng.Li	CONTRACT NO.:	504485024
FIRST DATE	2025/4/28		

FUNCTION: 电容柜

PROJECT: 天津渤化永利丁辛醇项目

= FC1 | SHEET NO 13 | SCALE 1:1 | TOTAL PAGES 13

DRAWING NO XZS1-48353-A01-FC1-S

设备清单(柜体)

序号	设备号	设备名称	物料号	数量	制造商	型号	设备参数
1	-BAD	电容分压装置	DIK-06-B06N1000C-1	3	/	B06N-1000C-1	Un=6kV
2	-BCN	零序电流互感器	CTZ-GLMZ2150501-A1	1	ABB	LMZ215-80-120	50/1A,CORE:2VA/10P10,120mm
3	-BCT1	电流互感器	CTA-G1K314-0250	1	ABB	LZZBJ9-12/150b/2	31.5KA/4SEC,1000/1A,C1:0.5/20VA;C2:5P20/20VA;
4	-BCT2	电流互感器	CTA-G1K314-0250	1	ABB	LZZBJ9-12/150b/2	31.5KA/4SEC,1000/1A,C1:0.5/20VA;C2:5P20/20VA;
5	-BCT3	电流互感器	CTA-G1K314-0250	1	ABB	LZZBJ9-12/150b/2	31.5KA/4SEC,1000/1A,C1:0.5/20VA;C2:5P20/20VA;
6	-EA2	LED电缆室照明灯	L-CL10-1C-W-AA-CA	1	PEAKS	CL10-1C-W-AA	AC198-242V
7	-EB2	加热器	EP-HEATER-100W	1	SANYANG	1FZEK833B	100W
8	-FA	避雷器	SAS-YH5WR-10/27	3	西安神电	YH5WR-10/27	额定电压:10KV;持续运行电压:8.0KV
9	-QAB	真空断路器	VD4/P-77	1	ABB	VD4	NEW VD4 P(旋转式辅助开关) WITHOUT RL1 WITH 7NO+7NC WITHOUT MT
10	-QCE	接地开关	ET1-BGE2/3	1	ABB	ET1	ET1 WITH BGE2&BGE3
11	-REL1	闭锁电磁铁	EP-MAGNET	1	PEAKS	EM10-S	/

This drawing and information contained thereon is the property of ABB (XIAMEN) Switchgear CO. LTD. and shall not be used, reproduced for any purpose ,or shown to third parties without the written consent of ABB (XIAMEN) Switchgear CO. LTD.

REV.	DESCRIPTION	REV. DATE

DRAWN	XINYU LIU	
CHECKED	Jianjun-Wang	
APPROVED	Yongsheng.Li	
FIRST DATE	2025/4/28	

TITLE 设备清单(柜体)

CONTRACT NO.: 504485024

FUNCTION 电容柜

PROJECT 天津渤化永利丁辛醇项目

= FC1 | SHEET NO 1

SCALE 1:1 | TOTAL PAGES 3

DRAWING NO XZS1-48353-A01-FC1-E

设备清单(低压室面板)

序号	设备号	设备名称	物料号	数量	制造商	型号	设备参数
1	-BCG1	电容器保护	CS-BHYL-04	1	北京四方继保自动化股份有限公司	CSD-221A-G	装置电源：DC220V;电流输入：1A;电压输入：AC100V;
2	-BCM1	就地显示器	RLY-MP58	1	ABB	MP58 （LHMI）	/
3	-PFV1	强制型带电显示器	VIO-DXN-Q-A10-1	1	LEELEN	DXN-Q	DXN-Q 强制型带电显示器UGZS1 3KV/6KV/10kV，辅助电源：AC/DC 220/110V
4	-PFX1	手车位置指示	PIL-ADWZ25-B/2	1	LEELEN	ADWZ25-B/2	98-242V AC/DC,TRUCK POSITION
5	-PFX2	断路器状态指示	PIL-ADWZ25-K/2	1	LEELEN	ADWZ25-K/2	98-242V AC/DC,CB. STATUS
6	-PFX3	接地开关状态指示	PIL-ADWZ25-E/1	1	LEELEN	ADWZ25-E/1	98-242V AC/DC,EARTHING SWITCH STATUS
7	-PMM	多功能表	CS-BHYL-09	1	川泽电气	RISL-E96-5A-N-N-N-N	装置电源：DC220V ;电流输入：1A;电压输入：AC100V
8	-PW1	白色指示灯	LSA-CL2-520C	1	ABB	CL2-520C	Un=220V DC,WHITE
9	-RL10	五防锁	CS-BHYL-08	1	珠海优特电力科技股份有限公司	DNBS-2J	/
10	-SAM	高灵敏避雷器放电计数器	SAK-DJSII-C-11	1	安徽通辰	DJS-II/C	Un=110~220DC/AC 4.5m;3m
11	-SB1	黑色按钮	PBA-CP1-10B-11	1	ABB	CP1-10B-11	1NO+1NC,不带标牌套
12	-SB2	黑色自锁按钮	PBA-CP2-10B-11	1	ABB	CP2-10B-11	1NO+1NC,不带标牌套
13	-SFS31	选择开关	SSJ-E01-2-401	1	JIANGYIN CHANGJIANG	LW38D-164B0339/2PY-DAN-AX	
14	-SFS32	选择开关	SSJ-E02-4-402	1	JIANGYIN CHANGJIANG	LW38D-164N1257/4P-AX	
15	-XLP1	插拔式压板	T-JY3-2	1	UPUN	JY3-2	驼色
16	-XLP2	插拔式压板	T-JY3-2	1	UPUN	JY3-2	驼色
17	-XLP3	插拔式压板	T-JY3-2	1	UPUN	JY3-2	驼色
18	-XLP4	插拔式压板	T-JY3-2	1	UPUN	JY3-2	驼色
19	-XLP5	插拔式压板	T-JY3-2	1	UPUN	JY3-2	驼色
20	-XLP6	插拔式压板	T-JY3-2	1	UPUN	JY3-2	驼色

This drawing and information contained thereon is the property of ABB (XIAMEN) Switchgear CO. LTD. and shall not be used, reproduced for any purpose ,or shown to third parties without the written consent of ABB (XIAMEN) Switchgear CO. LTD.

REV.	DESCRIPTION	REV. DATE

DRAWN	XINYU LIU	TITLE	设备清单(低压室面板)
CHECKED	Jianjun-Wang		
APPROVED	Yongsheng.Li	CONTRACT NO.:	504485024
FIRST DATE	2025/4/28		

FUNCTION: 电容柜

PROJECT: 天津渤化永利丁辛醇项目

= FC1 | SHEET NO 2
SCALE 1:1 | TOTAL PAGES 3
DRAWING NO XZS1-48353-A01-FC1-E

设备清单(低压室)

序号	设备号	设备名称	物料号	数量	制造商	型号	设备参数
1	-BGD1	微动开关	EP-LVMS	1	PEAKS	TS11-001-01	MECHANICAL LIFE TIME>1000000TIMES
2	-BR20	TEMPERATURE MONITOR	RLY-MT585	1	ABB	MT585	100-240VDC/AC
3	-BR25	Humidity & Temperature Sensor	1YHT010000P0009	1	/	/	/
4	-EA1	LED低压室照明灯	L-CL10-1C-W-AA	1	PEAKS	CL10-1C-W-AA	SUPPLY: AC198~242V; POWER: <4W
5	-FCM10	微型空气开关	MCBA-202M-C1DC;MBDA-S2C-H11R	1;1	ABB	S202M-C1DC;S2C-H11R	Un=440V DC,In=1A,2-POLE
6	-FCM20	微型空气开关	MCBA-202M-C3DC;MBDA-S2C-H11R	1;1	ABB	S202M-C3DC;S2C-H11R	Un=440V DC,In=3A,2-POLE
7	-FCM30	微型空气开关	MCBA-202M-C3DC;MBDA-S2C-H11R	1;1	ABB	S202M-C3DC;S2C-H11R	Un=440V DC,In=3A,2-POLE
8	-FCM65	微型空气开关	MCBA-2030001R0014;MBDA-S2C-H11R	1;1	ABB	S203-C1;S2C-H11R	Un=400V AC,In=1A,3-POLE
9	-FCM66	微型空气开关	MCBA-2030001R0014;MBDA-S2C-H11R	1;1	ABB	S203-C1;S2C-H11R	Un=400V AC,In=1A,3-POLE
10	-FCM90	微型空气开关	MCBA-2010001R0034;MBDA-S2C-H11R	1;1	ABB	S201-C3;S2C-H11R	Un=230V AC,In=3A,1-POLE
11	-KFC1	中间继电器	RLY-CRMX220DC4	1	ABB	CRMX220DC4	CR-MX220DC4,UN=220V DC

This drawing and information contained thereon is the property of ABB (XIAMEN) Switchgear CO. LTD. and shall not be used, reproduced for any purpose ,or shown to third parties without the written consent of ABB (XIAMEN) Switchgear CO. LTD.

REV.	DESCRIPTION	REV. DATE

DRAWN	XINYU LIU	TITLE	设备清单(低压室)
CHECKED	Jianjun-Wang		
APPROVED	Yongsheng.Li	CONTRACT NO.:	504485024
FIRST DATE	2025/4/28		

FUNCTION: 电容柜

PROJECT: 天津渤化永利丁辛醇项目

= FC1 | SHEET NO 3
SCALE 1:1 | TOTAL PAGES 3
DRAWING NO XZS1-48353-A01-FC1-E

REV.	DESCRIPTION	REV. DATE

This drawing and information contained thereon is the property of ABB (XIAMEN) Switchgear CO. LTD. and shall not be used, reproduced for any purpose ,or shown to third parties without the written consent of ABB (XIAMEN) Switchgear CO. LTD.

==A01=FC1+-X1

备注	外引电缆	设备	线号	端子号	型号	线号	设备	外引电缆	备注
		-FCM10:4		1	NEK4		-QAB:25		
				2	NEK4		-QAB:24		
		-FCM10:2		3	NEK4		-QAB:35		
				4	NEK4		-PW1:x2		
				5	NEK4		-KFC1:A2		
		-QAB:34		6	NEK4		-PW1:x1		
				7	NEK4		-KFC1:A1		

☆ 柜间小母线,随柜提供

△ 柜间控制电路(由客户自备)

短接排

分隔板

(测试短接片

O 其他

REV.	DESCRIPTION	REV. DATE		
		DRAWN	XINYU LIU	TITLE
		CHECKED	Jianjun-Wang	端子图表 ==A01=FC1+-X1
		APPROVED	Yongsheng.Li	CONTRACT NO.:
		FIRST DATE	2025/4/28	504485024

FUNCTION 电容柜

PROJECT 天津渤化永利丁辛醇项目

=	FC1	SHEET NO	1
SCALE	1:1	TOTAL PAGES	12
DRAWING NO	XZS1-48353-A01-FC1-T		

REV.	DESCRIPTION	REV. DATE

This drawing and information contained thereon is the property of ABB (XIAMEN) Switchgear CO. LTD. and shall not be used, reproduced for any purpose ,or shown to third parties without the written consent of ABB (XIAMEN) Switchgear CO. LTD.

==A01=FC1+-X2

备注	外引电缆	设备	线号	端子号	型号	线号	设备	外引电缆	备注
		-FCM20:4		● 1	NEK4		-QAB:11		
				● 2	NEK4		-QCE:BGE2/42		
				● 3	NEK4		-BR20:1		
				● 4	NEK4		-PMM:L+		
				● 5	NEK4		-SAM:P2/01		
				● 6	NEK4		-BCG1:X1/c24		
				● 7	NEK4		-QAB:26		
				● 8	NEK4				
				● 9	NEK4		-XLP3:1		
				● 10	NEK4				
				● 11	NEK4		-SFS32:11		
				● 12	NEK4		-SB1:13		
				● 13	NEK4				
				● 14	NEK4		-QAB:8		
				● 15	NEK4		-QAB:5		
				● 16	NEK4		-FCM90:11		
				● 17	NEK4		-QAB:52		
				● 18	NEK4		-QCE:BGE2/40		
	△	-邻柜继保装置故障		● 19	NEK4				
	△	-电容器门开		● 20	NEK4				
				● 21	NEK4				
				● 22	NEK4				
				● 23	NEK4				
				● 24	NEK4				
				×					
		-FCM20:2		● 25	NEK4		-PFX2:1		
				● 26	NEK4		-BR20:2		
				● 27	NEK4		-PMM:N-		
				● 28	NEK4		-SAM:P2/03		
				● 29	NEK4		-BCG1:X1/c28		
				● 30	NEK4		-BCG1:X1/c12		
				● 31	NEK4		-BCG1:X3/c32		
				● 32	NEK4				
				×					
		-QAB:21		33	NEK4		-PFX2:3		
		-QAB:22		34	NEK4		-PFX2:2		
		-QAB:51		35	NEK4		-PFX1:3		
		-QAB:50		36	NEK4		-PFX1:2		
		-QCE:BGE2/43		37	NEK4		-PFX3:3		
		-QCE:BGE3/23		38	NEK4		-PFX3:2		
		-QAB:36		39	NEK4		-BCG1:X1/a2		
				40	NEK4		-BCG1:X1/a4		
				41	NEK4		-BCG1:X1/a6		
				42	NEK4		-BCG1:X1/a10		
				43	NEK4		-BCG1:X1/a12		
				44	NEK4		-BCG1:X1/c2		
		-QAB:18		45	NEK4		-BCG1:X3/a20		
		-QAB:15		46	NEK4		-BCG1:X3/a22		
		-FCM10:11		47	RCT4SW		-FCM90:11		
		-FCM66:12		48	NEK4		-BCG1:X3/a24		
		-QAB:54		49	NEK4		-BCG1:X3/a26		
		-QAB:53		50	NEK4		-BCG1:X3/a28		
		-QCE:BGE2/41		51	NEK4		-BCG1:X3/a30		
		-QCE:BGE3/21		52	NEK4		-BCG1:X3/a32		
	△	-邻柜继保装置故障		53	NEK4		-BCG1:X3/c20		
	△	-电容器门开		54	NEK4		-BCG1:X3/c22		

☆ 柜间小母线,随柜提供

△ 柜间控制电路(由客户自备)

短接排

× 分隔板

(测试短接片

O 其他

DRAWN	XINYU LIU	TITLE
CHECKED	Jianjun-Wang	端子图表 ==A01=FC1+-X2
APPROVED	Yongsheng.Li	CONTRACT NO.:
FIRST DATE	2025/4/28	504485024
REV. DATE		
DESCRIPTION		

FUNCTION 电容柜

PROJECT 天津渤化永利丁辛醇项目

=	FC1	SHEET NO.	2
SCALE	1:1	TOTAL PAGES	12

DRAWING NO. XZS1-48353-A01-FC1-T

==A01=FC1+-X2

备注	外引电缆	设备	线号	型号	端子号	线号	设备	备注
		-BCG1:X3/c24		NEK4	1 55			
		-BCG1:X3/c26		NEK4	1 56			
		-BCG1:X3/c28		NEK4	1 57			
		-BCG1:X3/c30		NEK4	1 58			
		-XLP6:1		NEK4	1 59			
		-XLP6:2		NEK4	1 60			

☆ 柜间小母线,厢柜提供

△ 柜间控制电路(由客户自备)

短接排

分隔板

测试短接片

其他

This drawing and information contained thereon is the property of ABB (XIAMEN) Switchgear CO. LTD. and shall not be used, reproduced for any purpose ,or shown to third parties without the written consent of ABB (XIAMEN) Switchgear CO. LTD.

REV.	DESCRIPTION	REV. DATE

DRAWN	XINYU LIU	TITLE	端子图表 ==A01=FC1+-X2
CHECKED	Jianjun-Wang		
APPROVED	Yongsheng.Li	CONTRACT NO.:	504485024
FIRST DATE	2025/4/28		

FUNCTION: 电容柜

PROJECT: 天津渤化永利丁辛醇项目

= FC1 | SHEET NO 2.a | SCALE 1:1 | TOTAL PAGES 12

DRAWING NO XZS1-48353-A01-FC1-T

REV.	DESCRIPTION	REV. DATE

This drawing and information contained thereon is the property of ABB (XIAMEN) Switchgear CO. LTD. and shall not be used, reproduced for any purpose ,or shown to third parties without the written consent of ABB (XIAMEN) Switchgear CO. LTD.

==A01=FC1+-X3

备注	外引电缆	设备	线号	端子号	型号	线号	设备	外引电缆	备注
				1	NEK4		-FCM30:4		
				2	NEK4				
				3	NEK4				
				4	NEK4		-RL10:+		
				5	NEK4		-SFS32:3		
	△	-电容器跳闸		6	NEK4				
				7	NEK4				
				8	NEK4		-BCG1:X2/c2		
				9	NEK4		-BCG1:X2/c10		
				10	NEK4		-PFV1:220V		
				11	NEK4				
		-FCM30:2		12	NEK4		-QAB:14		
				13	NEK4		-QAB:30		
				14	NEK4		-BCG1:X2/c22		
				15	NEK4		-PFV1:0V		
				16	NEK4		-REL1:E2		
				17	NEK4				
				18	NEK4		-QAB:49		
	△	-电容器门关		19	NEK4				
				20	NEK4		-X3:27		
	△	-电容器门关		21	NEK4				
				22	NEK4		-QAB:10		
		-QAB:32		23	NEK4		-QAB:4		
				24	NEK4				
		-BCG1:X2/c18		25	NEK4		-SFS31:4		
				26	NEK4		-BCG1:X2/a6		
		-X3:20		27	NEK4		-BCG1:X2/a18		
		-QAB:42		28	NEK4		-BCG1:X2/a16		
				29	NEK4		-BCG1:X2/a20		
				30	NEK4		-BCG1:X2/a4		
		-SFS31:2		31	NEK4		-BCG1:X2/c16		
				32	NEK4				
	△	-电容器跳闸		33	NEK4		-BCG1:X2/c14		
				34	NEK4				
				35	NEK4				
				36	NEK4		-BCG1:X2/c20		
		-BCG1:X2/c12		37	NEK4		-XLP2:2		
				38	NEK4				
				39	NEK4				
		-QAB:31		40	NEK4		-BCG1:X2/a14		
				41	NEK4		-BCG1:X2/a12		
				42	NEK4		-QAB:41		
		-PFV1:COM		43	NEK4		-REL1:E1		
				44	NEK4		-BCG1:X2/c6		

☆ 柜间小母线,随柜提供

△ 柜间控制电路(由客户自备)

短接排

✕ 分隔板

(测试短接片

O 其他

REV.		
DESCRIPTION		
REV. DATE		
DRAWN	XINYU LIU	TITLE
CHECKED	Jianjun-Wang	
APPROVED	Yongsheng.Li	CONTRACT NO.:
FIRST DATE	2025/4/28	

端子图表 ==A01=FC1+-X3

504485024

FUNCTION 电容柜

PROJECT 天津渤化永利丁辛醇项目

=	FC1	SHEET NO.	3
SCALE	1:1	TOTAL PAGES	12
DRAWING NO.	XZS1-48353-A01-FC1-T		

REV.	DESCRIPTION	REV. DATE

This drawing and information contained thereon is the property of ABB (XIAMEN) Switchgear CO. LTD. and shall not be used, reproduced for any purpose ,or shown to third parties without the written consent of ABB (XIAMEN) Switchgear CO. LTD.

==A01=FC1+-X4

备注	外引电缆	设备	线号	端子号	型号	线号	设备	外引电缆	备注
		-BCT1:1S1		1	NEK6S		-PMM:IA		
		-BCT1:1S2		2	NEK6S		-BCG1:X6/b5		
		-BCT2:1S1		3	NEK6S		-PMM:IB		
		-BCT2:1S2		4	NEK6S		-BCG1:X6/b6		
		-BCT3:1S1		5	NEK6S		-PMM:IC		
		-BCT3:1S2		6	NEK6S		-BCG1:X6/b7		
		-GND		7	NEK6S				
		-BCT1:2S1		8	NEK6S		-BCG1:X6/a1		
		-BCT1:2S2		9	NEK6S		-BCG1:X6/b1		
		-BCT2:2S1		10	NEK6S		-BCG1:X6/a2		
		-BCT2:2S2		11	NEK6S		-BCG1:X6/b2		
		-BCT3:2S1		12	NEK6S		-BCG1:X6/a3		
		-BCT3:2S2		13	NEK6S		-BCG1:X6/b3		
		-GND		14	NEK6S				
		-BCN:S1		15	NEK6S		-BCG1:X6/a4		
		-BCN:S2		16	NEK6S		-综合选线装置	△	
		-GND		17	NEK6S				
		-BCG1:X6/b4		18	NEK6S		-综合选线装置	△	
				19	NEK6S				
				20	NEK6S				
				21	NEK6S				

☆ 柜间小母线,随柜提供

△ 柜间控制电路(由客户自备)

短接排

✕ 分隔板

(测试短接片

O 其他

REV.	DESCRIPTION	REV. DATE

DRAWN	XINYU LIU	
CHECKED	Jianjun-Wang	
APPROVED	Yongsheng.Li	
FIRST DATE	2025/4/28	

TITLE 端子图表 ==A01=FC1+-X4

CONTRACT NO.: 504485024

FUNCTION 电容柜

PROJECT 天津渤化永利丁辛醇项目

=	FC1
SCALE	1:1
SHEET NO	4
TOTAL PAGES	12
DRAWING NO	XZS1-48353-A01-FC1-T

REV.	DESCRIPTION	REV. DATE

This drawing and information contained thereon is the property of ABB (XIAMEN) Switchgear CO. LTD. and shall not be used, reproduced for any purpose ,or shown to third parties without the written consent of ABB (XIAMEN) Switchgear CO. LTD.

==A01=FC1+-X5

备注	外引电缆	设备	线号	端子号	型号	线号	设备	外引电缆	备注
				1	NEK4		-KFC1:14		
				2	NEK4		-KFC1:11		
				3	NEK4		-QAB:9		
				4	NEK4		-QAB:19		
				5	NEK4		-QAB:28		
				6	NEK4		-QAB:38		
				7	NEK4		-QAB:29		
				8	NEK4		-QAB:39		
				9	NEK4		-QAB:27		
				10	NEK4		-QAB:37		
				11	NEK4		-QAB:2		
				12	NEK4		-QAB:3		
				13	NEK4		-QAB:13		
				14	NEK4		-QAB:6		
				15	NEK4		-QAB:16		
				16	NEK4		-QAB:7		
				17	NEK4		-QAB:17		
				18	NEK4		-QAB:23		
				19	NEK4		-QAB:33		
				20	NEK4		-QAB:55		
				21	NEK4		-QAB:56		
				22	NEK4		-QAB:48		
				23	NEK4		-QAB:12		
				24	NEK4		-QAB:47		
				25	NEK4		-QAB:57		
				26	NEK4		-QAB:58		
	△	-电容器本体		27	NEK4		-QCE:BGE2/44		
	△	-电容器本体		28	NEK4		-QCE:BGE2/45		
				29	NEK4		-QCE:BGE2/46		
				30	NEK4		-QCE:BGE2/47		
				31	NEK4		-QCE:BGE3/24		
				32	NEK4		-QCE:BGE3/25		
				33	NEK4		-QCE:BGE3/26		
				34	NEK4		-QCE:BGE3/27		
				35	NEK4		-SFS32:5		
				36	NEK4		-SFS32:6		
				37	NEK4		-SFS32:7		
				38	NEK4		-SFS32:8		
				39	NEK4		-FCM20:11		
				40	NEK4		-FCM20:12		
				41	NEK4		-SAM:P1/03		
				42	NEK4		-SAM:P1/04		
				43	NEK4		-BCG1:X2/c28		
				44	NEK4		-BCG1:X2/c32		
				45	NEK4		-BCG1:X2/c30		
				46	NEK4		-BCG1:X1/a22		
				47	NEK4		-BCG1:X1/a20		
				48	NEK4		-BCG1:X1/a18		
	△	-至邻柜继保BI		49	NEK4		-BCG1:X1/a14		
	△	-至邻柜继保BI		50	NEK4		-BCG1:X1/a16		
				51	NEK4		-BR20:4		
				52	NEK4		-BR25:V+		
				53	NEK4		-BR20:5		
				54	NEK4		-BR25:V-		

☆ 柜间小母线,随柜提供

△ 柜间控制电路(由客户自备)

短接排

✕ 分隔板

(测试短接片

O 其他

REV.	DESCRIPTION	REV. DATE

DRAWN XINYU LIU
CHECKED Jianjun-Wang
APPROVED Yongsheng.Li
FIRST DATE 2025/4/28

TITLE 端子图表 ==A01=FC1+-X5

CONTRACT NO.: 504485024

FUNCTION 电容柜

PROJECT 天津渤化永利丁辛醇项目

= FC1
SCALE 1:1
SHEET NO. 5
TOTAL PAGES 12
DRAWING NO. XZS1-48353-A01-FC1-T

==A01=FC1+-X5

备注	外引电缆	设备	线号	型号	端子号	线号	设备	备注	外引电缆	设备	线号	型号	端子号	线号	设备	备注
				NEK4	55							NEK4	55			
				NEK4	56							NEK4	56			
				NEK4	57							NEK4	57			
				NEK4	58							NEK4	58			
				NEK4	59							NEK4	59			
				NEK4	60							NEK4	60			
				NEK4	61							NEK4	61			
				NEK4	62							NEK4	62			
				NEK4	63							NEK4	63			
				NEK4	64							NEK4	64			

☆ 柜间小母线,厢柜提供

△ 柜间控制电路(由客户自备)

短接排

分隔板

测试短接片

其他

This drawing and information contained thereon is the property of ABB (XIAMEN) Switchgear CO. LTD. and shall not be used, reproduced for any purpose ,or shown to third parties without the written consent of ABB (XIAMEN) Switchgear CO. LTD.

REV.	DESCRIPTION	REV. DATE

DRAWN	XINYU LIU	TITLE	端子图表 ==A01=FC1+-X5
CHECKED	Jianjun-Wang		
APPROVED	Yongsheng.Li	CONTRACT NO.:	504485024
FIRST DATE	2025/4/28		

FUNCTION: 电容柜

PROJECT: 天津渤化永利丁辛醇项目

= FC1 | SHEET NO 5.a

SCALE 1:1 | TOTAL PAGES 12

DRAWING NO XZS1-48353-A01-FC1-T

REV.	DESCRIPTION	REV. DATE

This drawing and information contained thereon is the property of ABB (XIAMEN) Switchgear CO. LTD. and shall not be used, reproduced for any purpose ,or shown to third parties without the written consent of ABB (XIAMEN) Switchgear CO. LTD.

==A01=FC1+-X6

备注	外引电缆	设备	线号	端子号	型号	线号	设备	外引电缆	备注
		-FCM65:2		1	NEK4		-BCG1:X6/a8		
		-FCM65:4		2	NEK4		-BCG1:X6/a9		
		-FCM65:6		3	NEK4		-BCG1:X6/a10		
		-X13:4		4	NEK4		-BCG1:X6/b8		
				5	NEK4		-BCG1:X6/a11		
				6	NEK4		-BCG1:X6/b11		
				7	NEK4		-BCG1:X7/a1		
				8	NEK4		-BCG1:X7/b1		
				9	NEK4		-BCG1:X7/a2		
				10	NEK4		-BCG1:X7/b2		
		-FCM66:2		11	NEK4		-PMM:UA		
		-FCM66:4		12	NEK4		-PMM:UB		
		-FCM66:6		13	NEK4		-PMM:UC		
		-X13:10		14	NEK4		-PMM:UN		
	△	-电容器电压采集		15	NEK4		-X13:2		
	△	-电容器电压采集		16	NEK4		-X13:3		

☆ 柜间小母线,随柜提供

△ 柜间控制电路(由客户自备)

短接排

分隔板

(测试短接片

O 其他

REV.	DESCRIPTION	REV. DATE

DRAWN	XINYU LIU	TITLE
CHECKED	Jianjun-Wang	端子图表 ==A01=FC1+-X6
APPROVED	Yongsheng.Li	CONTRACT NO.:
FIRST DATE	2025/4/28	504485024

FUNCTION 电容柜

PROJECT 天津渤化永利丁辛醇项目

=	FC1	SHEET NO	6
SCALE	1:1	TOTAL PAGES	12
DRAWING NO	XZS1-48353-A01-FC1-T		

REV.	DESCRIPTION	REV. DATE

This drawing and information contained thereon is the property of ABB (XIAMEN) Switchgear CO. LTD. and shall not be used, reproduced for any purpose ,or shown to third parties without the written consent of ABB (XIAMEN) Switchgear CO. LTD.

==A01=FC1+-X9

备注	外引电缆	设备	线号	端子号	型号	线号	设备	外引电缆	备注
				● 1	NEK4		-EB2:1		
				● 2	NEK4		-SB2:13		
		-FCM90:2		● 3	NEK4		-BGD1:1		
				● 4	NEK4		-EB2:2		
				● 5	NEK4		-EA2:A2		
		-X11:4		● 6	NEK4		-EA1:A2		
		-SB2:14		- 7	NEK4		-EA2:A1		
		-EA1:A1		8	RCT4SW		-BGD1:2		

☆ 柜间小母线,随柜提供

△ 柜间控制电路(由客户自备)

短接排

✕ 分隔板

(测试短接片

O 其他

REV.	DESCRIPTION	REV. DATE

DRAWN	XINYU LIU	TITLE
CHECKED	Jianjun-Wang	端子图表 ==A01=FC1+-X9
APPROVED	Yongsheng.Li	CONTRACT NO.:
FIRST DATE	2025/4/28	504485024

FUNCTION 电容柜

PROJECT 天津渤化永利丁辛醇项目

=	FC1	SHEET NO. 7
SCALE	1:1	TOTAL PAGES 12
DRAWING NO.	XZS1-48353-A01-FC1-T	

REV.	DESCRIPTION	REV. DATE

This drawing and information contained thereon is the property of ABB (XIAMEN) Switchgear CO. LTD. and shall not be used, reproduced for any purpose ,or shown to third parties without the written consent of ABB (XIAMEN) Switchgear CO. LTD.

==A01=FC1+-X11

备注	外引电缆	设备	线号	端子号	型号	线号	设备	外引电缆	备注
6黑色	☆	-X11.2:1		1	A3C 6		-FCM90:1		
6黑色	☆	-X11.1:1							
6黑色	☆	-X11.2:2		2	A3C 6				
6黑色	☆	-X11.1:2							
6黑色	☆	-X11.2:3		3	A3C 6				
6黑色	☆	-X11.1:3							
6黑色	☆	-X11.2:4		4	A3C 6		-X9:6		
6黑色	☆	-X11.1:4							
6黑色	☆	-X11.2:5		5	A3C 6		-FCM10:3		
6黑色	☆	-X11.1:5							
6黑色	☆	-X11.2:6		6	A3C 6		-FCM10:1		
6黑色	☆	-X11.1:6							
6黑色	☆	-X11.2:7		7	A3C 6		-FCM30:3		
6黑色	☆	-X11.1:7							
6黑色	☆	-X11.2:8		8	A3C 6		-FCM30:1		
6黑色	☆	-X11.1:8							

☆ 柜间小母线,随柜提供

△ 柜间控制电路(由客户自备)

短接排

分隔板

(测试短接片

O 其他

REV.	DESCRIPTION	REV. DATE

DRAWN XINYU LIU
CHECKED Jianjun-Wang
APPROVED Yongsheng.Li
FIRST DATE 2025/4/28

TITLE 端子图表 ==A01=FC1+-X11

CONTRACT NO.: 504485024

FUNCTION 电容柜

PROJECT 天津渤化永利丁辛醇项目

= FC1
SCALE 1:1
SHEET NO. 8
TOTAL PAGES 12
DRAWING NO. XZS1-48353-A01-FC1-T

REV.	DESCRIPTION	REV. DATE

This drawing and information contained thereon is the property of ABB (XIAMEN) Switchgear CO. LTD. and shall not be used, reproduced for any purpose ,or shown to third parties without the written consent of ABB (XIAMEN) Switchgear CO. LTD.

==A01=FC1+-X13

备注	外引电缆	设备	线号	端子号	型号	线号	设备	外引电缆	备注
	☆	-X13.1:1(11)		1	A4C 4		-FCM65:1		
	☆	-X13.2:1							
	☆	-X13.1:2(12)		2	A4C 4		-FCM65:3		
	☆	-X13.2:2					-X6:15		
	☆	-X13.1:3(13)		3	A4C 4		-FCM65:5		
	☆	-X13.2:3					-X6:16		
	☆	-X13.1:4(14)		4	A4C 4		-X6:4		
	☆	-X13.2:4							
	☆	-X13.1:5(15)		5	A4C 4				
	☆	-X13.2:5							
	☆	-X13.1:6(16)		6	A4C 4				
	☆	-X13.2:6							
	☆	-X13.3:7(17)		7	A4C 4		-FCM66:1		
	☆	-X13.4:7							
	☆	-X13.3:8(18)		8	A4C 4		-FCM66:3		
	☆	-X13.4:8							
	☆	-X13.3:9(19)		9	A4C 4		-FCM66:5		
	☆	-X13.4:9							
	☆	-X13.3:10(20)		10	A4C 4		-X6:14		
	☆	-X13.4:10							

☆ 柜间小母线,随柜提供

△ 柜间控制电路(由客户自备)

短接排

分隔板

(测试短接片

O 其他

REV.	DESCRIPTION	REV. DATE

DRAWN	XINYU LIU	TITLE
CHECKED	Jianjun-Wang	端子图表 ==A01=FC1+-X13
APPROVED	Yongsheng.Li	CONTRACT NO.:
FIRST DATE	2025/4/28	504485024

FUNCTION 电容柜

PROJECT 天津渤化永利丁辛醇项目

=	FC1
SCALE	1:1
SHEET NO	9
TOTAL PAGES	12

DRAWING NO XZS1-48353-A01-FC1-T

REV.	DESCRIPTION	REV. DATE

This drawing and information contained thereon is the property of ABB (XIAMEN) Switchgear CO. LTD. and shall not be used, reproduced for any purpose ,or shown to third parties without the written consent of ABB (XIAMEN) Switchgear CO. LTD.

==A01=FC1+-X14

备注	外引电缆	设备	线号	端子号	型号	线号	设备	外引电缆	备注
	☆	-X14:2		1	NEK4		-BR20:10		
	☆	-X14:1		2	NEK4				
	☆	-X14:4		3	NEK4		-BR20:9		
	☆	-X14:3		4	NEK4				
	☆	-X14:6		5	NEK4		-ST1		
	☆	-X14:5		6	NEK4				
	☆	-X14:8		7	NEK4				
	☆	-X14:7		8	NEK4				
	☆	-X14:10		9	NEK4				
	☆	-X14:9		10	NEK4				
	☆	-X14:12		11	NEK4				
	☆	-X14:11		12	NEK4				
				13	NEK4		-BCG1:X4/1		
				14	NEK4		-BCG1:X4/2		
				15	NEK4		-BCG1:X4/3		
				16	NEK4		-SAM:P1/01		
				17	NEK4		-SAM:P1/02		
				18	NEK4		-PMM:A		
				19	NEK4		-PMM:B		
				20	NEK4		-PMM:S		
				21	NEK4		-BR20:7		
				22	NEK4		-BR25:A		
				23	NEK4		-BR20:6		屏蔽双绞线
				24	NEK4		-BR25:B		

☆ 柜间小母线,随柜提供

△ 柜间控制电路(由客户自备)

短接排

✕ 分隔板

(测试短接片

O 其他

DRAWN	XINYU LIU
CHECKED	Jianjun-Wang
APPROVED	Yongsheng.Li
FIRST DATE	2025/4/28
REV. DATE	
REV.	
DESCRIPTION	

TITLE: 端子图表 ==A01=FC1+-X14

CONTRACT NO.: 504485024

FUNCTION: 电容柜

PROJECT: 天津渤化永利丁辛醇项目

=	FC1
SCALE	1:1
SHEET NO.	10
TOTAL PAGES	12
DRAWING NO.	XZS1-48353-A01-FC1-T

单线图

一次设备索引			
设备号	设备名称	数量	物料号
-QAB	真空断路器	1	VD4/P-77
-BCT1	电流互感器	1	CTA-G1K311-0943
-BCT2	电流互感器	1	CTA-G1K311-0943
-BCT3	电流互感器	1	CTA-G1K311-0943
-BAD	电容分压装置	3	DIK-06-B06N1000C-1
-QCE	接地开关	1	ET1-BGE2/3
-FA	避雷器	3	SAS-YH2.5WD-8/18.7
-BCN	零序电流互感器	1	CTZ-GLMZ2150501-A1

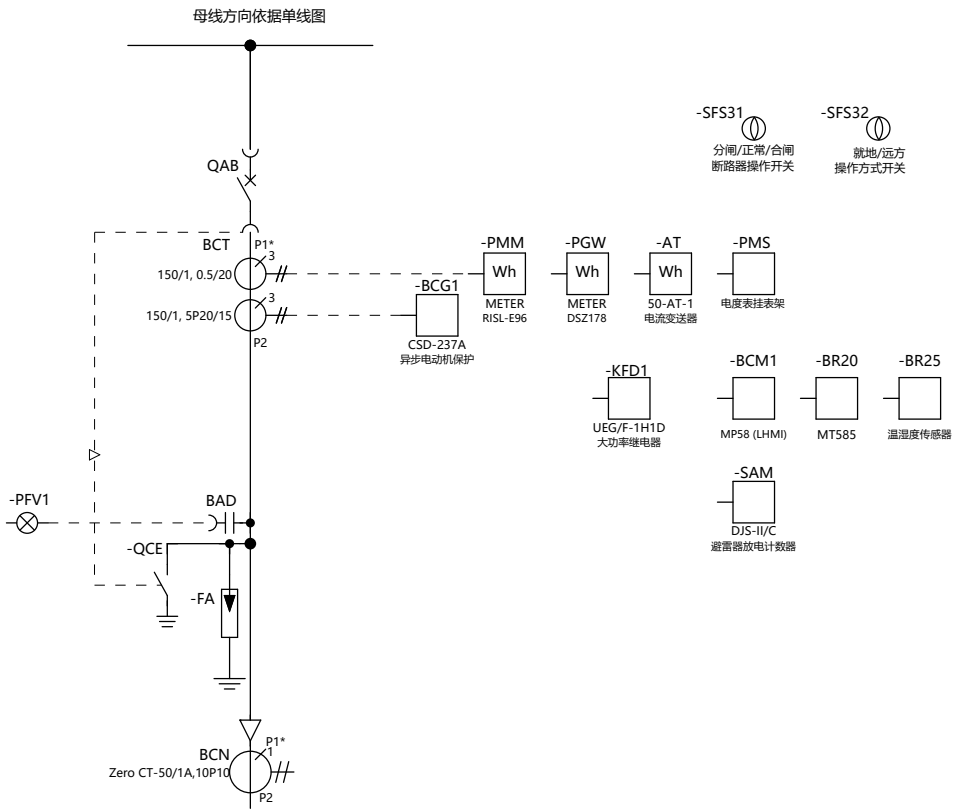

备注：FM1与FM3柜型的原理图相同;
FM1柜宽650mm;FM3柜宽800mm

This drawing and information contained thereon is the property of ABB (XIAMEN) Switchgear CO. LTD. and shall not be used, reproduced for any purpose ,or shown to third parties without the written consent of ABB (XIAMEN) Switchgear CO. LTD.

REV.	DESCRIPTION	REV. DATE

DRAWN	XINYU LIU	TITLE	单线图
CHECKED	Jianjun-Wang		
APPROVED	Yongsheng.Li	CONTRACT NO.:	504485024
FIRST DATE	2025/4/28		

FUNCTION: 电机柜

PROJECT: 天津渤化永利丁辛醇项目

= FM1 | SHEET NO 1
SCALE 1:1 | TOTAL PAGES 14
DRAWING NO XZS1-48353-A01-FM1-S

断路器弹簧储能电机回路	控制回路	保护与信号回路	加热器回路 电缆室 100W	电缆室照明	低压室照明

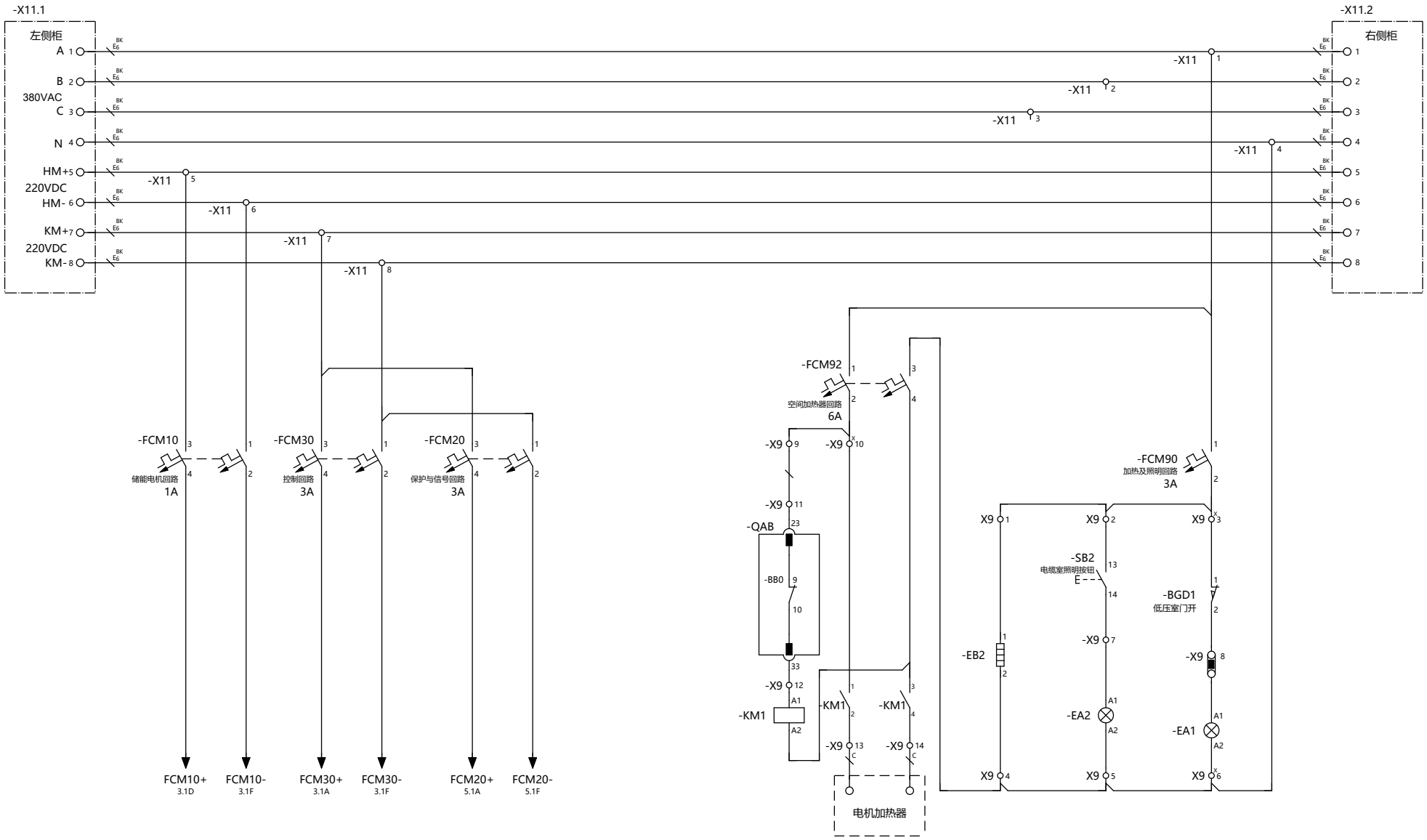

This drawing and information contained thereon is the property of ABB (XIAMEN) Switchgear CO. LTD. and shall not be used, reproduced for any purpose, or shown to third parties without the written consent of ABB (XIAMEN) Switchgear CO. LTD.

REV.	DESCRIPTION	REV. DATE

DRAWN	XINYU LIU	TITLE	电源小母线回路
CHECKED	Jianjun-Wang		
APPROVED	Yongsheng.Li	CONTRACT NO.:	504485024
FIRST DATE	2025/4/28		

ABB

FUNCTION	电机柜
PROJECT	天津渤化永利丁辛醇项目

= FM1	SHEET NO 2
SCALE 1:1	TOTAL PAGES 14
DRAWING NO	XZS1-48353-A01-FM1-S

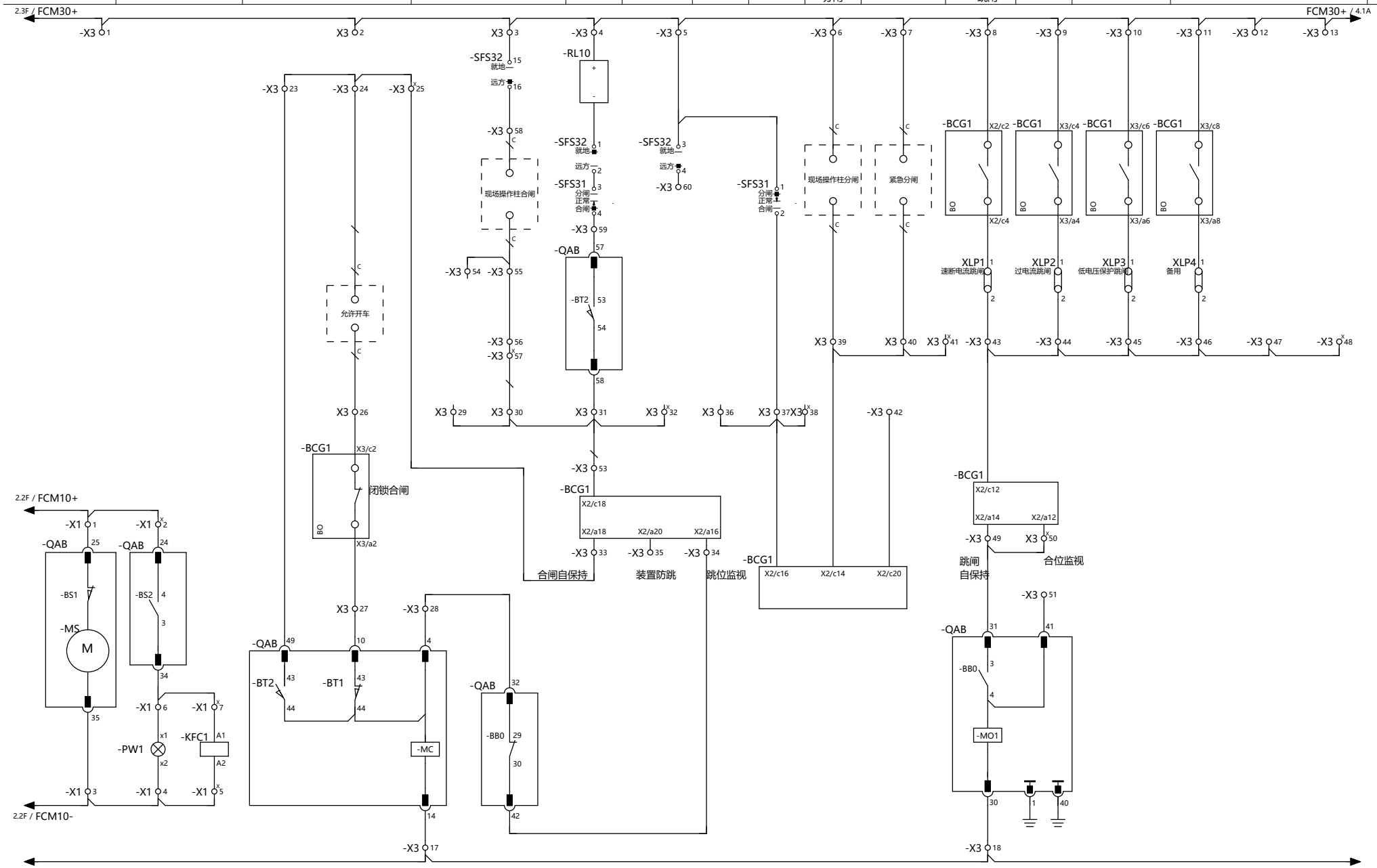

This drawing and information contained thereon is the property of ABB (XIAMEN) Switchgear CO. LTD. and shall not be used, reproduced for any purpose, or shown to third parties without the written consent of ABB (XIAMEN) Switchgear CO. LTD.

REV.	DESCRIPTION	REV. DATE

DRAWN	XINYU LIU	TITLE	控制回路
CHECKED	Jianjun-Wang		
APPROVED	Yongsheng.Li	CONTRACT NO.:	504485024
FIRST DATE	2025/4/28		

ABB

FUNCTION	电机柜
PROJECT	天津渤化永利丁辛醇项目

= FM1	SHEET NO 3
SCALE 1:1	TOTAL PAGES 14
DRAWING NO	XZS1-48353-A01-FM1-S

保护操作电源	带电显示及其闭锁回路

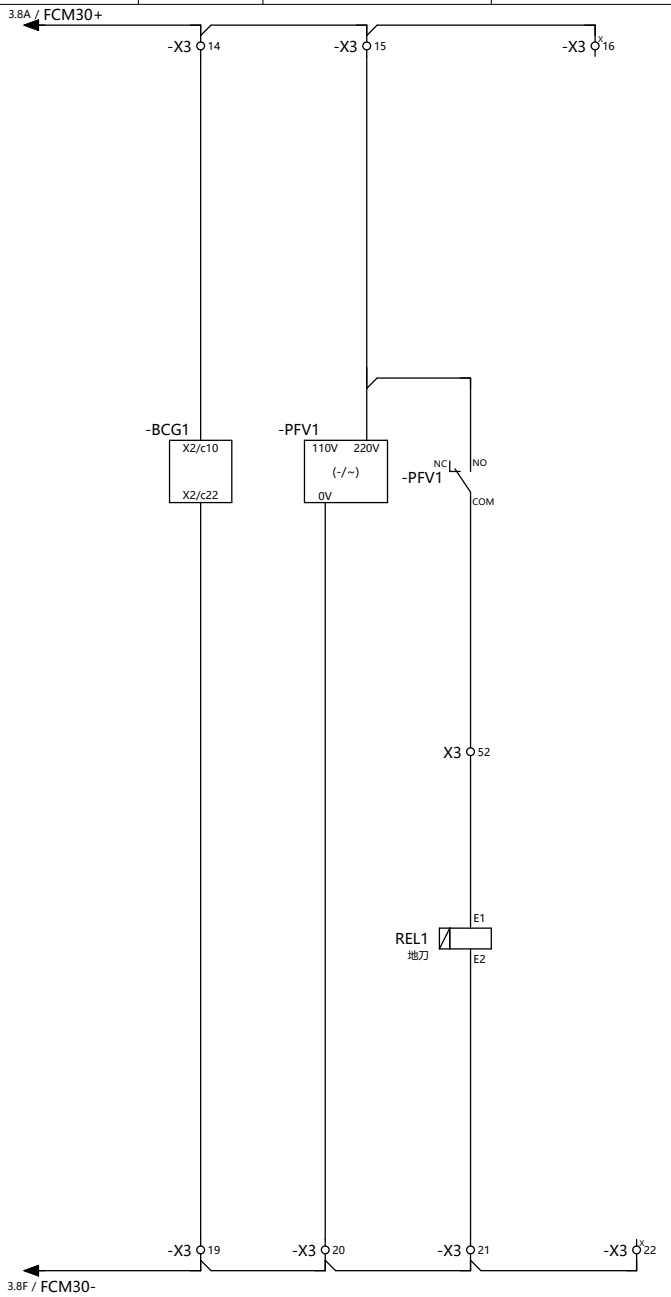

This drawing and information contained thereon is the property of ABB (XIAMEN) Switchgear CO. LTD. and shall not be used, reproduced for any purpose ,or shown to third parties without the written consent of ABB (XIAMEN) Switchgear CO. LTD.

REV.	DESCRIPTION	REV. DATE

DRAWN	XINYU LIU	TITLE	控制回路
CHECKED	Jianjun-Wang		
APPROVED	Yongsheng.Li	CONTRACT NO.:	504485024
FIRST DATE	2025/4/28		

FUNCTION	电机柜
PROJECT	天津渤化永利丁辛醇项目

=	FM1	SHEET NO	4
SCALE	1:1	TOTAL PAGES	14
DRAWING NO	XZS1-48353-A01-FM1-S		

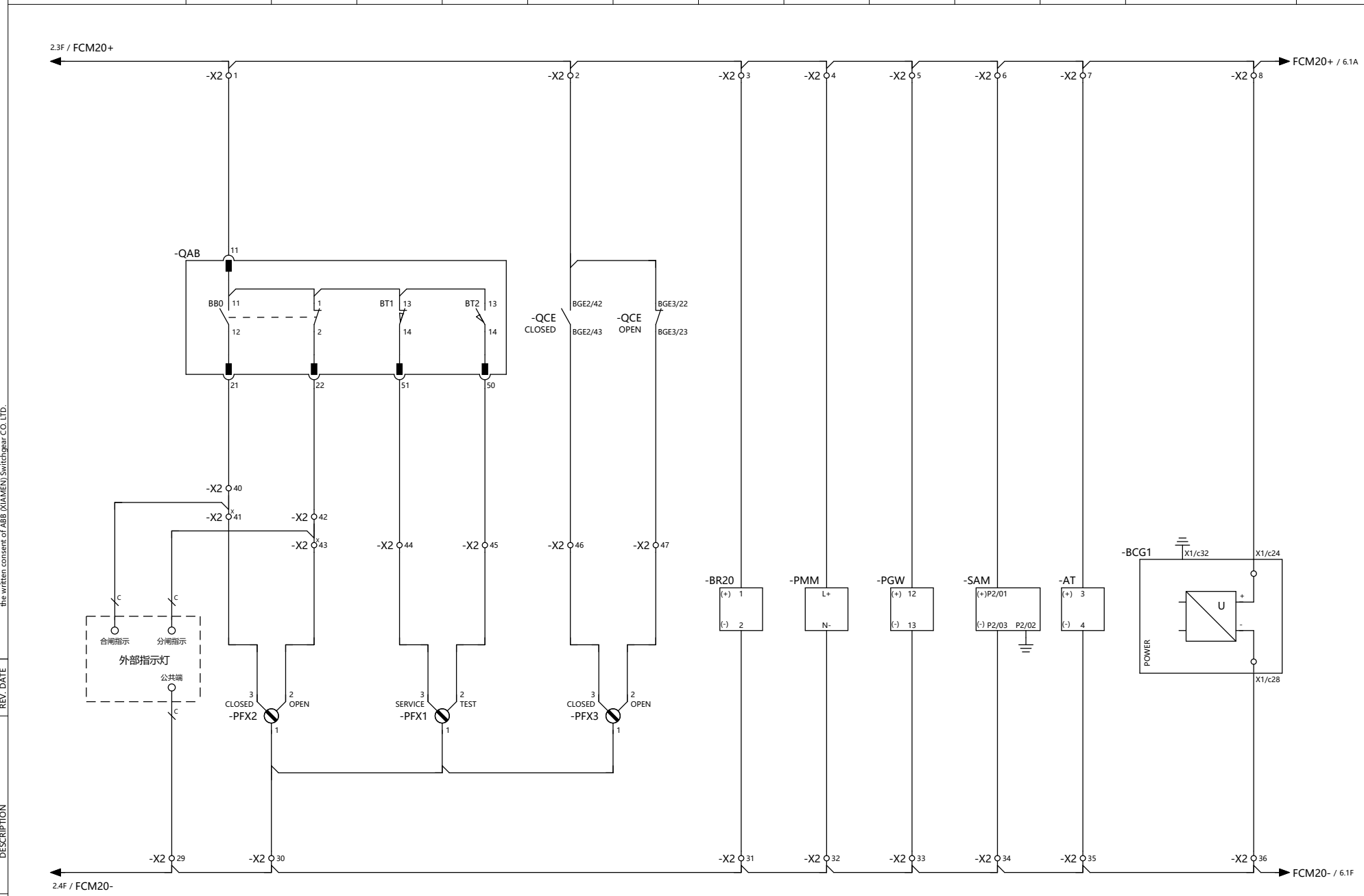

This drawing and information contained thereon is the property of ABB (XIAMEN) Switchgear CO. LTD. and shall not be used, reproduced for any purpose, or shown to third parties without the written consent of ABB (XIAMEN) Switchgear CO. LTD.

REV.	DESCRIPTION	REV. DATE

DRAWN	XINYU LIU	TITLE	保护与信号回路
CHECKED	Jianjun-Wang		
APPROVED	Yongsheng.Li	CONTRACT NO.:	504485024
FIRST DATE	2025/4/28		

ABB

FUNCTION	电机柜
PROJECT	天津渤化永利丁辛醇项目

=	FM1	SHEET NO	5
SCALE	1:1	TOTAL PAGES	14
DRAWING NO	XZS1-48353-A01-FM1-S		

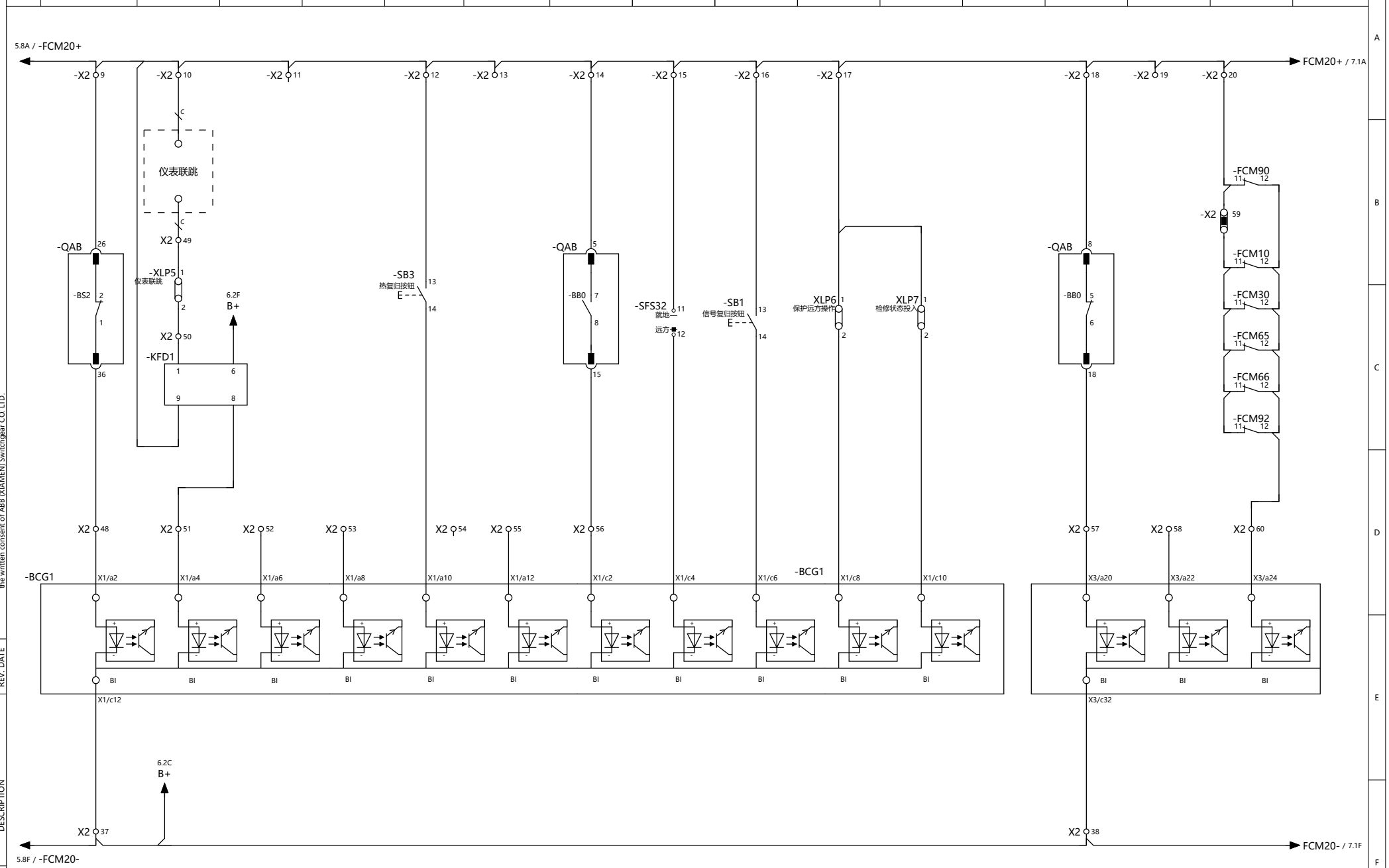

This drawing and information contained thereon is the property of ABB (XIAMEN) Switchgear CO. LTD. and shall not be used, reproduced for any purpose ,or shown to third parties without the written consent of ABB (XIAMEN) Switchgear CO. LTD.

REV.	DESCRIPTION	REV. DATE

DRAWN	XINYU LIU	TITLE	保护与信号回路
CHECKED	Jianjun-Wang		
APPROVED	Yongsheng.Li	CONTRACT NO.:	504485024
FIRST DATE	2025/4/28		

ABB

FUNCTION	电机柜
PROJECT	天津渤化永利丁辛醇项目

=	FM1	SHEET NO	6
SCALE	1:1	TOTAL PAGES	14
DRAWING NO	XZS1-48353-A01-FM1-S		

断路器手车位置		接地开关状态		邻柜继保装置故障	备用
工作	试验	合闸	分闸		

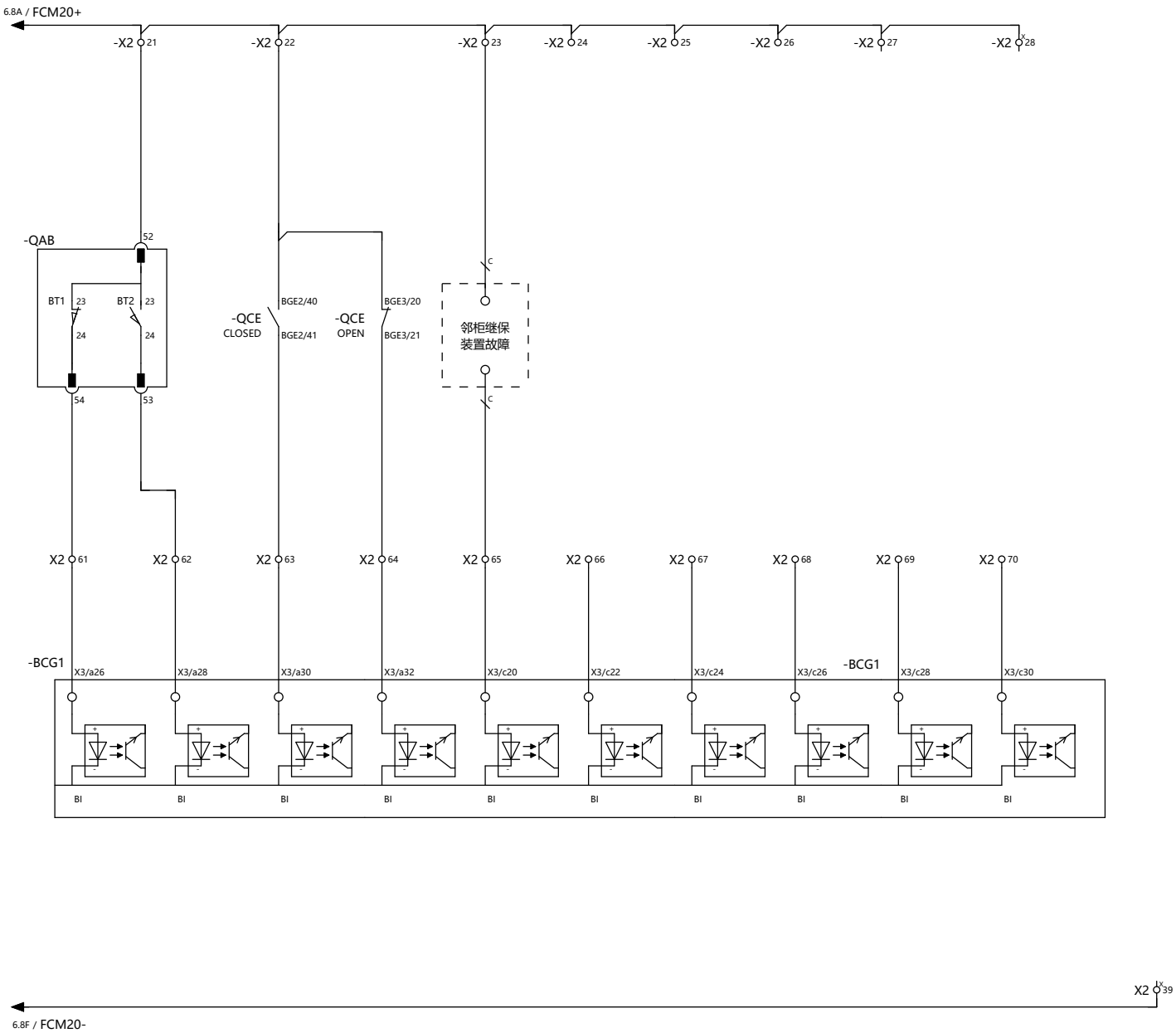

This drawing and information contained thereon is the property of ABB (XIAMEN) Switchgear CO. LTD. and shall not be used, reproduced for any purpose, or shown to third parties without the written consent of ABB (XIAMEN) Switchgear CO. LTD.

REV.	DESCRIPTION	REV. DATE

DRAWN	XINYU LIU	TITLE	保护与信号回路
CHECKED	Jianjun-Wang		
APPROVED	Yongsheng.Li	CONTRACT NO.:	504485024
FIRST DATE	2025/4/28		

FUNCTION: 电机柜

PROJECT: 天津渤化永利丁辛醇项目

= FM1 | SHEET NO 7
SCALE 1:1 | TOTAL PAGES 14
DRAWING NO XZS1-48353-A01-FM1-S

断路器已储能	断路器状态		断路器手车位置		接地开关状态		就地/远方选择开关位置		保护空开信号	避雷器计数器报警信号
	合闸	分闸	工作	试验	合闸	分闸	就地	远方		

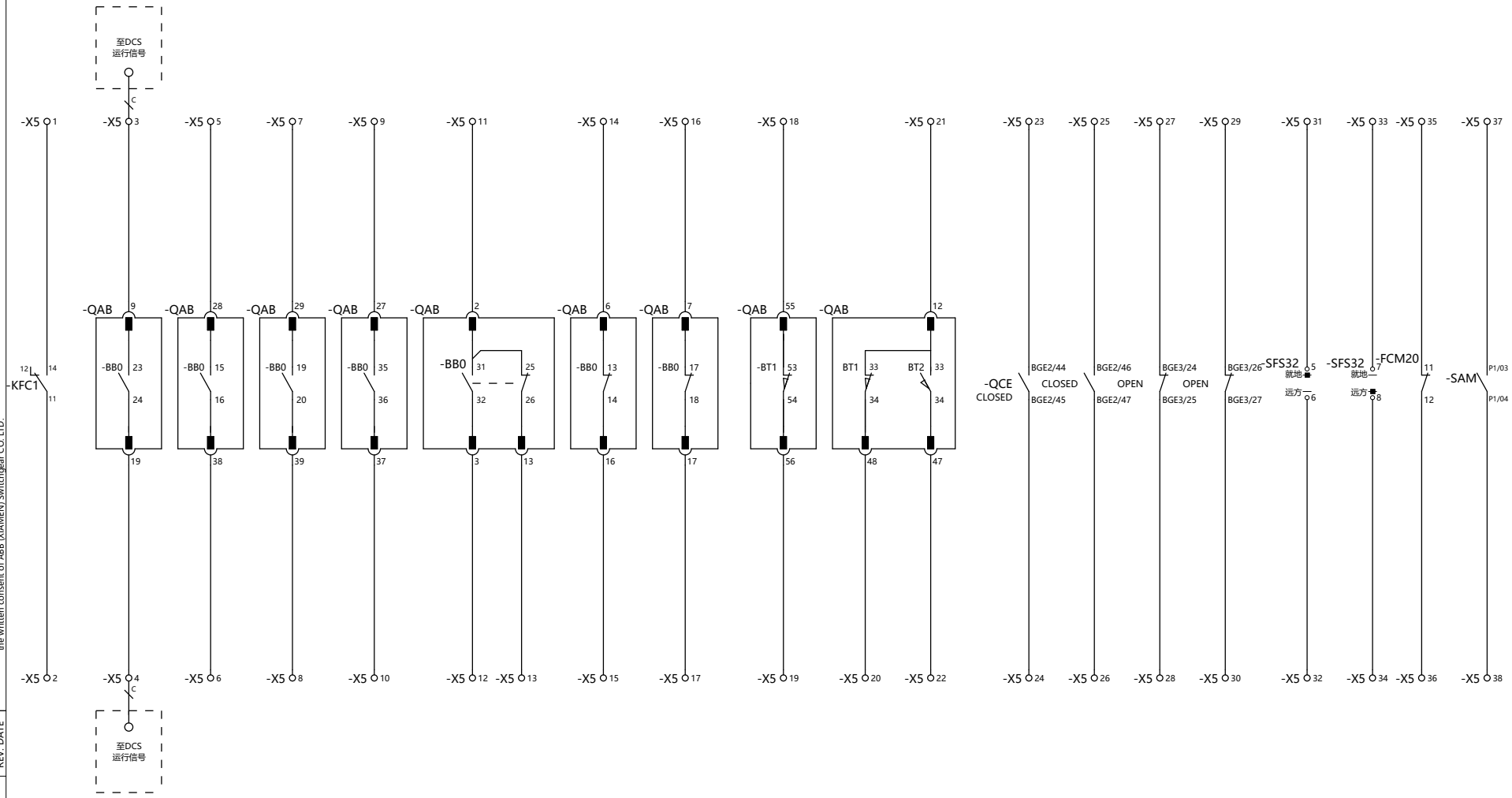

This drawing and information contained thereon is the property of ABB (XIAMEN) Switchgear CO. LTD. and shall not be used, reproduced for any purpose ,or shown to third parties without the written consent of ABB (XIAMEN) Switchgear CO. LTD.

REV.	DESCRIPTION	REV. DATE

DRAWN	XINYU LIU	TITLE	备用回路
CHECKED	Jianjun-Wang		
APPROVED	Yongsheng.Li	CONTRACT NO.:	504485024
FIRST DATE	2025/4/28		

FUNCTION: 电机柜

PROJECT: 天津渤化永利丁辛醇项目

= FM1 | SHEET NO 8

SCALE 1:1 | TOTAL PAGES 14

DRAWING NO XZS1-48353-A01-FM1-S

事故总信号	控制回路断线	备用	非保持信号			远方合闸	远方分闸
			保护动作	运行异常告警	装置故障告警		

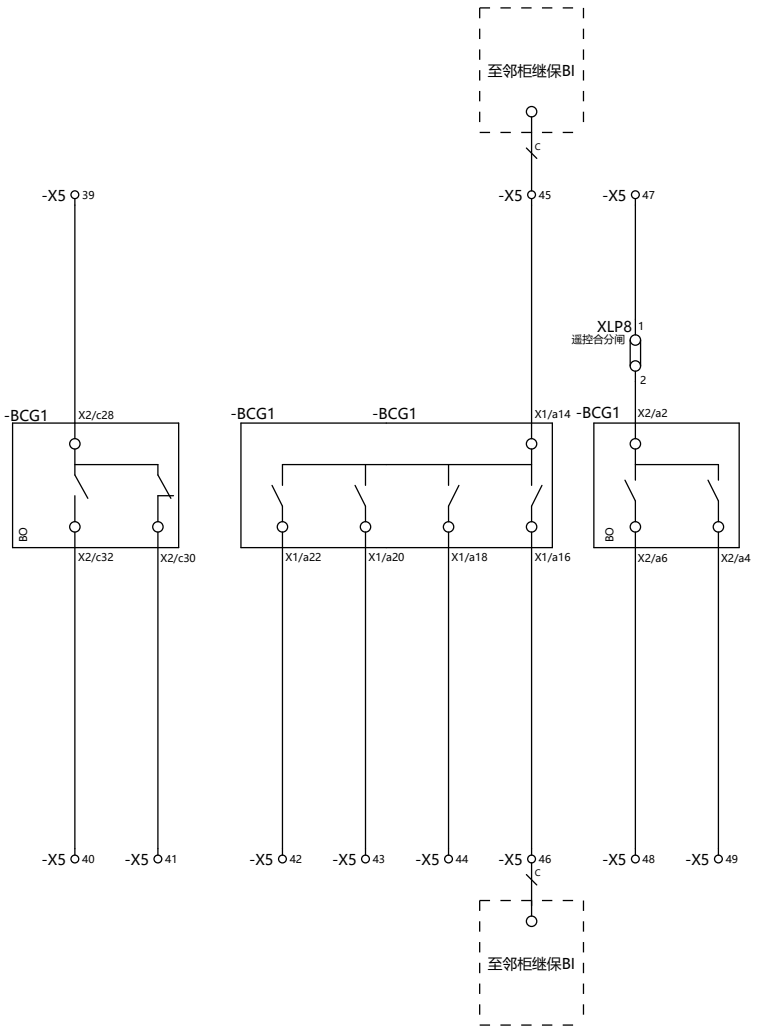

-X5 54 -X5 55 -X5 56 -X5 57 -X5 58

-X5 59 -X5 60 -X5 61 -X5 62 -X5 63

This drawing and information contained thereon is the property of ABB (XIAMEN) Switchgear CO. LTD. and shall not be used, reproduced for any purpose ,or shown to third parties without the written consent of ABB (XIAMEN) Switchgear CO. LTD.

REV.	DESCRIPTION	REV. DATE

DRAWN	XINYU LIU	TITLE	保护备用回路
CHECKED	Jianjun-Wang		
APPROVED	Yongsheng.Li	CONTRACT NO.:	504485024
FIRST DATE	2025/4/28		

FUNCTION: 电机柜

PROJECT: 天津渤化永利丁辛醇项目

= FM1 | SHEET NO 9

SCALE 1:1 | TOTAL PAGES 14

DRAWING NO. XZS1-48353-A01-FM1-S

通讯小母线	保护对时口	避雷器计数器通讯	多功能表485通讯

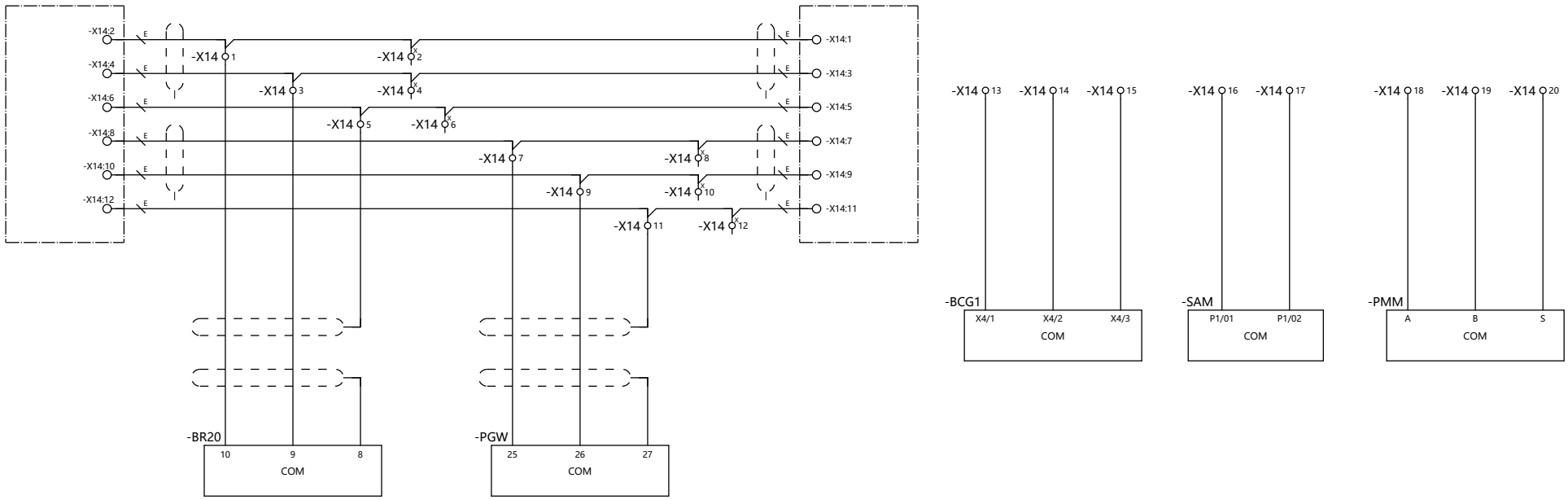

This drawing and information contained thereon is the property of ABB (XIAMEN) Switchgear CO. LTD. and shall not be used, reproduced for any purpose ,or shown to third parties without the written consent of ABB (XIAMEN) Switchgear CO. LTD.

REV.	DESCRIPTION	REV. DATE

DRAWN	XINYU LIU	TITLE	通信回路
CHECKED	Jianjun-Wang		
APPROVED	Yongsheng.Li	CONTRACT NO.:	504485024
FIRST DATE	2025/4/28		

ABB

FUNCTION	电机柜
PROJECT	天津渤化永利丁辛醇项目

=	FM1	SHEET NO	10
SCALE	1:1	TOTAL PAGES	14
DRAWING NO	XZS1-48353-A01-FM1-S		

MT585 24VDC输出	温湿度控制电源	MT585通讯接口 (与MB585通讯接口)	温湿度控制器通讯	HMI 电源及通讯 示意图	电流变送器 4-20mA输出

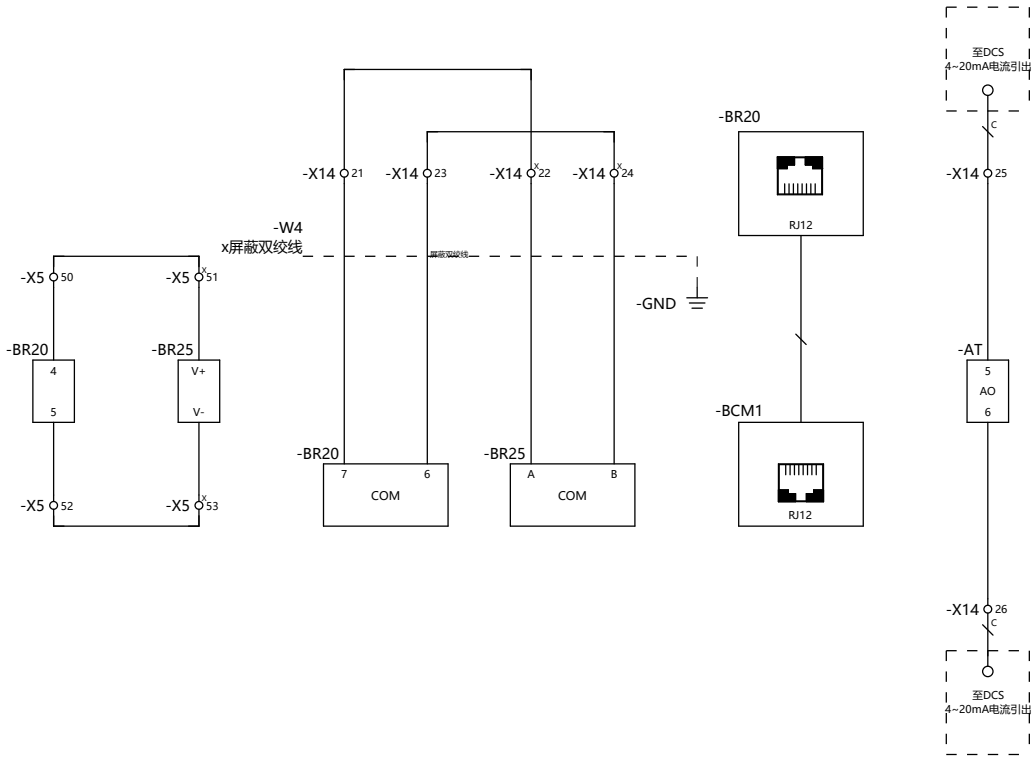

This drawing and information contained thereon is the property of ABB (XIAMEN) Switchgear CO. LTD. and shall not be used, reproduced for any purpose ,or shown to third parties without the written consent of ABB (XIAMEN) Switchgear CO. LTD.

REV.	DESCRIPTION	REV. DATE

DRAWN	XINYU LIU	TITLE	通信回路
CHECKED	Jianjun-Wang		
APPROVED	Yongsheng.Li	CONTRACT NO.:	504485024
FIRST DATE	2025/4/28		

FUNCTION: 电机柜

PROJECT: 天津渤化永利丁辛醇项目

= FM1 | SHEET NO 11
SCALE 1:1 | TOTAL PAGES 14
DRAWING NO XZS1-48353-A01-FM1-S

电压小母线

计量小母线

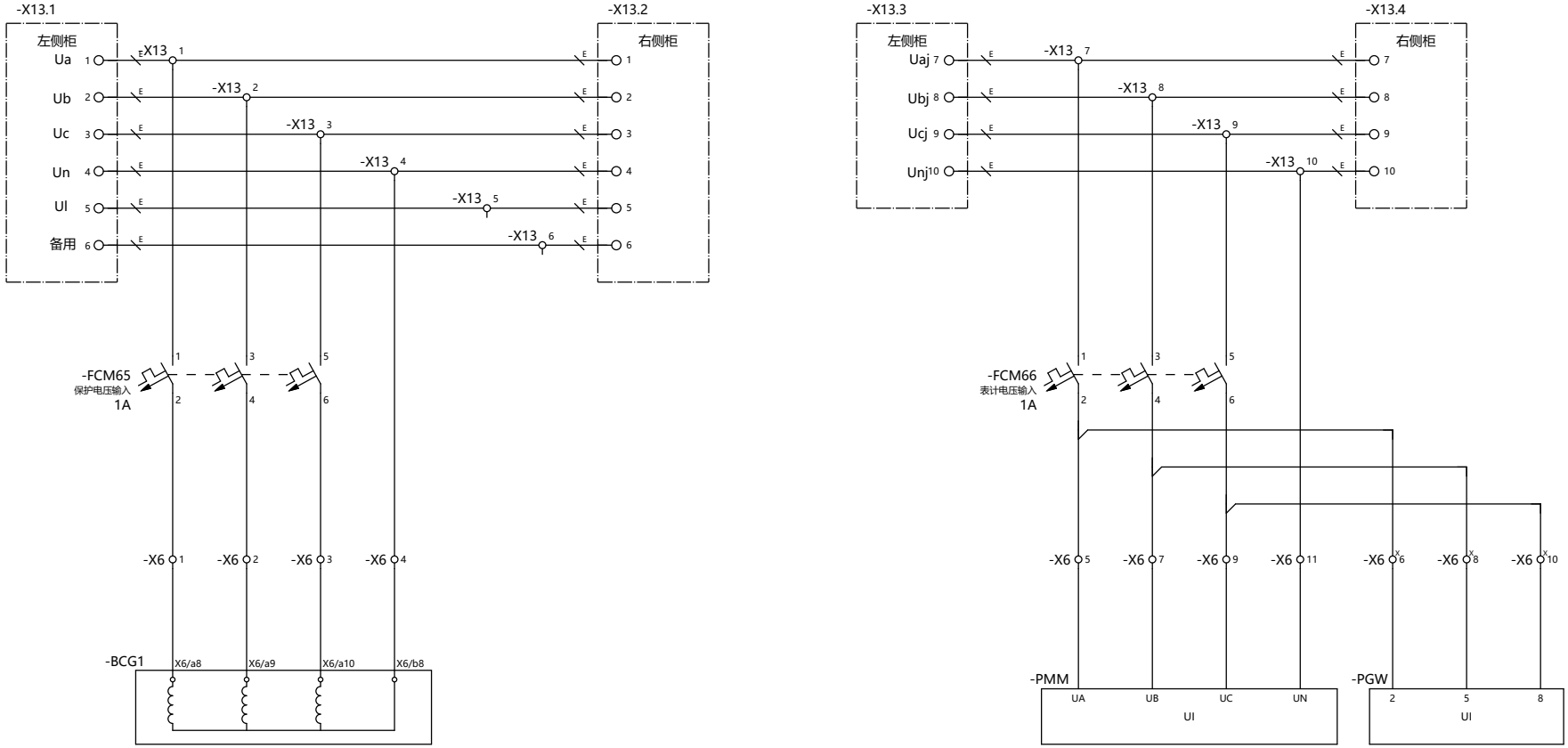

This drawing and information contained thereon is the property of ABB (XIAMEN) Switchgear CO. LTD. and shall not be used, reproduced for any purpose, or shown to third parties without the written consent of ABB (XIAMEN) Switchgear CO. LTD.

REV.	DESCRIPTION	REV. DATE

DRAWN	XINYU LIU	TITLE	电压小母线
CHECKED	Jianjun-Wang		
APPROVED	Yongsheng.Li	CONTRACT NO.:	504485024
FIRST DATE	2025/4/28		

FUNCTION: 电机柜

PROJECT: 天津渤化永利丁辛醇项目

= FM1 | SHEET NO 12 | SCALE 1:1 | TOTAL PAGES 14

DRAWING NO XZS1-48353-A01-FM1-S

测量电流输入	保护电流输入	零序电流输入	磁平衡电流输入 (备用)

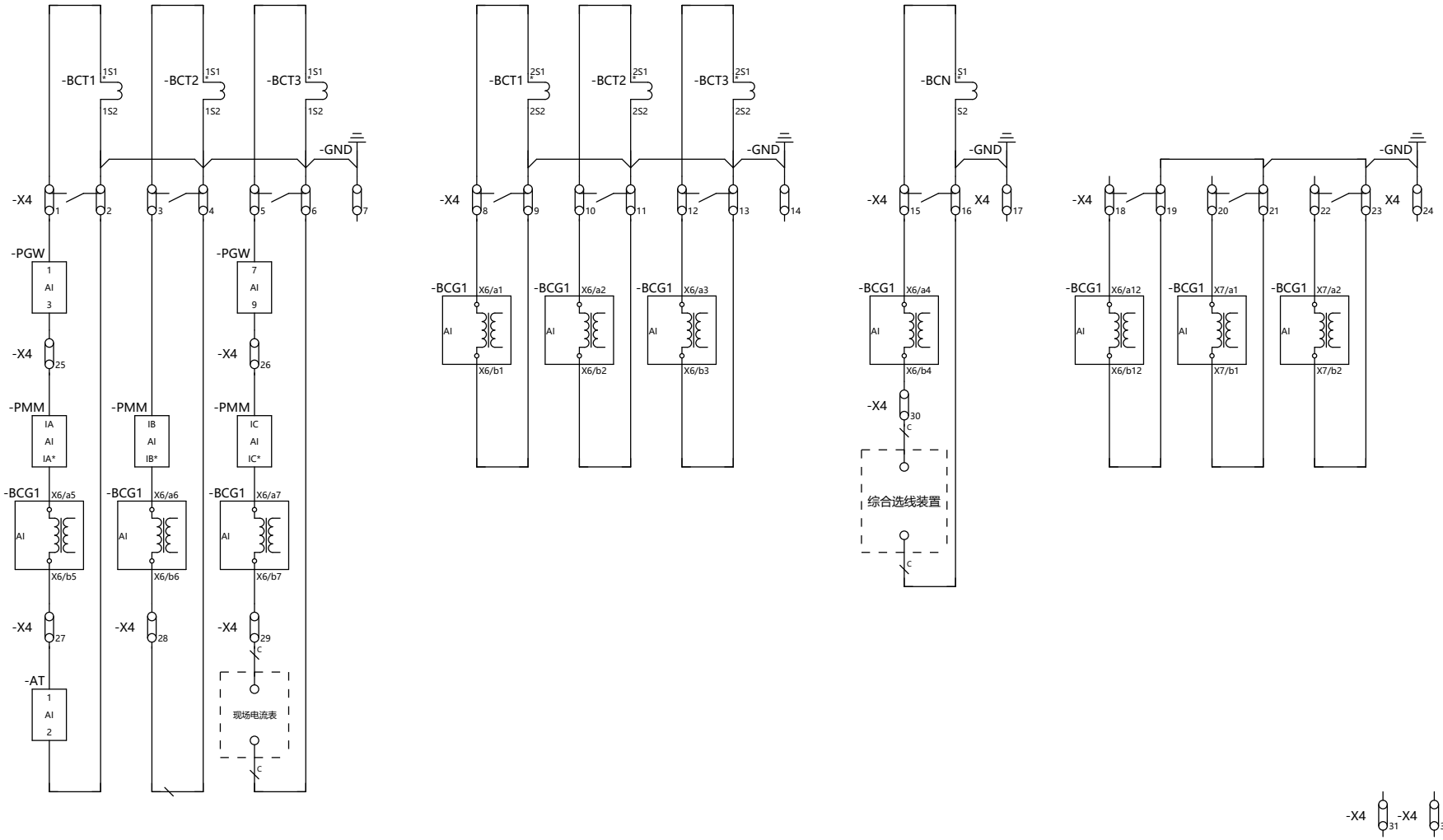

This drawing and information contained thereon is the property of ABB (XIAMEN) Switchgear CO. LTD. and shall not be used, reproduced for any purpose ,or shown to third parties without the written consent of ABB (XIAMEN) Switchgear CO. LTD.

REV.	DESCRIPTION	REV. DATE

DRAWN	XINYU LIU	TITLE	电流回路
CHECKED	Jianjun-Wang		
APPROVED	Yongsheng.Li	CONTRACT NO.:	504485024
FIRST DATE	2025/4/28		

FUNCTION: 电机柜

PROJECT: 天津渤化永利丁辛醇项目

= FM1	SHEET NO 13
SCALE 1:1	TOTAL PAGES 14
DRAWING NO XZS1-48353-A01-FM1-S	

VD4

-QAB

VD4/P-77

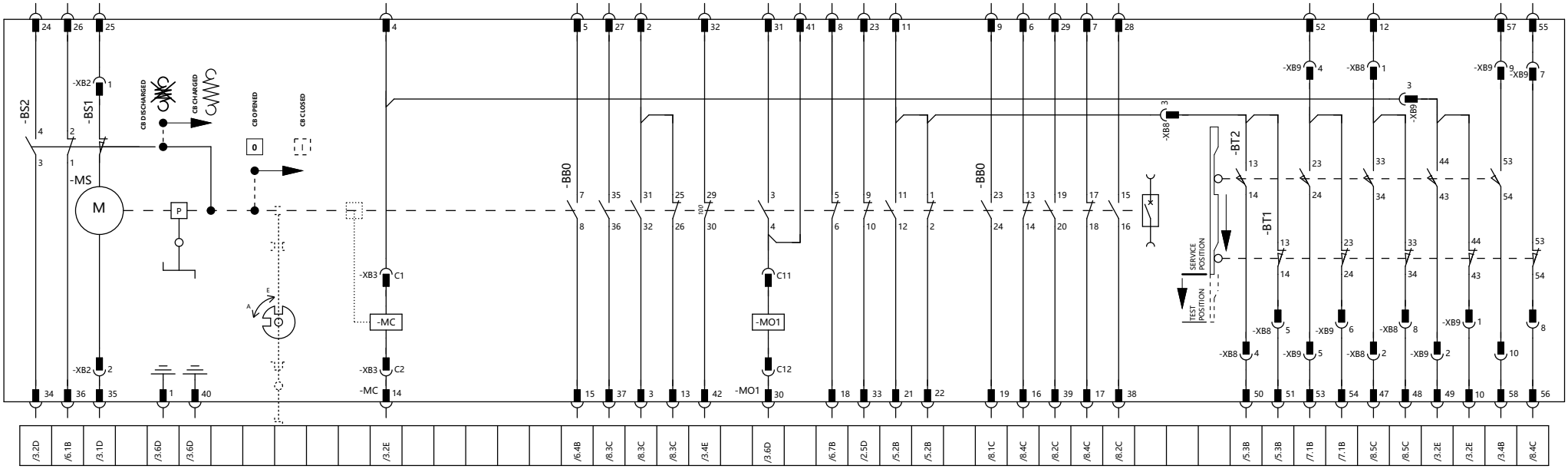

名称	描述	备注
-BS1	储能电机限位开关	
-MS	弹簧操作机构储能电机	
-MC	合闸脱扣器	
-MO1	第一分闸脱扣器	

名称	描述	备注
-BS2	合闸弹簧储能/未储能信号触点	
-BB0	与断路器主轴联动的辅助开关	
-BT1	限位开关(手车位于运行位置)	
-BT2	限位开关(手车位于试验位置)	

接地开关与断路器手车具有可靠的机械闭锁： A)
只有当断路器手车位于试验位置时，才允许操作接地开关 B)
只有当接地开关处于分状态时,断路器手车才允许由试验位置推入运行位置。

电气控制接线图/接点位置参考：
此图所示状态为：断路器手车工作位置 断路器处于分闸状态 操作机构弹簧未储能

This drawing and information contained thereon is the property of ABB (XIAMEN) Switchgear CO. LTD. and shall not be used, reproduced for any purpose, or shown to third parties without the written consent of ABB (XIAMEN) Switchgear CO. LTD.

REV.	DESCRIPTION	REV. DATE

DRAWN	XINYU LIU	TITLE	断路器接线图
CHECKED	Jianjun-Wang		
APPROVED	Yongsheng.Li	CONTRACT NO.:	504485024
FIRST DATE	2025/4/28		

ABB

FUNCTION	电机柜
PROJECT	天津渤化永利丁辛醇项目

= FM1	SHEET NO 14
SCALE 1:1	TOTAL PAGES 14
DRAWING NO XZS1-48353-A01-FM1-S	

设备清单(柜体)

序号	设备号	设备名称	物料号	数量	制造商	型号	设备参数
1	-BAD	电容分压装置	DIK-06-B06N1000C-1	3	/	B06N-1000C-1	Un=6kV
2	-BCN	零序电流互感器	CTZ-GLMZ2150501-A1	1	ABB	LMZ215-80-120	50/1A,CORE:2VA/10P10,120mm
3	-BCT1	电流互感器	CTA-G1K311-0943	1	ABB	LZZBJ9-12/150b/2	31.5KA/1SEC,150/1A,C1:0.5/20VA;C2:5P20/15VA;
4	-BCT2	电流互感器	CTA-G1K311-0943	1	ABB	LZZBJ9-12/150b/2	31.5KA/1SEC,150/1A,C1:0.5/20VA;C2:5P20/15VA;
5	-BCT3	电流互感器	CTA-G1K311-0943	1	ABB	LZZBJ9-12/150b/2	31.5KA/1SEC,150/1A,C1:0.5/20VA;C2:5P20/15VA;
6	-EA2	LED电缆室照明灯	L-CL10-1C-W-AA-CA	1	PEAKS	CL10-1C-W-AA	AC198-242V
7	-EB2	加热器	EP-HEATER-100W	1	SANYANG	1FZEK833B	100W
8	-FA	避雷器	SAS-YH2.5WD-8/18.7	3	西安神电	YH2.5WD-8/18.7	额定电压:8KV,持续运行电压:6.3KV,雷电冲击残压:18.7KV(8/20us 5kA)
9	-QAB	真空断路器	VD4/P-77	1	ABB	VD4	NEW VD4 P(旋转式辅助开关) WITHOUT RL1 WITH 7NO+7NC WITHOUT MT
10	-QCE	接地开关	ET1-BGE2/3	1	ABB	ET1	ET1 WITH BGE2&BGE3
11	-REL1	闭锁电磁铁	EP-MAGNET	1	PEAKS	EM10-S	/

This drawing and information contained thereon is the property of ABB (XIAMEN) Switchgear CO. LTD. and shall not be used, reproduced for any purpose ,or shown to third parties without the written consent of ABB (XIAMEN) Switchgear CO. LTD.

REV.	DESCRIPTION	REV. DATE

DRAWN	XINYU LIU	TITLE	设备清单(柜体)
CHECKED	Jianjun-Wang		
APPROVED	Yongsheng.Li	CONTRACT NO.:	504485024
FIRST DATE	2025/4/28		

FUNCTION: 电机柜

PROJECT: 天津渤化永利丁辛醇项目

= FM1 | SHEET NO 1

SCALE 1:1 | TOTAL PAGES 3

DRAWING NO XZS1-48353-A01-FM1-E

设备清单(低压室面板)

序号	设备号	设备名称	物料号	数量	制造商	型号	设备参数
1	-BCG1	电动机保护	CS-BHYL-05	1	北京四方	CSD-237A-G	装置电源：DC220V;电流输入：1A;电压输入：AC100V;
2	-BCM1	就地显示器	RLY-MP58	1	ABB	MP58 （LHMI）	/
3	-PFV1	强制型带电显示器	VIO-DXN-Q-A10-1	1	LEELEN	DXN-Q	DXN-Q 强制型带电显示器UGZS1 3KV/6KV/10kV，辅助电源：AC/DC 220/110V
4	-PFX1	手车位置指示	PIL-ADWZ25-B/2	1	LEELEN	ADWZ25-B/2	98-242V AC/DC,TRUCK POSITION
5	-PFX2	断路器状态指示	PIL-ADWZ25-K/2	1	LEELEN	ADWZ25-K/2	98-242V AC/DC,CB. STATUS
6	-PFX3	接地开关状态指示	PIL-ADWZ25-E/1	1	LEELEN	ADWZ25-E/1	98-242V AC/DC,EARTHING SWITCH STATUS
7	-PMM	多功能表	CS-BHYL-09	1	川泽电气	RISL-E96-5A-N-N-N-N	装置电源：DC220V ;电流输入：1A;电压输入：AC100V
8	-PW1	白色指示灯	LSA-CL2-520C	1	ABB	CL2-520C	Un=220V DC,WHITE
9	-RL10	五防锁	CS-BHYL-08	1	珠海优特电力科技股份有限公司	DNBS-2J	/
10	-SAM	高灵敏避雷器放电计数器	SAK-DJSII-C-11	1	安徽通辰	DJS-II/C	Un=110~220DC/AC 4.5m;3m
11	-SB1	黑色按钮	PBA-CP1-10B-11	1	ABB	CP1-10B-11	1NO+1NC,不带标牌套
12	-SB2	黑色自锁按钮	PBA-CP2-10B-11	1	ABB	CP2-10B-11	1NO+1NC,不带标牌套
13	-SB3	黑色按钮	PBA-CP1-10B-11	1	ABB	CP1-10B-11	1NO+1NC,不带标牌套
14	-SFS31	选择开关	SSJ-E01-2-401	1	JIANGYIN CHANGJIANG	LW38D-164B0339/2PY-DAN-AX	
15	-SFS32	选择开关	SSJ-E02-4-402	1	JIANGYIN CHANGJIANG	LW38D-164N1257/4P-AX	
16	-XLP1	插拔式压板	T-JY3-2	1	UPUN	JY3-2	驼色
17	-XLP2	插拔式压板	T-JY3-2	1	UPUN	JY3-2	驼色
18	-XLP3	插拔式压板	T-JY3-2	1	UPUN	JY3-2	驼色
19	-XLP4	插拔式压板	T-JY3-2	1	UPUN	JY3-2	驼色
20	-XLP5	插拔式压板	T-JY3-2	1	UPUN	JY3-2	驼色
21	-XLP6	插拔式压板	T-JY3-2	1	UPUN	JY3-2	驼色
22	-XLP7	插拔式压板	T-JY3-2	1	UPUN	JY3-2	驼色
23	-XLP8	插拔式压板	T-JY3-2	1	UPUN	JY3-2	驼色

This drawing and information contained thereon is the property of ABB (XIAMEN) Switchgear CO. LTD. and shall not be used, reproduced for any purpose ,or shown to third parties without the written consent of ABB (XIAMEN) Switchgear CO. LTD.

REV.	DESCRIPTION	REV. DATE

DRAWN	XINYU LIU	TITLE	设备清单(低压室面板)
CHECKED	Jianjun-Wang		
APPROVED	Yongsheng.Li	CONTRACT NO.:	504485024
FIRST DATE	2025/4/28		

FUNCTION: 电机柜

PROJECT: 天津渤化永利丁辛醇项目

= FM1 | SHEET NO 2 | SCALE 1:1 | TOTAL PAGES 3

DRAWING NO XZS1-48353-A01-FM1-E

设备清单(低压室)

序号	设备号	设备名称	物料号	数量	制造商	型号	设备参数
1	-AT	电流变送器	TDA-50AT1-158O	1	Ribar Electric	50-AT-1	Uaux=220V DC,INPUT:0-1A,OUTPUT:4-20mA
2	-BGD1	微动开关	EP-LVMS	1	PEAKS	TS11-001-01	MECHANICAL LIFE TIME>1000000TIMES
3	-BR20	TEMPERATURE MONITOR	RLY-MT585	1	ABB	MT585	100-240VDC/AC
4	-BR25	Humidity & Temperature Sensor	1YHT010000P0009	1	/	/	/
5	-EA1	LED低压室照明灯	L-CL10-1C-W-AA	1	PEAKS	CL10-1C-W-AA	SUPPLY: AC198~242V; POWER: <4W
6	-FCM10	微型空气开关	MCBA-202M-C1DC;MBDA-S2C-H11R	1;1	ABB	S202M-C1DC;S2C-H11R	Un=440V DC,In=1A,2-POLE
7	-FCM20	微型空气开关	MCBA-202M-C3DC;MBDA-S2C-H11R	1;1	ABB	S202M-C3DC;S2C-H11R	Un=440V DC,In=3A,2-POLE
8	-FCM30	微型空气开关	MCBA-202M-C3DC;MBDA-S2C-H11R	1;1	ABB	S202M-C3DC;S2C-H11R	Un=440V DC,In=3A,2-POLE
9	-FCM65	微型空气开关	MCBA-2030001R0014;MBDA-S2C-H11R	1;1	ABB	S203-C1;S2C-H11R	Un=400V AC,In=1A,3-POLE
10	-FCM66	微型空气开关	MCBA-2030001R0014;MBDA-S2C-H11R	1;1	ABB	S203-C1;S2C-H11R	Un=400V AC,In=1A,3-POLE
11	-FCM90	微型空气开关	MCBA-2010001R0034;MBDA-S2C-H11R	1;1	ABB	S201-C3;S2C-H11R	Un=230V AC,In=3A,1-POLE
12	-FCM92	微型空气开关	MCBA-2020001R0064;MBDA-S2C-H11R	1;1	ABB	S202-C6;S2C-H11R	Un=400V AC/125V DC,In=6A,2-POLE
13	-KFC1	中间继电器	RLY-CRMX220DC4	1	ABB	CRMX220DC4	CR-MX220DC4,UN=220V DC
14	-KFD1	轨道继电器	CS-504485024-01	1	北京四方	CSN-11	/
15	-KM1		RLY-B6-40-00-02	1	/	B6-40-00	Uaux=220-240V AC,4NO CONTACT
16	-PGW	电能表	CS-BHYL-07	1	Wisdom	DSZ178	装置电源：DC220V;电流输入：1A;电压输入：AC100V
17	-PMS	电度表挂表架	PMM-AUX-01	1	/	270	

This drawing and information contained thereon is the property of ABB (XIAMEN) Switchgear CO. LTD. and shall not be used, reproduced for any purpose ,or shown to third parties without the written consent of ABB (XIAMEN) Switchgear CO. LTD.

REV.	DESCRIPTION	REV. DATE

DRAWN	XINYU LIU	TITLE	设备清单(低压室)
CHECKED	Jianjun-Wang		
APPROVED	Yongsheng.Li	CONTRACT NO.:	504485024
FIRST DATE	2025/4/28		

FUNCTION: 电机柜

PROJECT: 天津渤化永利丁辛醇项目

= FM1 | SHEET NO 3 | SCALE 1:1 | TOTAL PAGES 3

DRAWING NO XZS1-48353-A01-FM1-E

REV.	DESCRIPTION	REV. DATE

This drawing and information contained thereon is the property of ABB (XIAMEN) Switchgear CO. LTD. and shall not be used, reproduced for any purpose ,or shown to third parties without the written consent of ABB (XIAMEN) Switchgear CO. LTD.

==A01=FM1+-X1

备注	外引电缆	设备	线号	端子号	型号	线号	设备	外引电缆	备注
		-FCM10:4		1	NEK4		-QAB:25		
				2	NEK4		-QAB:24		
		-FCM10:2		3	NEK4		-QAB:35		
				4	NEK4		-PW1:x2		
				5	NEK4		-KFC1:A2		
		-QAB:34		6	NEK4		-PW1:x1		
				7	NEK4		-KFC1:A1		

☆ 柜间小母线,随柜提供

△ 柜间控制电路(由客户自备)

短接排

分隔板

(测试短接片

O 其他

DRAWN	XINYU LIU	TITLE
CHECKED	Jianjun-Wang	端子图表 ==A01=FM1+-X1
APPROVED	Yongsheng.Li	CONTRACT NO.:
FIRST DATE	2025/4/28	504485024

FUNCTION: 电机柜

PROJECT: 天津渤化永利丁辛醇项目

=	FM1	SHEET NO. 1
SCALE	1:1	TOTAL PAGES 13
DRAWING NO.	XZS1-48353-A01-FM1-T	

REV.	DESCRIPTION	REV. DATE

This drawing and information contained thereon is the property of ABB (XIAMEN) Switchgear CO. LTD. and shall not be used, reproduced for any purpose ,or shown to third parties without the written consent of ABB (XIAMEN) Switchgear CO. LTD.

==A01=FM1+-X2

备注	外引电缆	设备	线号	端子号	型号	线号	设备	外引电缆	备注
		-FCM20:4		● 1	NEK4		-QAB:11		
				● 2	NEK4		-QCE:BGE2/42		
				● 3	NEK4		-BR20:1		
				● 4	NEK4		-PMM:L+		
				● 5	NEK4		-PGW:12		
				● 6	NEK4		-SAM:P2/01		
				● 7	NEK4		-AT:3		
				● 8	NEK4		-BCG1:X1/c24		
				● 9	NEK4		-QAB:26		
	△	-仪表联跳		● 10	NEK4		-KFD1:9		
				● 11	NEK4				
				● 12	NEK4		-SB3:13		
				● 13	NEK4				
				● 14	NEK4		-QAB:5		
				● 15	NEK4		-SFS32:11		
				● 16	NEK4		-SB1:13		
				● 17	NEK4		-XLP6:1		
				● 18	NEK4		-QAB:8		
				● 19	NEK4				
				● 20	NEK4		-FCM90:11		
				● 21	NEK4		-QAB:52		
				● 22	NEK4		-QCE:BGE2/40		
	△	-邻柜继保装置故障		● 23	NEK4				
				● 24	NEK4				
				● 25	NEK4				
				● 26	NEK4				
				● 27	NEK4				
				● 28	NEK4				
	△	-外部指示灯-公共端		● 29	NEK4		-FCM20:2		
				● 30	NEK4		-PFX2:1		
				● 31	NEK4		-BR20:2		
				● 32	NEK4		-PMM:N-		
				● 33	NEK4		-PGW:13		
				● 34	NEK4		-SAM:P2/03		
				● 35	NEK4		-AT:4		
				● 36	NEK4		-BCG1:X1/c28		
		-KFD1:6		● 37	NEK4		-BCG1:X1/c12		
				● 38	NEK4		-BCG1:X3/c32		
				● 39	NEK4				
				● 40	NEK4		-QAB:21		
	△	-外部指示灯-合闸指示		● 41	NEK4		-PFX2:3		
				● 42	NEK4		-QAB:22		
	△	-外部指示灯-分闸指示		● 43	NEK4		-PFX2:2		
		-QAB:51		44	NEK4		-PFX1:3		
		-QAB:50		45	NEK4		-PFX1:2		
		-QCE:BGE2/43		46	NEK4		-PFX3:3		
		-QCE:BGE3/23		47	NEK4		-PFX3:2		
		-QAB:36		48	NEK4		-BCG1:X1/a2		
	△	-仪表联跳		49	NEK4		-XLP5:1		
		-XLP5:2		50	NEK4		-KFD1:1		
		-KFD1:8		51	NEK4		-BCG1:X1/a4		
				52	NEK4		-BCG1:X1/a6		
				53	NEK4		-BCG1:X1/a8		
				54	NEK4				

☆ 柜间小母线,随柜提供

△ 柜间控制电路(由客户自备)

短接排

✕ 分隔板

(测试短接片

O 其他

DRAWN	XINYU LIU	TITLE
CHECKED	Jianjun-Wang	端子图表 ==A01=FM1+-X2
APPROVED	Yongsheng.Li	CONTRACT NO.:
FIRST DATE	2025/4/28	504485024
REV. DATE		
DESCRIPTION		
REV.		

FUNCTION: 电机柜

PROJECT: 天津渤化永利丁辛醇项目

=	FM1	SHEET NO.	2
SCALE	1:1	TOTAL PAGES	13
DRAWING NO.	XZS1-48353-A01-FM1-T		

REV.	DESCRIPTION	REV. DATE

This drawing and information contained thereon is the property of ABB (XIAMEN) Switchgear CO. LTD. and shall not be used, reproduced for any purpose ,or shown to third parties without the written consent of ABB (XIAMEN) Switchgear CO. LTD.

==A01=FM1+-X2

备注	外引电缆	设备	线号	端子号	型号	线号	设备	外引电缆	备注
				55	NEK4		-BCG1:X1/a12		
		-QAB:15		56	NEK4		-BCG1:X1/c2		
		-QAB:18		57	NEK4		-BCG1:X3/a20		
				58	NEK4		-BCG1:X3/a22		
		-FCM10:11		59	RCT4SW		-FCM90:11		
		-FCM92:12		60	NEK4		-BCG1:X3/a24		
		-QAB:54		61	NEK4		-BCG1:X3/a26		
		-QAB:53		62	NEK4		-BCG1:X3/a28		
		-QCE:BGE2/41		63	NEK4		-BCG1:X3/a30		
		-QCE:BGE3/21		64	NEK4		-BCG1:X3/a32		
	△	-邻柜继保装置故障		65	NEK4		-BCG1:X3/c20		
				66	NEK4		-BCG1:X3/c22		
				67	NEK4		-BCG1:X3/c24		
				68	NEK4		-BCG1:X3/c26		
				69	NEK4		-BCG1:X3/c28		
				70	NEK4		-BCG1:X3/c30		

☆ 柜间小母线,随柜提供

△ 柜间控制电路(由客户自备)

短接排

分隔板

(测试短接片

O 其他

DRAWN	XINYU LIU	TITLE
CHECKED	Jianjun-Wang	端子图表 ==A01=FM1+-X2
APPROVED	Yongsheng.Li	CONTRACT NO.:
FIRST DATE	2025/4/28	504485024
REV. DATE		
DESCRIPTION		
REV.		

FUNCTION 电机柜

PROJECT 天津渤化永利丁辛醇项目

=	FM1	SHEET NO. 2.a
SCALE	1:1	TOTAL PAGES 13
DRAWING NO. XZS1-48353-A01-FM1-T		

REV.	DESCRIPTION	REV. DATE

This drawing and information contained thereon is the property of ABB (XIAMEN) Switchgear CO. LTD. and shall not be used, reproduced for any purpose ,or shown to third parties without the written consent of ABB (XIAMEN) Switchgear CO. LTD.

==A01=FM1+-X3

备注	外引电缆	设备	线号	端子号	型号	线号	设备	外引电缆	备注
				1	NEK4		-FCM30:4		
				2	NEK4				
				3	NEK4		-SFS32:15		
				4	NEK4		-RL10:+		
				5	NEK4		-SFS32:3		
	△	-现场操作柱分闸		6	NEK4				
	△	-紧急分闸		7	NEK4				
				8	NEK4		-BCG1:X2/c2		
				9	NEK4		-BCG1:X3/c4		
				10	NEK4		-BCG1:X3/c6		
				11	NEK4		-BCG1:X3/c8		
				12	NEK4				
				13	NEK4				
				14	NEK4		-BCG1:X2/c10		
				15	NEK4		-PFV1:220V		
				16	NEK4				
		-FCM30:2		17	NEK4		-QAB:14		
				18	NEK4		-QAB:30		
				19	NEK4		-BCG1:X2/c22		
				20	NEK4		-PFV1:0V		
				21	NEK4		-REL1:E2		
				22	NEK4				
				23	NEK4		-QAB:49		
	△	-允许开车		24	NEK4				
				25	NEK4		-X3:33		
	△	-允许开车		26	NEK4		-BCG1:X3/c2		
		-BCG1:X3/a2		27	NEK4		-QAB:10		
		-QAB:32		28	NEK4		-QAB:4		
				29	NEK4				
				30	NEK4		-X3:57		
		-X3:53		31	NEK4		-QAB:58		
				32	NEK4				
		-X3:25		33	NEK4		-BCG1:X2/a18		
		-QAB:42		34	NEK4		-BCG1:X2/a16		
				35	NEK4		-BCG1:X2/a20		
				36	NEK4				
		-SFS31:2		37	NEK4		-BCG1:X2/c16		
				38	NEK4				
	△	-现场操作柱分闸		39	NEK4		-BCG1:X2/c14		
	△	-紧急分闸		40	NEK4				
				41	NEK4				
				42	NEK4		-BCG1:X2/c20		
		-BCG1:X2/c12		43	NEK4		-XLP1:2		
				44	NEK4		-XLP2:2		
				45	NEK4		-XLP3:2		
				46	NEK4		-XLP4:2		
				47	NEK4				
				48	NEK4				
		-QAB:31		49	NEK4		-BCG1:X2/a14		
				50	NEK4		-BCG1:X2/a12		
				51	NEK4		-QAB:41		
		-PFV1:COM		52	NEK4		-REL1:E1		
		-BCG1:X2/c18		53	NEK4		-X3:31		
				54	NEK4				

☆ 柜间小母线,随柜提供

△ 柜间控制电路(由客户自备)

短接排

✕ 分隔板

(测试短接片

O 其他

DRAWN	XINYU LIU	TITLE
CHECKED	Jianjun-Wang	端子图表 ==A01=FM1+-X3
APPROVED	Yongsheng.Li	CONTRACT NO.:
FIRST DATE	2025/4/28	504485024
REV. DATE		
REV.		
DESCRIPTION		

FUNCTION: 电机柜

PROJECT: 天津渤化永利丁辛醇项目

=	FM1	SHEET NO.	3
SCALE	1:1	TOTAL PAGES	13
DRAWING NO.	XZS1-48353-A01-FM1-T		

REV.	DESCRIPTION	REV. DATE

This drawing and information contained thereon is the property of ABB (XIAMEN) Switchgear CO. LTD. and shall not be used, reproduced for any purpose ,or shown to third parties without the written consent of ABB (XIAMEN) Switchgear CO. LTD.

==A01=FM1+-X3

备注	外引电缆	设备	线号	端子号	型号	线号	设备	外引电缆	备注
	△	-现场操作柱合闸		●55	NEK4				
				●56	NEK4				
				●57	NEK4		-X3:30		
	△	-现场操作柱合闸		58	NEK4		-SFS32:16		
		-SFS31:4		59	NEK4		-QAB:57		
				60	NEK4		-SFS32:4		

☆ 柜间小母线,随柜提供

△ 柜间控制电路(由客户自备)

短接排

✕ 分隔板

(测试短接片

O 其他

REV.		
DESCRIPTION		
REV. DATE		
DRAWN	XINYU LIU	TITLE 端子图表 ==A01=FM1+-X3
CHECKED	Jianjun-Wang	
APPROVED	Yongsheng.Li	CONTRACT NO.: 504485024
FIRST DATE	2025/4/28	

FUNCTION 电机柜

PROJECT 天津渤化永利丁辛醇项目

=	FM1	SHEET NO.	3.a
SCALE	1:1	TOTAL PAGES	13
DRAWING NO.	XZS1-48353-A01-FM1-T		

REV.	DESCRIPTION	REV. DATE

This drawing and information contained thereon is the property of ABB (XIAMEN) Switchgear CO. LTD. and shall not be used, reproduced for any purpose ,or shown to third parties without the written consent of ABB (XIAMEN) Switchgear CO. LTD.

==A01=FM1+-X4

备注	外引电缆	设备	线号	端子号	型号	线号	设备	外引电缆	备注
		-BCT1:1S1		1	NEK6S		-PGW:1		
		-BCT1:1S2		2	NEK6S		-AT:2		
		-BCT2:1S1		3	NEK6S		-PMM:IB		
		-BCT2:1S2		4	NEK6S		-X4:28		
		-BCT3:1S1		5	NEK6S		-PGW:7		
		-BCT3:1S2		6	NEK6S		-现场电流表	△	
		-GND		7	NEK6S				
		-BCT1:2S1		8	NEK6S		-BCG1:X6/a1		
		-BCT1:2S2		9	NEK6S		-BCG1:X6/b1		
		-BCT2:2S1		10	NEK6S		-BCG1:X6/a2		
		-BCT2:2S2		11	NEK6S		-BCG1:X6/b2		
		-BCT3:2S1		12	NEK6S		-BCG1:X6/a3		
		-BCT3:2S2		13	NEK6S		-BCG1:X6/b3		
		-GND		14	NEK6S				
		-BCN:S1		15	NEK6S		-BCG1:X6/a4		
		-BCN:S2		16	NEK6S		-综合选线装置	△	
		-GND		17	NEK6S				
				18	NEK6S		-BCG1:X6/a12		
				19	NEK6S		-BCG1:X6/b12		
				20	NEK6S		-BCG1:X7/a1		
				21	NEK6S		-BCG1:X7/b1		
				22	NEK6S		-BCG1:X7/a2		
				23	NEK6S		-BCG1:X7/b2		
		-GND		24	NEK6S				
		-PGW:3		25	NEK6S		-PMM:IA		
		-PGW:9		26	NEK6S		-PMM:IC		
		-BCG1:X6/b5		27	NEK6S		-AT:1		
		-BCG1:X6/b6		28	NEK6S		-X4:4		
		-BCG1:X6/b7		29	NEK6S		-现场电流表	△	
		-BCG1:X6/b4		30	NEK6S		-综合选线装置	△	
				31	NEK6S				
				32	NEK6S				
				33	NEK6S				

☆ 柜间小母线,随柜提供

△ 柜间控制电路(由客户自备)

短接排

✕ 分隔板

(测试短接片

O 其他

DRAWN	XINYU LIU
CHECKED	Jianjun-Wang
APPROVED	Yongsheng.Li
FIRST DATE	2025/4/28
REV. DATE	
REV.	
DESCRIPTION	

TITLE: 端子图表 ==A01=FM1+-X4

CONTRACT NO.: 504485024

FUNCTION: 电机柜

PROJECT: 天津渤化永利丁辛醇项目

=	FM1
SCALE	1:1
SHEET NO.	4
TOTAL PAGES	13
DRAWING NO.	XZS1-48353-A01-FM1-T

REV.	DESCRIPTION	REV. DATE

This drawing and information contained thereon is the property of ABB (XIAMEN) Switchgear CO. LTD. and shall not be used, reproduced for any purpose ,or shown to third parties without the written consent of ABB (XIAMEN) Switchgear CO. LTD.

==A01=FM1+-X5

备注	外引电缆	设备	线号	端子号	型号	线号	设备	外引电缆	备注
				1	NEK4		-KFC1:14		
				2	NEK4		-KFC1:11		
	△	-至DCS运行信号		3	NEK4		-QAB:9		
	△	-至DCS运行信号		4	NEK4		-QAB:19		
				5	NEK4		-QAB:28		
				6	NEK4		-QAB:38		
				7	NEK4		-QAB:29		
				8	NEK4		-QAB:39		
				9	NEK4		-QAB:27		
				10	NEK4		-QAB:37		
				11	NEK4		-QAB:2		
				12	NEK4		-QAB:3		
				13	NEK4		-QAB:13		
				14	NEK4		-QAB:6		
				15	NEK4		-QAB:16		
				16	NEK4		-QAB:7		
				17	NEK4		-QAB:17		
				18	NEK4		-QAB:55		
				19	NEK4		-QAB:56		
				20	NEK4		-QAB:48		
				21	NEK4		-QAB:12		
				22	NEK4		-QAB:47		
				23	NEK4		-QCE:BGE2/44		
				24	NEK4		-QCE:BGE2/45		
				25	NEK4		-QCE:BGE2/46		
				26	NEK4		-QCE:BGE2/47		
				27	NEK4		-QCE:BGE3/24		
				28	NEK4		-QCE:BGE3/25		
				29	NEK4		-QCE:BGE3/26		
				30	NEK4		-QCE:BGE3/27		
				31	NEK4		-SFS32:5		
				32	NEK4		-SFS32:6		
				33	NEK4		-SFS32:7		
				34	NEK4		-SFS32:8		
				35	NEK4		-FCM20:11		
				36	NEK4		-FCM20:12		
				37	NEK4		-SAM:P1/03		
				38	NEK4		-SAM:P1/04		
				39	NEK4		-BCG1:X2/c28		
				40	NEK4		-BCG1:X2/c32		
				41	NEK4		-BCG1:X2/c30		
				42	NEK4		-BCG1:X1/a22		
				43	NEK4		-BCG1:X1/a20		
				44	NEK4		-BCG1:X1/a18		
	△	-至邻柜继保BI		45	NEK4		-BCG1:X1/a14		
	△	-至邻柜继保BI		46	NEK4		-BCG1:X1/a16		
				47	NEK4		-XLP8:1		
				48	NEK4		-BCG1:X2/a6		
				49	NEK4		-BCG1:X2/a4		
				50	NEK4		-BR20:4		
				51	NEK4		-BR25:V+		
				52	NEK4		-BR20:5		
				53	NEK4		-BR25:V-		
				54	NEK4				

☆ 柜间小母线,随柜提供

△ 柜间控制电路(由客户自备)

短接排

✕ 分隔板

(测试短接片

O 其他

DRAWN	XINYU LIU
CHECKED	Jianjun-Wang
APPROVED	Yongsheng.Li
FIRST DATE	2025/4/28
REV. DATE	
REV.	
DESCRIPTION	

TITLE: 端子图表 ==A01=FM1+-X5

CONTRACT NO.: 504485024

FUNCTION: 电机柜

PROJECT: 天津渤化永利丁辛醇项目

=	FM1
SCALE	1:1
SHEET NO.	5
TOTAL PAGES	13

DRAWING NO. XZS1-48353-A01-FM1-T

==A01=FM1+-X5

备注	外引电缆	设备	线号	型号	端子号	线号	设备	备注	外引电缆	设备	线号
				NEK4	ı 55						
				NEK4	ı 56						
				NEK4	ı 57						
				NEK4	ı 58						
				NEK4	ı 59						
				NEK4	ı 60						
				NEK4	ı 61						
				NEK4	ı 62						
				NEK4	ı 63						

☆ 柜间小母线,厢柜提供

△ 柜间控制电路(由客户自备)

短接排

分隔板

测试短接片

其他

This drawing and information contained thereon is the property of ABB (XIAMEN) Switchgear CO. LTD. and shall not be used, reproduced for any purpose ,or shown to third parties without the written consent of ABB (XIAMEN) Switchgear CO.LTD.

REV.	DESCRIPTION	REV. DATE

DRAWN	XINYU LIU	TITLE	端子图表 ==A01=FM1+-X5
CHECKED	Jianjun-Wang		
APPROVED	Yongsheng.Li	CONTRACT NO.:	504485024
FIRST DATE	2025/4/28		

FUNCTION: 电机柜

PROJECT: 天津渤化永利丁辛醇项目

= FM1 | SHEET NO 5.a

SCALE 1:1 | TOTAL PAGES 13

DRAWING NO XZS1-48353-A01-FM1-T

REV.	DESCRIPTION	REV. DATE

This drawing and information contained thereon is the property of ABB (XIAMEN) Switchgear CO. LTD. and shall not be used, reproduced for any purpose ,or shown to third parties without the written consent of ABB (XIAMEN) Switchgear CO. LTD.

==A01=FM1+-X6

备注	外引电缆	设备	线号	端子号	型号	线号	设备	外引电缆	备注
		-FCM65:2		1	NEK4		-BCG1:X6/a8		
		-FCM65:4		2	NEK4		-BCG1:X6/a9		
		-FCM65:6		3	NEK4		-BCG1:X6/a10		
		-X13:4		4	NEK4		-BCG1:X6/b8		
		-FCM66:2		5	NEK4		-PMM:UA		
				6	NEK4		-PGW:2		
		-FCM66:4		7	NEK4		-PMM:UB		
				8	NEK4		-PGW:5		
		-FCM66:6		9	NEK4		-PMM:UC		
				10	NEK4		-PGW:8		
		-X13:10		11	NEK4		-PMM:UN		

☆ 柜间小母线,随柜提供

△ 柜间控制电路(由客户自备)

短接排

✕ 分隔板

(测试短接片

O 其他

DRAWN	XINYU LIU
CHECKED	Jianjun-Wang
APPROVED	Yongsheng.Li
FIRST DATE	2025/4/28
REV. DATE	
REV.	
DESCRIPTION	

TITLE: 端子图表 ==A01=FM1+-X6

CONTRACT NO.: 504485024

FUNCTION: 电机柜

PROJECT: 天津渤化永利丁辛醇项目

=	FM1
SCALE	1:1
SHEET NO.	6
TOTAL PAGES	13
DRAWING NO.	XZS1-48353-A01-FM1-T

REV.	DESCRIPTION	REV. DATE

This drawing and information contained thereon is the property of ABB (XIAMEN) Switchgear CO. LTD. and shall not be used, reproduced for any purpose ,or shown to third parties without the written consent of ABB (XIAMEN) Switchgear CO. LTD.

==A01=FM1+-X9

备注	外引电缆	设备	线号	端子号	型号	线号	设备	外引电缆	备注
				1	NEK4		-EB2:1		
				2	NEK4		-SB2:13		
		-FCM90:2		3	NEK4		-BGD1:1		
		-FCM92:3		4	NEK4		-EB2:2		
				5	NEK4		-EA2:A2		
		-X11:4		6	NEK4		-EA1:A2		
		-SB2:14		7	NEK4		-EA2:A1		
		-EA1:A1		8	RCT4SW		-BGD1:2		
				9	NEK4		-X9:11		
		-FCM92:2		10	NEK4		-KM1:1		
		-X9:9		11	NEK4		-QAB:23		
		-QAB:33		12	NEK4		-KM1:A1		
	△	-电机加热器		13	NEK4		-KM1:2		
	△	-电机加热器		14	NEK4		-KM1:4		

☆ 柜间小母线,随柜提供

△ 柜间控制电路(由客户自备)

短接排

✕ 分隔板

(测试短接片

O 其他

REV.	DESCRIPTION	REV. DATE

DRAWN	XINYU LIU	TITLE
CHECKED	Jianjun-Wang	端子图表 ==A01=FM1+-X9
APPROVED	Yongsheng.Li	CONTRACT NO.:
FIRST DATE	2025/4/28	504485024

FUNCTION 电机柜

PROJECT 天津渤化永利丁辛醇项目

=	FM1	SHEET NO.	7
SCALE	1:1	TOTAL PAGES	13
DRAWING NO.	XZS1-48353-A01-FM1-T		

REV.	DESCRIPTION	REV. DATE

This drawing and information contained thereon is the property of ABB (XIAMEN) Switchgear CO. LTD. and shall not be used, reproduced for any purpose ,or shown to third parties without the written consent of ABB (XIAMEN) Switchgear CO. LTD.

==A01=FM1+-X11

备注	外引电缆	设备	线号	端子号	型号	线号	设备	外引电缆	备注
6黑色	☆	-X11.2:1		1	A3C 6		-FCM90:1		
6黑色	☆	-X11.1:1							
6黑色	☆	-X11.2:2		2	A3C 6				
6黑色	☆	-X11.1:2							
6黑色	☆	-X11.2:3		3	A3C 6				
6黑色	☆	-X11.1:3							
6黑色	☆	-X11.2:4		4	A3C 6		-X9:6		
6黑色	☆	-X11.1:4							
6黑色	☆	-X11.2:5		5	A3C 6		-FCM10:3		
6黑色	☆	-X11.1:5							
6黑色	☆	-X11.2:6		6	A3C 6		-FCM10:1		
6黑色	☆	-X11.1:6							
6黑色	☆	-X11.2:7		7	A3C 6		-FCM30:3		
6黑色	☆	-X11.1:7							
6黑色	☆	-X11.2:8		8	A3C 6		-FCM30:1		
6黑色	☆	-X11.1:8							

☆ 柜间小母线,随柜提供

△ 柜间控制电路(由客户自备)

短接排

分隔板

(测试短接片

O 其他

REV.	DESCRIPTION	REV. DATE

DRAWN	XINYU LIU	TITLE
CHECKED	Jianjun-Wang	端子图表 ==A01=FM1+-X11
APPROVED	Yongsheng.Li	CONTRACT NO.:
FIRST DATE	2025/4/28	504485024

FUNCTION 电机柜

PROJECT 天津渤化永利丁辛醇项目

=	FM1	SHEET NO.	8
SCALE	1:1	TOTAL PAGES	13
DRAWING NO.	XZS1-48353-A01-FM1-T		

REV.	DESCRIPTION	REV. DATE

This drawing and information contained thereon is the property of ABB (XIAMEN) Switchgear CO. LTD. and shall not be used, reproduced for any purpose ,or shown to third parties without the written consent of ABB (XIAMEN) Switchgear CO. LTD.

==A01=FM1+-X13

备注	外引电缆	设备	线号	端子号	型号	线号	设备	外引电缆	备注
	☆	-X13.1:1		1	A4C 4		-FCM65:1		
	☆	-X13.2:1							
	☆	-X13.1:2		2	A4C 4		-FCM65:3		
	☆	-X13.2:2							
	☆	-X13.1:3		3	A4C 4		-FCM65:5		
	☆	-X13.2:3							
	☆	-X13.1:4		4	A4C 4		-X6:4		
	☆	-X13.2:4							
	☆	-X13.1:5		5	A4C 4				
	☆	-X13.2:5							
	☆	-X13.1:6		6	A4C 4				
	☆	-X13.2:6							
	☆	-X13.3:7		7	A4C 4		-FCM66:1		
	☆	-X13.4:7							
	☆	-X13.3:8		8	A4C 4		-FCM66:3		
	☆	-X13.4:8							
	☆	-X13.3:9		9	A4C 4		-FCM66:5		
	☆	-X13.4:9							
	☆	-X13.3:10		10	A4C 4		-X6:11		
	☆	-X13.4:10							

☆ 柜间小母线,随柜提供

△ 柜间控制电路(由客户自备)

短接排

✕ 分隔板

(测试短接片

O 其他

DRAWN	XINYU LIU
CHECKED	Jianjun-Wang
APPROVED	Yongsheng.Li
FIRST DATE	2025/4/28
REV. DATE	
REV.	
DESCRIPTION	

TITLE: 端子图表 ==A01=FM1+-X13

CONTRACT NO.: 504485024

FUNCTION: 电机柜

PROJECT: 天津渤化永利丁辛醇项目

=	FM1
SCALE	1:1
SHEET NO.	9
TOTAL PAGES	13

DRAWING NO. XZS1-48353-A01-FM1-T

REV.	DESCRIPTION	REV. DATE

This drawing and information contained thereon is the property of ABB (XIAMEN) Switchgear CO. LTD. and shall not be used, reproduced for any purpose ,or shown to third parties without the written consent of ABB (XIAMEN) Switchgear CO. LTD.

==A01=FM1+-X14

备注	外引电缆	设备	线号	端子号	型号	线号	设备	外引电缆	备注
	☆	-X14:2		1	NEK4		-BR20:10		
	☆	-X14:1		2	NEK4				
	☆	-X14:4		3	NEK4		-BR20:9		
	☆	-X14:3		4	NEK4				
	☆	-X14:6		5	NEK4		-ST1		
	☆	-X14:5		6	NEK4				
	☆	-X14:8		7	NEK4		-PGW:25		
	☆	-X14:7		8	NEK4				
	☆	-X14:10		9	NEK4		-PGW:26		
	☆	-X14:9		10	NEK4				
	☆	-X14:12		11	NEK4		-ST1		
	☆	-X14:11		12	NEK4				
				13	NEK4		-BCG1:X4/1		
				14	NEK4		-BCG1:X4/2		
				15	NEK4		-BCG1:X4/3		
				16	NEK4		-SAM:P1/01		
				17	NEK4		-SAM:P1/02		
				18	NEK4		-PMM:A		
				19	NEK4		-PMM:B		
				20	NEK4		-PMM:S		
				21	NEK4		-BR20:7		
				22	NEK4		-BR25:A		
				23	NEK4		-BR20:6		屏蔽双绞线
				24	NEK4		-BR25:B		
	△	-至DCS4~20mA电流引出		25	NEK4		-AT:5		
	△	-至DCS4~20mA电流引出		26	NEK4		-AT:6		

☆ 柜间小母线,随柜提供

△ 柜间控制电路(由客户自备)

短接排

✕ 分隔板

(测试短接片

O 其他

REV.	DESCRIPTION	REV. DATE		
			DRAWN	XINYU LIU
			CHECKED	Jianjun-Wang
			APPROVED	Yongsheng.Li
			FIRST DATE	2025/4/28

TITLE 端子图表 ==A01=FM1+-X14

CONTRACT NO.: 504485024

FUNCTION 电机柜

PROJECT 天津渤化永利丁辛醇项目

=	FM1	SHEET NO.	10
SCALE	1:1	TOTAL PAGES	13

DRAWING NO. XZS1-48353-A01-FM1-T

单线图

一次设备索引			
设备号	设备名称	数量	物料号
-QAB	真空断路器	1	VD4/P-77
-BCT1	电流互感器	1	CTA-G1K313-0474
-BCT2	电流互感器	1	CTA-G1K313-0474
-BCT3	电流互感器	1	CTA-G1K313-0474
-BAD	电容分压装置	3	DIK-06-B06N1000C-1
-QCE	接地开关	1	ET1-BGE2/3
-FA	避雷器	3	SAS-YH5WZ-10/27-1
-BCN	零序电流互感器	1	CTZ-GLMZ2150501-A1

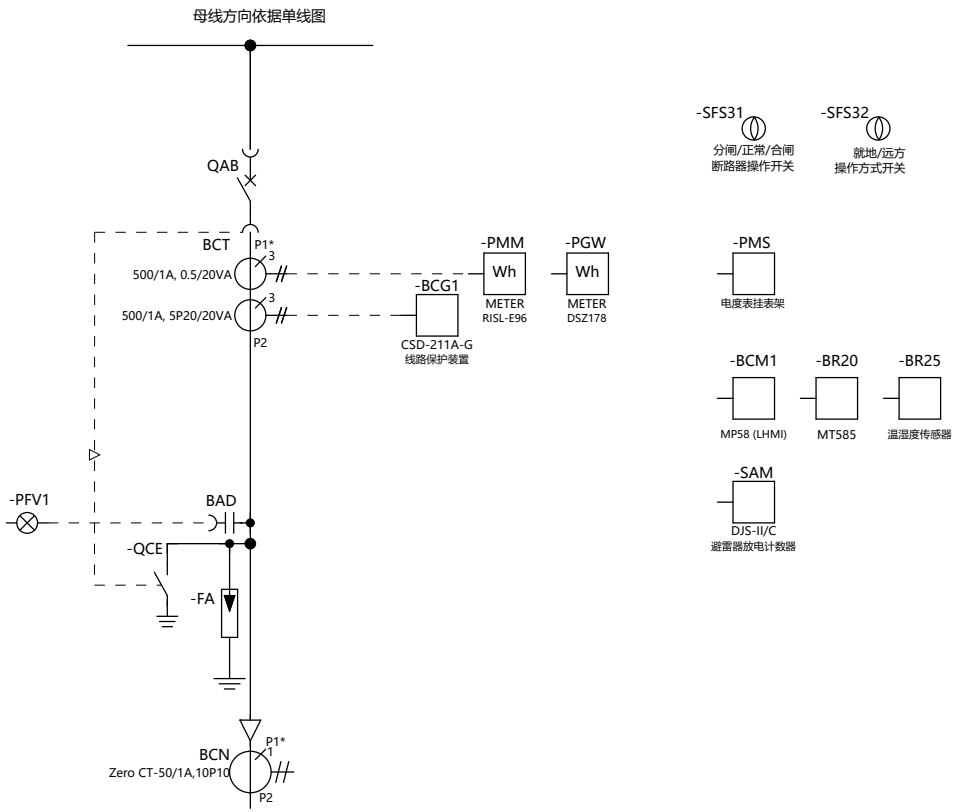

This drawing and information contained thereon is the property of ABB (XIAMEN) Switchgear CO. LTD. and shall not be used, reproduced for any purpose ,or shown to third parties without the written consent of ABB (XIAMEN) Switchgear CO. LTD.

REV.	DESCRIPTION	REV. DATE

DRAWN	XINYU LIU	TITLE	单线图
CHECKED	Jianjun-Wang		
APPROVED	Yongsheng.Li	CONTRACT NO.:	504485024
FIRST DATE	2025/4/28		

FUNCTION: 线路备用柜(采用线路保护)

PROJECT: 天津渤化永利丁辛醇项目

= FM2 | SHEET NO 1 | SCALE 1:1 | TOTAL PAGES 13

DRAWING NO XZS1-48353-A01-FM2-S

断路器弹簧储能电机回路	控制回路	保护与信号回路	加热器回路 电缆室 100W	电缆室照明	低压室照明

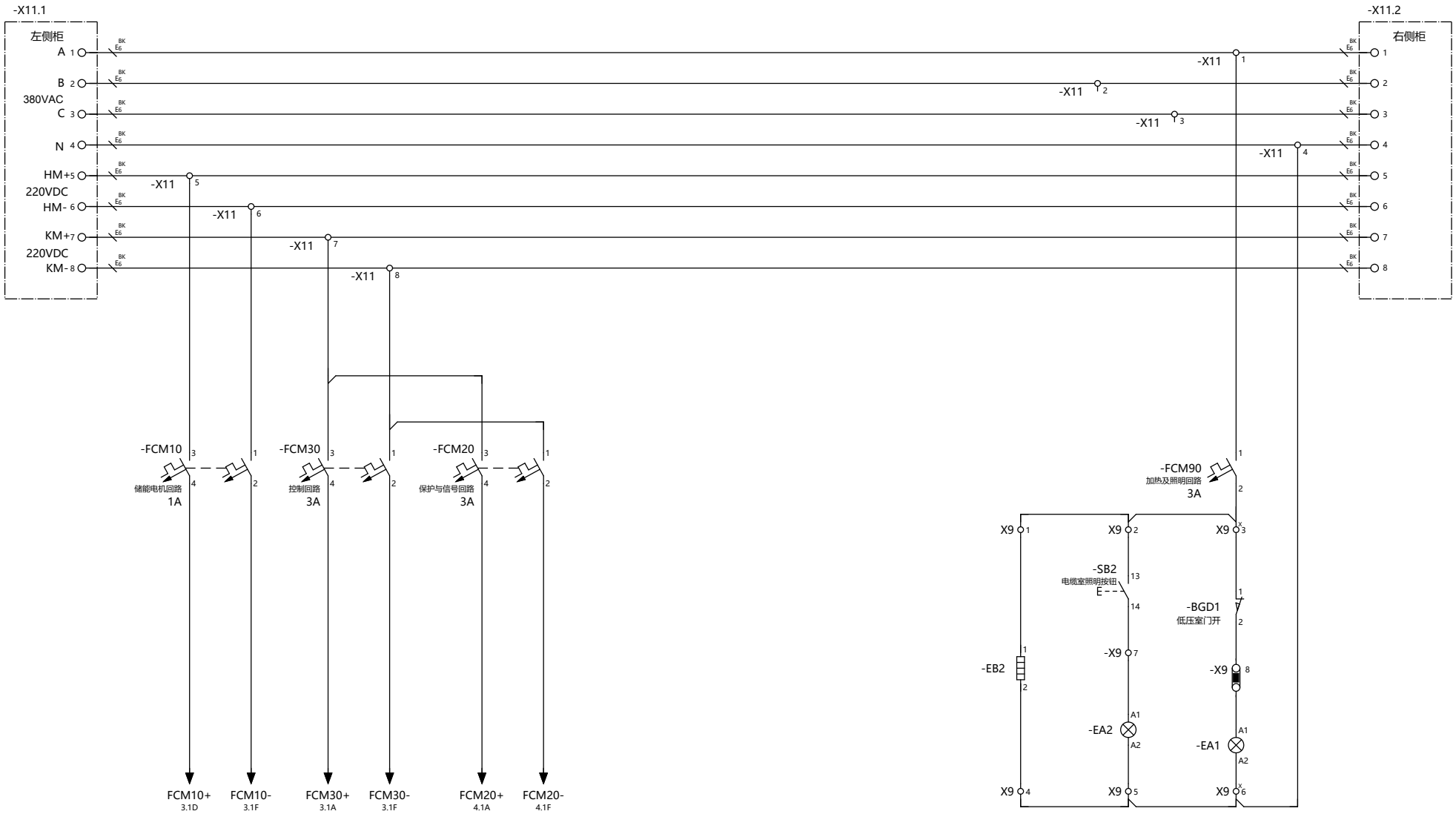

This drawing and information contained thereon is the property of ABB (XIAMEN) Switchgear CO. LTD. and shall not be used, reproduced for any purpose ,or shown to third parties without the written consent of ABB (XIAMEN) Switchgear CO. LTD.

REV.	DESCRIPTION	REV. DATE

DRAWN	XINYU LIU	TITLE	电源小母线回路
CHECKED	Jianjun-Wang		
APPROVED	Yongsheng.Li	CONTRACT NO.:	504485024
FIRST DATE	2025/4/28		

ABB

FUNCTION	线路备用柜(采用线路保护)
PROJECT	天津渤化永利丁辛醇项目

=	FM2	SHEET NO	2
SCALE	1:1	TOTAL PAGES	13
DRAWING NO	XZS1-48353-A01-FM2-S		

断路器弹簧储能电机	已储能指示灯	断路器合闸回路				断路器分闸回路						保护操作电源	带电显示及其闭锁回路
		合闸闭锁	保护合闸	就地合闸	远方合闸	远方分闸	就地分闸	永跳		保护跳闸	备用		

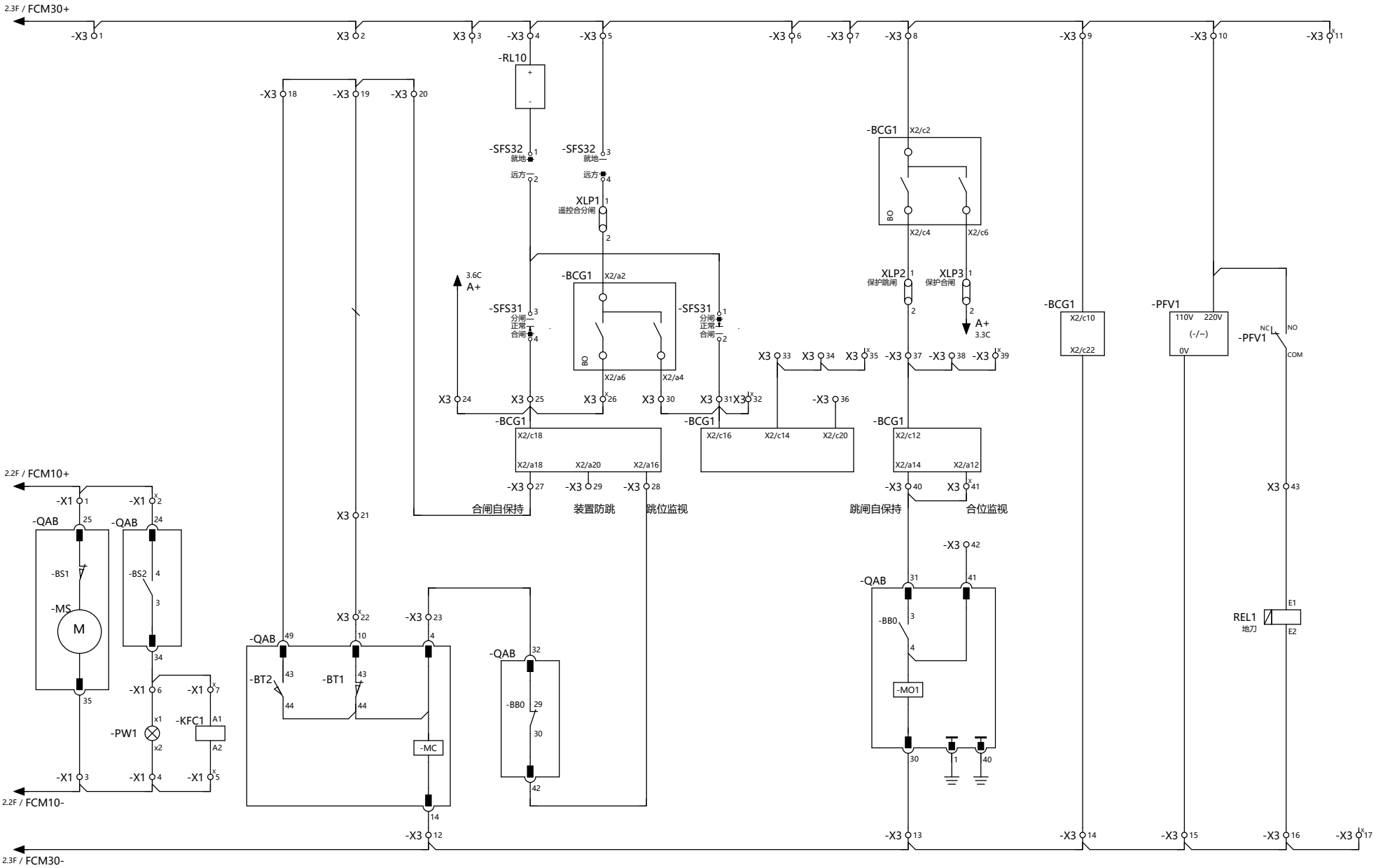

This drawing and information contained thereon is the property of ABB (XIAMEN) Switchgear CO. LTD. and shall not be used, reproduced for any purpose, or shown to third parties without the written consent of ABB (XIAMEN) Switchgear CO. LTD.

REV.	DESCRIPTION	REV. DATE

DRAWN	XINYU LIU	TITLE	控制回路
CHECKED	Jianjun-Wang		
APPROVED	Yongsheng.Li	CONTRACT NO.:	504485024
FIRST DATE	2025/4/28		

ABB

FUNCTION	线路备用柜(采用线路保护)
PROJECT	天津渤化永利丁辛醇项目

= FM2	SHEET NO 3
SCALE 1:1	TOTAL PAGES 13
DRAWING NO	XZS1-48353-A01-FM2-S

断路器状态		断路器手车位置		接地开关状态		MT585电源	多功能表电源	电度表电源	避雷器计数器电源	保护装置辅助电源
合闸	分闸	工作	试验	合闸	分闸					

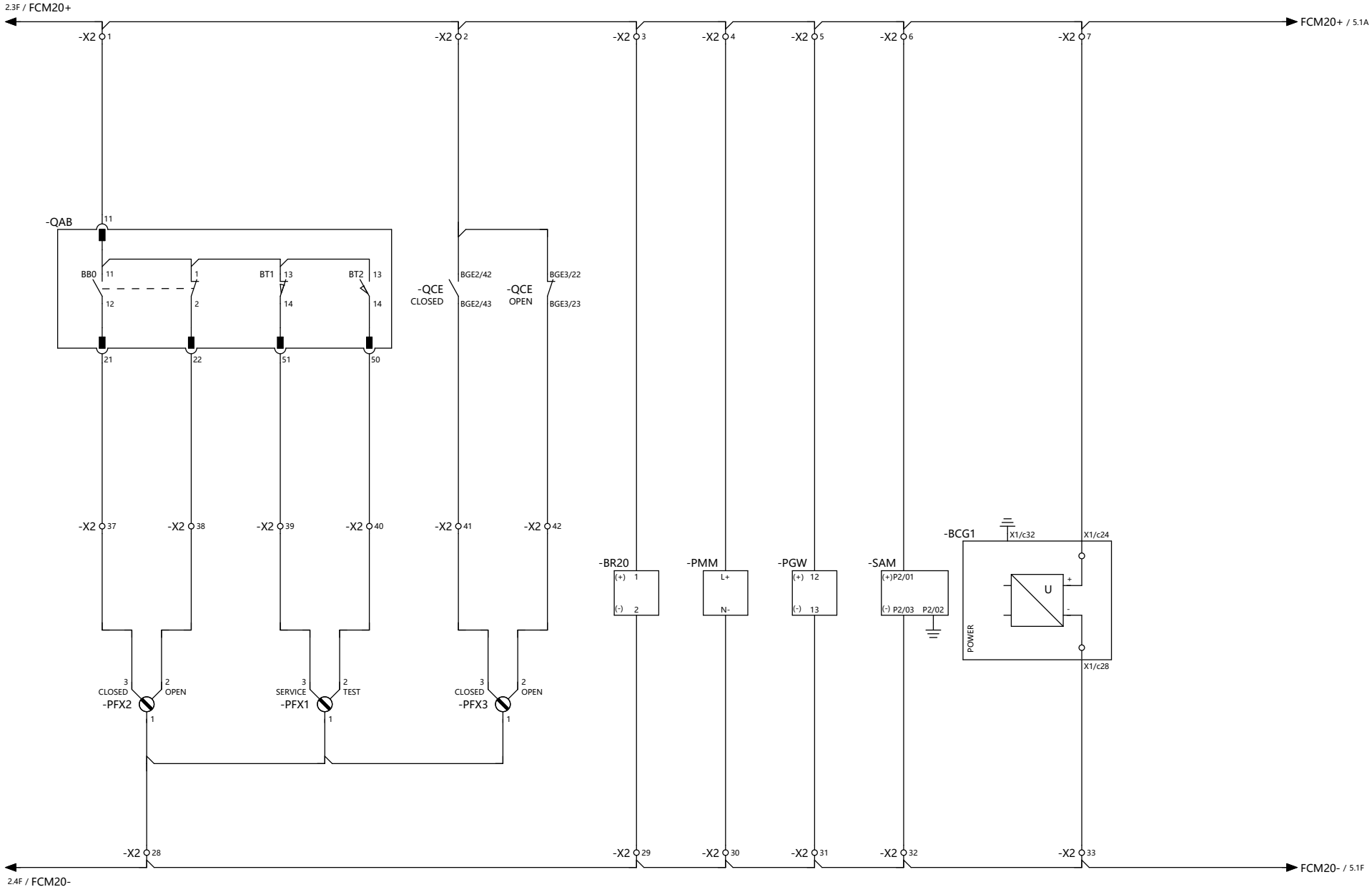

This drawing and information contained thereon is the property of ABB (XIAMEN) Switchgear CO. LTD. and shall not be used, reproduced for any purpose ,or shown to third parties without the written consent of ABB (XIAMEN) Switchgear CO. LTD.

REV.	DESCRIPTION	REV. DATE

DRAWN	XINYU LIU	TITLE	保护与信号回路
CHECKED	Jianjun-Wang		
APPROVED	Yongsheng.Li	CONTRACT NO.:	504485024
FIRST DATE	2025/4/28		

ABB

FUNCTION	线路备用柜(采用线路保护)
PROJECT	天津渤化永利丁辛醇项目

=	FM2	SHEET NO	4
SCALE	1:1	TOTAL PAGES	13
DRAWING NO	XZS1-48353-A01-FM2-S		

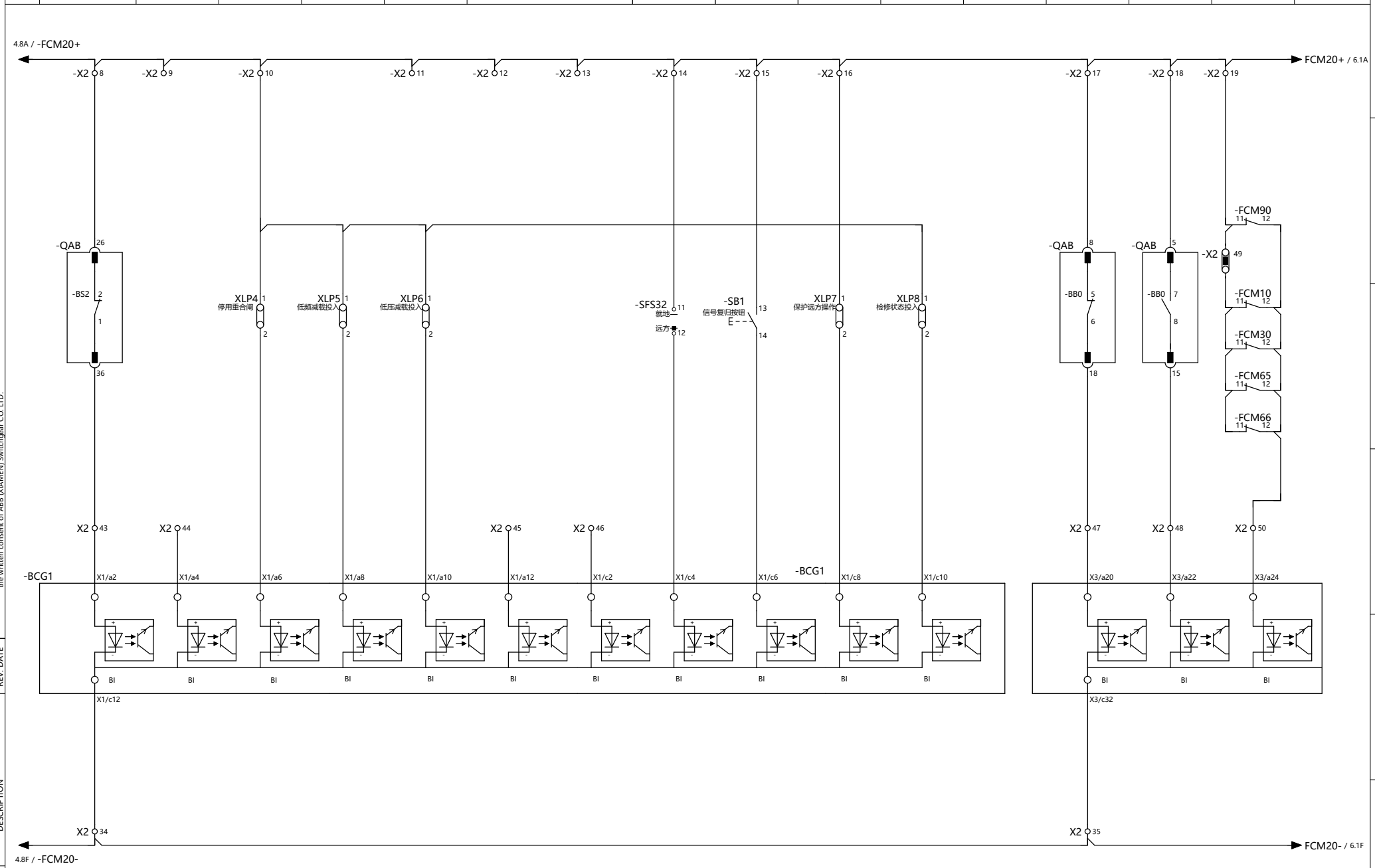

This drawing and information contained thereon is the property of ABB (XIAMEN) Switchgear CO. LTD. and shall not be used, reproduced for any purpose ,or shown to third parties without the written consent of ABB (XIAMEN) Switchgear CO. LTD.

REV.	DESCRIPTION	REV. DATE

DRAWN	XINYU LIU	TITLE	保护与信号回路
CHECKED	Jianjun-Wang		
APPROVED	Yongsheng.Li	CONTRACT NO.:	504485024
FIRST DATE	2025/4/28		

ABB

FUNCTION	线路备用柜(采用线路保护)
PROJECT	天津渤化永利丁辛醇项目

=	FM2	SHEET NO	5
SCALE	1:1	TOTAL PAGES	13
DRAWING NO	XZS1-48353-A01-FM2-S		

断路器手车位置		接地开关状态		邻柜继保装置故障	备用
工作	试验	合闸	分闸		

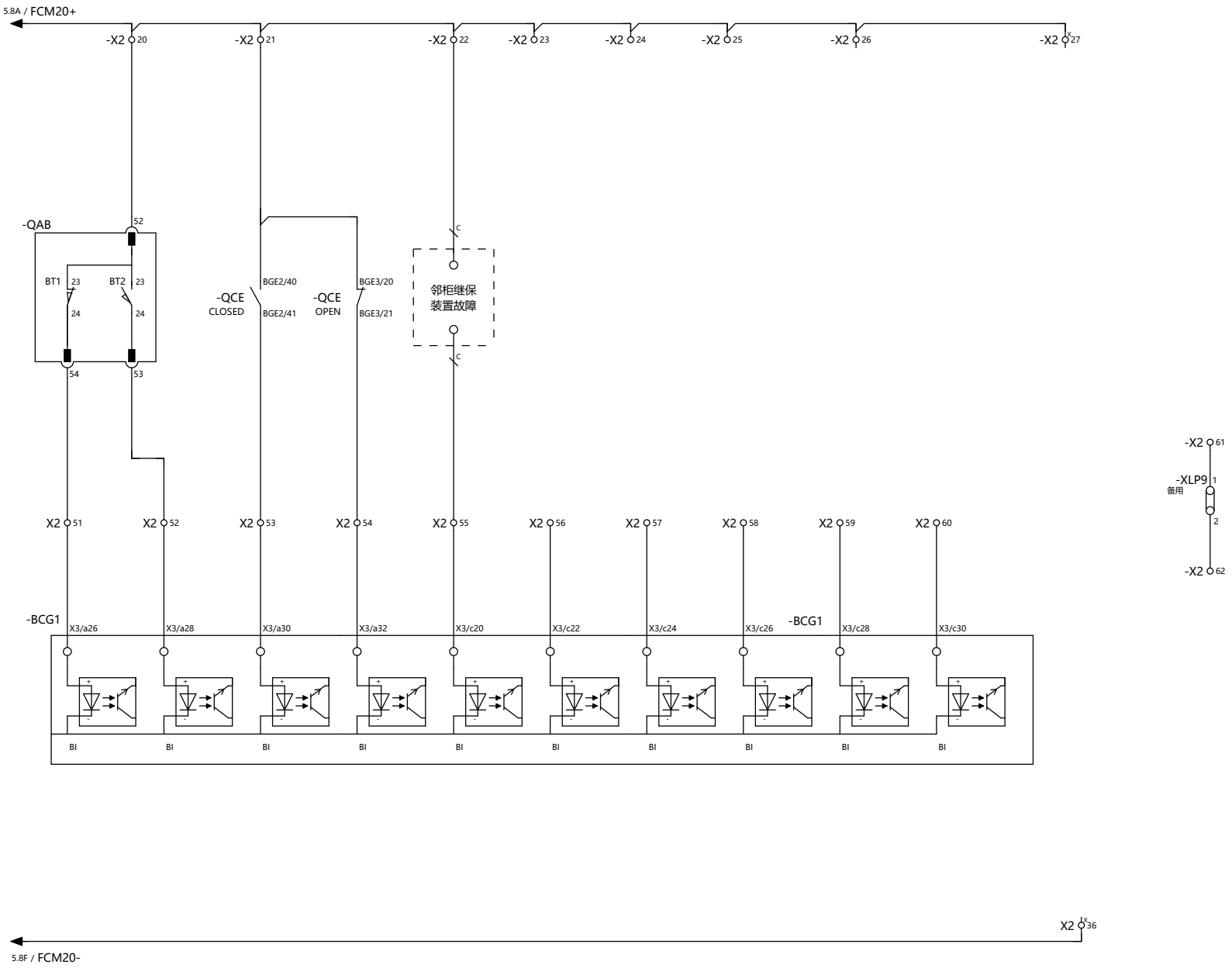

This drawing and information contained thereon is the property of ABB (XIAMEN) Switchgear CO. LTD. and shall not be used, reproduced for any purpose ,or shown to third parties without the written consent of ABB (XIAMEN) Switchgear CO. LTD.

REV.	DESCRIPTION	REV. DATE

DRAWN	XINYU LIU	TITLE	保护与信号回路
CHECKED	Jianjun-Wang		
APPROVED	Yongsheng.Li	CONTRACT NO.:	504485024
FIRST DATE	2025/4/28		

FUNCTION: 线路备用柜(采用线路保护)

PROJECT: 天津渤化永利丁辛醇项目

= FM2 | SHEET NO 6

SCALE 1:1 | TOTAL PAGES 13

DRAWING NO XZS1-48353-A01-FM2-S

断路器已储能	断路器状态		断路器手车位置		接地开关状态		就地/远方选择开关位置	
	合闸	分闸	工作	试验	合闸	分闸	就地	远方

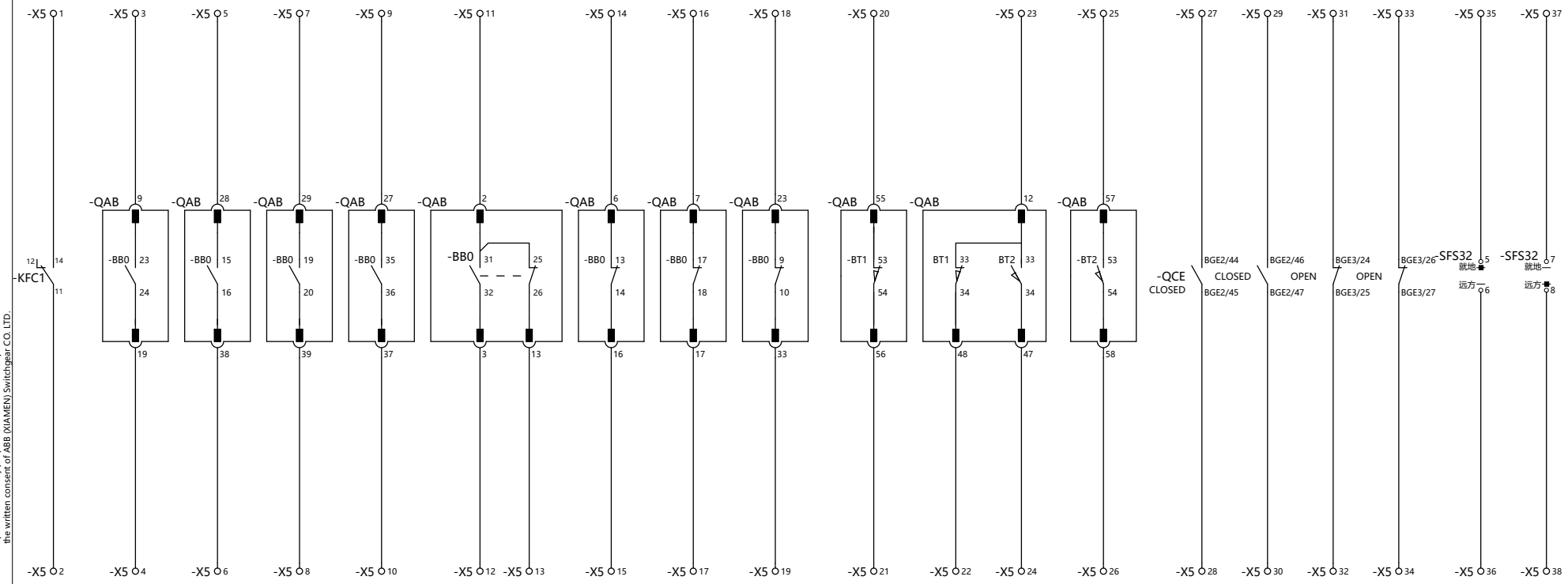

This drawing and information contained thereon is the property of ABB (XIAMEN) Switchgear CO. LTD. and shall not be used, reproduced for any purpose ,or shown to third parties without the written consent of ABB (XIAMEN) Switchgear CO. LTD.

REV.	DESCRIPTION	REV. DATE

DRAWN	XINYU LIU	TITLE	备用回路
CHECKED	Jianjun-Wang		
APPROVED	Yongsheng.Li	CONTRACT NO.:	504485024
FIRST DATE	2025/4/28		

ABB

FUNCTION	线路备用柜(采用线路保护)
PROJECT	天津渤化永利丁辛醇项目

=	FM2	SHEET NO	7
SCALE	1:1	TOTAL PAGES	13
DRAWING NO	XZS1-48353-A01-FM2-S		

保护空开信号	避雷器计数器报警信号	手动跳闸输出	事故总信号	控制回路断线	非保持信号			
					备用	保护动作	运行异常告警	装置故障告警

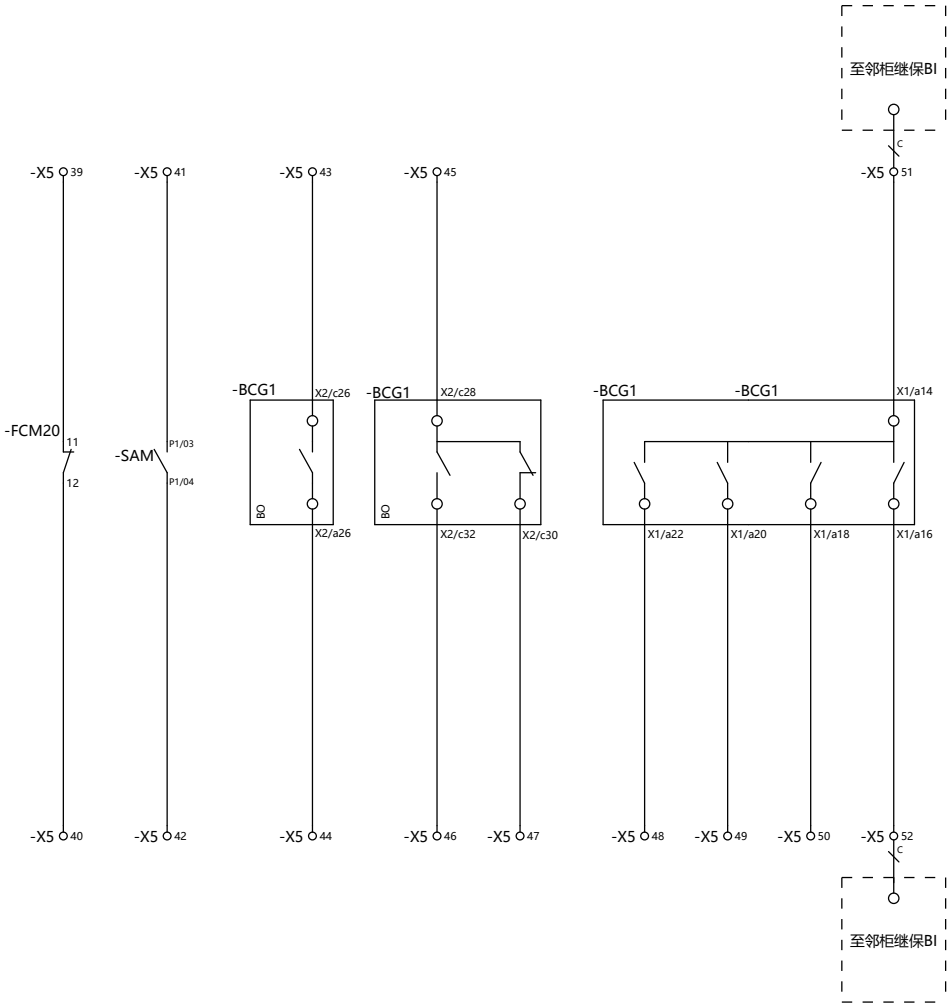

-X5 57 -X5 58 -X5 59 -X5 60 -X5 61

-X5 62 -X5 63 -X5 64 -X5 65 -X5 66

This drawing and information contained thereon is the property of ABB (XIAMEN) Switchgear CO. LTD. and shall not be used, reproduced for any purpose ,or shown to third parties without the written consent of ABB (XIAMEN) Switchgear CO. LTD.

REV.	DESCRIPTION	REV. DATE

DRAWN	XINYU LIU	TITLE	备用回路
CHECKED	Jianjun-Wang		
APPROVED	Yongsheng.Li	CONTRACT NO.:	504485024
FIRST DATE	2025/4/28		

ABB

FUNCTION	线路备用柜(采用线路保护)
PROJECT	天津渤化永利丁辛醇项目

=	FM2	SHEET NO	8
SCALE	1:1	TOTAL PAGES	13
DRAWING NO	XZS1-48353-A01-FM2-S		

通讯小母线	保护对时口	避雷器计数器通讯	多功能表485通讯

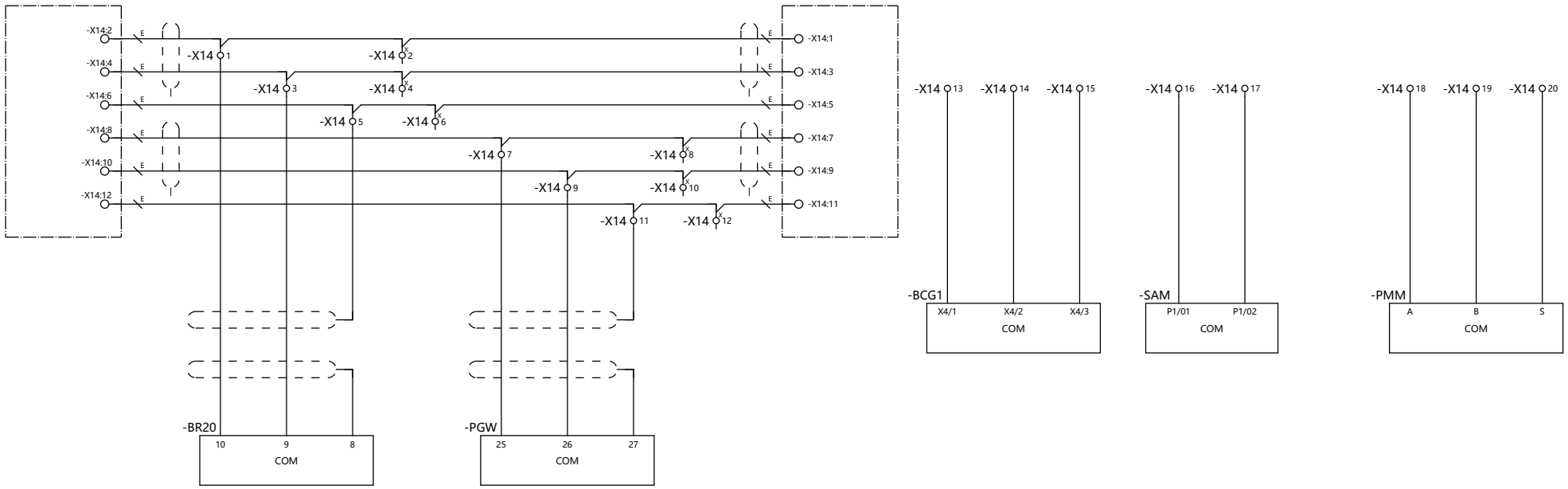

This drawing and information contained thereon is the property of ABB (XIAMEN) Switchgear CO. LTD. and shall not be used, reproduced for any purpose ,or shown to third parties without the written consent of ABB (XIAMEN) Switchgear CO. LTD.

REV.	DESCRIPTION	REV. DATE

DRAWN	XINYU LIU	TITLE	通信回路
CHECKED	Jianjun-Wang		
APPROVED	Yongsheng.Li	CONTRACT NO.:	504485024
FIRST DATE	2025/4/28		

ABB

FUNCTION	线路备用柜(采用线路保护)
PROJECT	天津渤化永利丁辛醇项目

=	FM2	SHEET NO	9
SCALE	1:1	TOTAL PAGES	13
DRAWING NO	XZS1-48353-A01-FM2-S		

MT585 24VDC输出	温湿度控制电源	MT585通讯接口 (与MB585通讯接口)	温湿度控制器通讯	HMI 电源及通讯 示意图

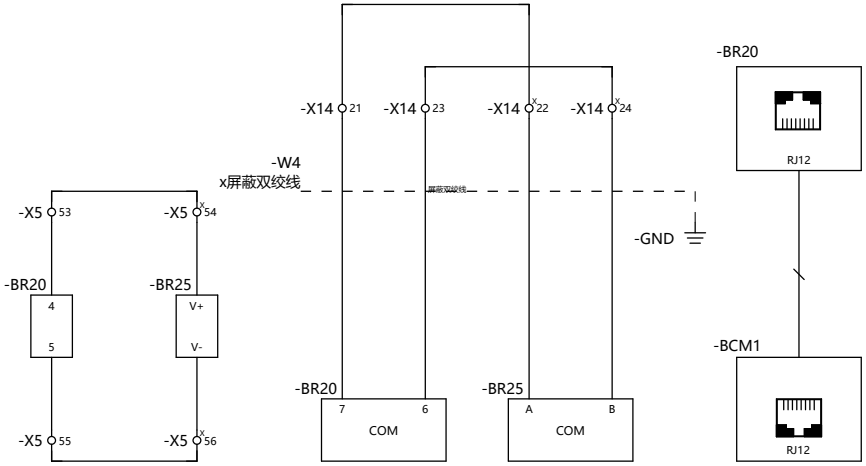

This drawing and information contained thereon is the property of ABB (XIAMEN) Switchgear CO. LTD. and shall not be used, reproduced for any purpose ,or shown to third parties without the written consent of ABB (XIAMEN) Switchgear CO. LTD.

REV.	DESCRIPTION	REV. DATE

DRAWN	XINYU LIU	TITLE	通信回路
CHECKED	Jianjun-Wang		
APPROVED	Yongsheng.Li	CONTRACT NO.:	504485024
FIRST DATE	2025/4/28		

FUNCTION	线路备用柜(采用线路保护)
PROJECT	天津渤化永利丁辛醇项目

=	FM2	SHEET NO	10
SCALE	1:1	TOTAL PAGES	13
DRAWING NO	XZS1-48353-A01-FM2-S		

电压小母线

计量小母线

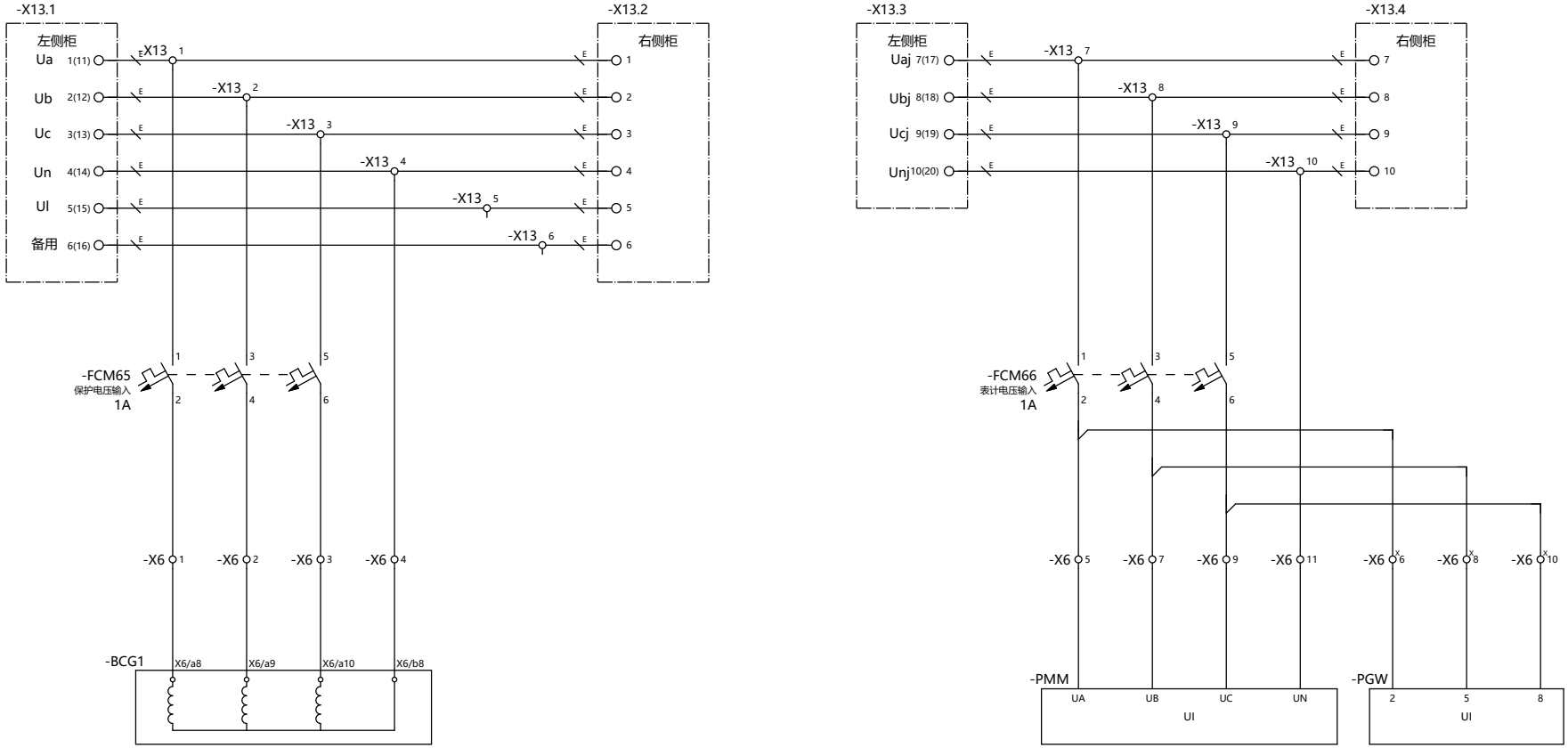

This drawing and information contained thereon is the property of ABB (XIAMEN) Switchgear CO. LTD. and shall not be used, reproduced for any purpose, or shown to third parties without the written consent of ABB (XIAMEN) Switchgear CO. LTD.

REV.	DESCRIPTION	REV. DATE

DRAWN	XINYU LIU	TITLE	电压小母线
CHECKED	Jianjun-Wang		
APPROVED	Yongsheng.Li	CONTRACT NO.:	504485024
FIRST DATE	2025/4/28		

FUNCTION: 线路备用柜(采用线路保护)

PROJECT: 天津渤化永利丁辛醇项目

= FM2 | SHEET NO 11 | SCALE 1:1 | TOTAL PAGES 13

DRAWING NO XZS1-48353-A01-FM2-S

测量电流输入 | 保护电流输入 | 零序电流输入

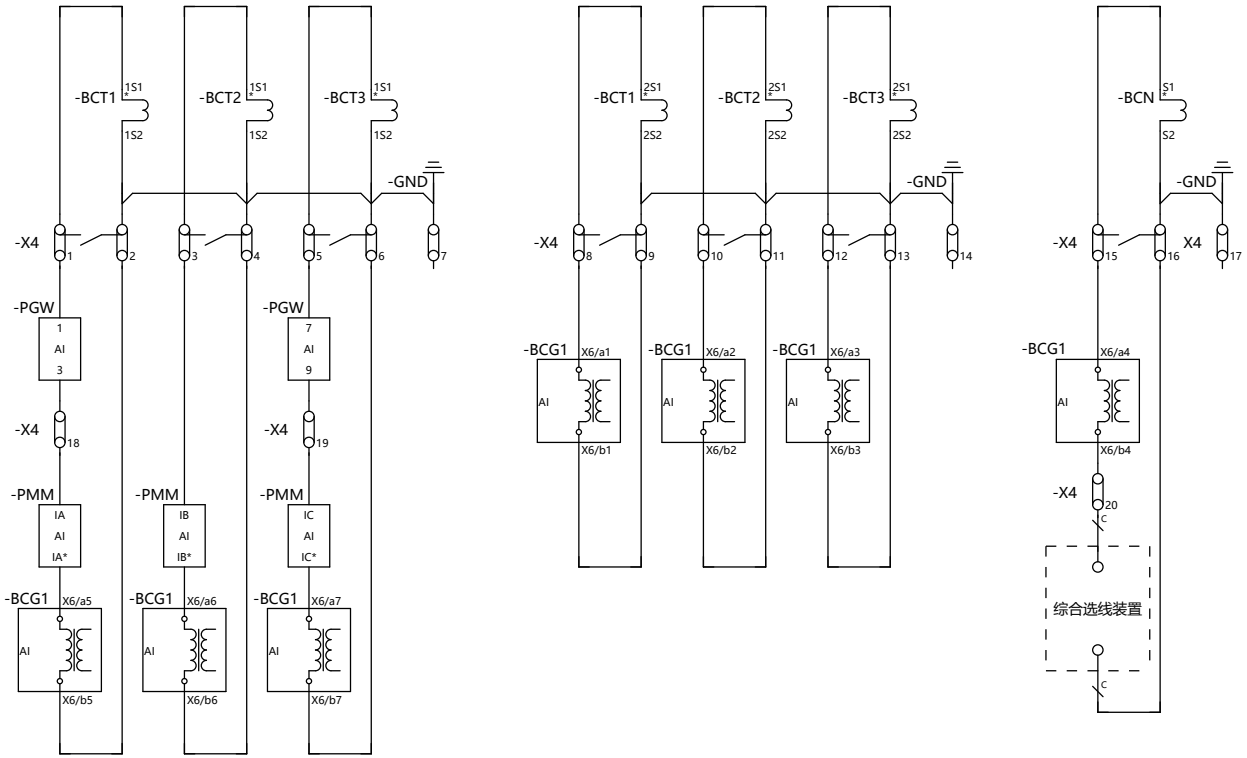

This drawing and information contained thereon is the property of ABB (XIAMEN) Switchgear CO. LTD. and shall not be used, reproduced for any purpose ,or shown to third parties without the written consent of ABB (XIAMEN) Switchgear CO. LTD.

REV.	DESCRIPTION	REV. DATE

DRAWN	XINYU LIU	TITLE	电流回路
CHECKED	Jianjun-Wang		
APPROVED	Yongsheng.Li	CONTRACT NO.:	504485024
FIRST DATE	2025/4/28		

FUNCTION: 线路备用柜(采用线路保护)

PROJECT: 天津渤化永利丁辛醇项目

= FM2 | SHEET NO 12 | SCALE 1:1 | TOTAL PAGES 13

DRAWING NO XZS1-48353-A01-FM2-S

VD4

-QAB

VD4/P-77

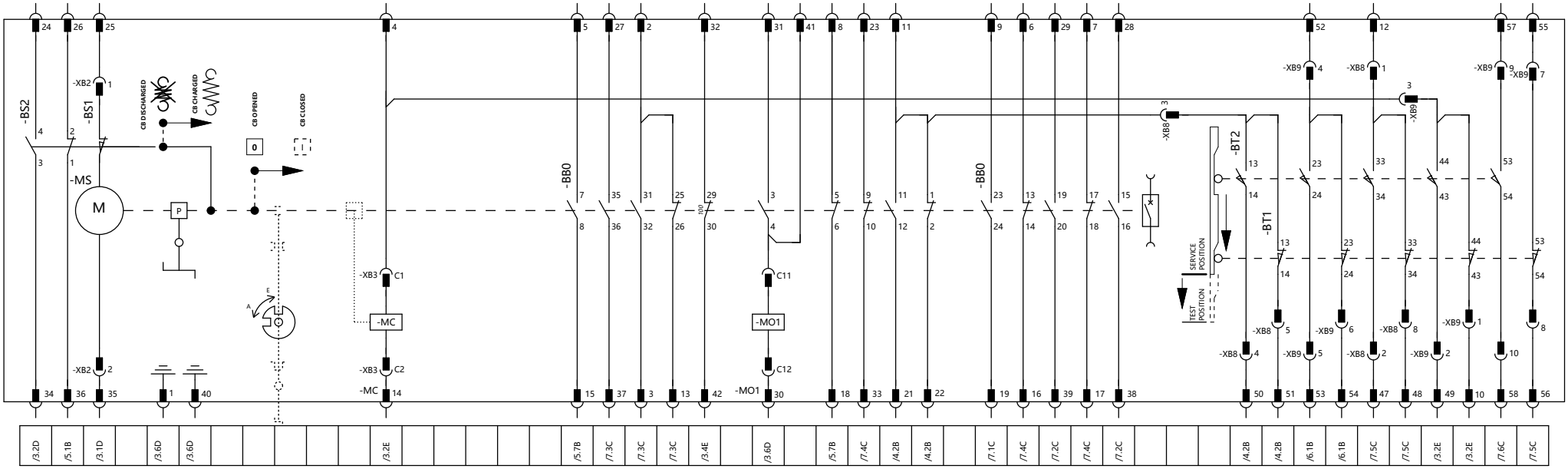

/3.2D /5.1B /3.1D /3.6D /3.6D /3.2E /5.7B /7.3C /7.3C /7.3C /3.4E /3.6D /5.7B /7.4C /4.2B /4.2B /7.1C /7.4C /7.2C /7.4C /7.2C /4.2B /4.2B /6.1B /6.1B /7.5C /7.5C /3.2E /3.2E /7.6C /7.5C

接地开关与断路器手车具有可靠的机械闭锁： A)
只有当断路器手车位于试验位置时，才允许操作接地开关 B)
只有当接地开关处于分状态时,断路器手车才允许由试验位置推入运行位置。

电气控制接线图/接点位置参考：
此图所示状态为：断路器手车工作位置 断路器处于分闸状态 操作机构弹簧未储能

名称	描述	备注
-BS1	储能电机限位开关	
-MS	弹簧操作机构储能电机	
-MC	合闸脱扣器	
-MO1	第一分闸脱扣器	

名称	描述	备注
-BS2	合闸弹簧储能/未储能信号触点	
-BB0	与断路器主轴联动的辅助开关	
-BT1	限位开关(手车位于运行位置)	
-BT2	限位开关(手车位于试验位置)	

This drawing and information contained thereon is the property of ABB (XIAMEN) Switchgear CO. LTD. and shall not be used, reproduced for any purpose, or shown to third parties without the written consent of ABB (XIAMEN) Switchgear CO. LTD.

REV.	DESCRIPTION	REV. DATE

DRAWN	XINYU LIU	TITLE	断路器接线图
CHECKED	Jianjun-Wang		
APPROVED	Yongsheng.Li	CONTRACT NO.:	504485024
FIRST DATE	2025/4/28		

FUNCTION: 线路备用柜(采用线路保护)

PROJECT: 天津渤化永利丁辛醇项目

= FM2 | SHEET NO 13 | SCALE 1:1 | TOTAL PAGES 13

DRAWING NO XZS1-48353-A01-FM2-S

设备清单(柜体)

序号	设备号	设备名称	物料号	数量	制造商	型号	设备参数
1	-BAD	电容分压装置	DIK-06-B06N1000C-1	3	/	B06N-1000C-1	Un=6kV
2	-BCN	零序电流互感器	CTZ-GLMZ2150501-A1	1	ABB	LMZ215-80-120	50/1A,CORE:2VA/10P10,120mm
3	-BCT1	电流互感器	CTA-G1K313-0474	1	ABB	LZZBJ9-12/150b/2	31.5KA/3SEC,500/1A,C1:0.5/20VA;C2:5P20/20VA;
4	-BCT2	电流互感器	CTA-G1K313-0474	1	ABB	LZZBJ9-12/150b/2	31.5KA/3SEC,500/1A,C1:0.5/20VA;C2:5P20/20VA;
5	-BCT3	电流互感器	CTA-G1K313-0474	1	ABB	LZZBJ9-12/150b/2	31.5KA/3SEC,500/1A,C1:0.5/20VA;C2:5P20/20VA;
6	-EA2	LED电缆室照明灯	L-CL10-1C-W-AA-CA	1	PEAKS	CL10-1C-W-AA	AC198-242V
7	-EB2	加热器	EP-HEATER-100W	1	SANYANG	1FZEK833B	100W
8	-FA	避雷器	SAS-YH5WZ-10/27-1	3	西安神电	YH5WZ-10/27	额定电压:10KV;持续运行电压:8.0KV;雷电冲击残压:27KV(8/20US 5KA);2ms方波通流容量:400A
9	-QAB	真空断路器	VD4/P-77	1	ABB	VD4	NEW VD4 P(旋转式辅助开关) WITHOUT RL1 WITH 7NO+7NC WITHOUT MT
10	-QCE	接地开关	ET1-BGE2/3	1	ABB	ET1	ET1 WITH BGE2&BGE3
11	-REL1	闭锁电磁铁	EP-MAGNET	1	PEAKS	EM10-S	/

This drawing and information contained thereon is the property of ABB (XIAMEN) Switchgear CO. LTD. and shall not be used, reproduced for any purpose ,or shown to third parties without the written consent of ABB (XIAMEN) Switchgear CO. LTD.

REV.	DESCRIPTION	REV. DATE

DRAWN	XINYU LIU	TITLE	设备清单(柜体)
CHECKED	Jianjun-Wang		
APPROVED	Yongsheng.Li	CONTRACT NO.:	504485024
FIRST DATE	2025/4/28		

FUNCTION: 线路备用柜(采用线路保护)

PROJECT: 天津渤化永利丁辛醇项目

= FM2 | SHEET NO 1 | SCALE 1:1 | TOTAL PAGES 3

DRAWING NO XZS1-48353-A01-FM2-E

设备清单(低压室面板)

序号	设备号	设备名称	物料号	数量	制造商	型号	设备参数
1	-BCG1	线路保护装置	CS-BHYL-01	1	北京四方	CSD-211A-G	辅助电源：220V DC;电流输入：1A;电压输入：AC100V;
2	-BCM1	就地显示器	RLY-MP58	1	ABB	MP58 （LHMI）	/
3	-PFV1	强制型带电显示器	VIO-DXN-Q-A10-1	1	LEELEN	DXN-Q	DXN-Q 强制型带电显示器UGZS1 3KV/6KV/10kV，辅助电源：AC/DC 220/110V
4	-PFX1	手车位置指示	PIL-ADWZ25-B/2	1	LEELEN	ADWZ25-B/2	98-242V AC/DC,TRUCK POSITION
5	-PFX2	断路器状态指示	PIL-ADWZ25-K/2	1	LEELEN	ADWZ25-K/2	98-242V AC/DC,CB. STATUS
6	-PFX3	接地开关状态指示	PIL-ADWZ25-E/1	1	LEELEN	ADWZ25-E/1	98-242V AC/DC,EARTHING SWITCH STATUS
7	-PMM	多功能表	CS-BHYL-09	1	川泽电气	RISL-E96-5A-N-N-N-N	装置电源：DC220V ;电流输入：1A;电压输入：AC100V
8	-PW1	白色指示灯	LSA-CL2-520C	1	ABB	CL2-520C	Un=220V DC,WHITE
9	-RL10	五防锁	CS-BHYL-08	1	珠海优特电力科技股份有限公司	DNBS-2J	/
10	-SAM	高灵敏避雷器放电计数器	SAK-DJSII-C-11	1	安徽通辰	DJS-II/C	Un=110~220DC/AC 4.5m;3m
11	-SB1	黑色按钮	PBA-CP1-10B-11	1	ABB	CP1-10B-11	1NO+1NC,不带标牌套
12	-SB2	黑色自锁按钮	PBA-CP2-10B-11	1	ABB	CP2-10B-11	1NO+1NC,不带标牌套
13	-SFS31	选择开关	SSJ-E01-2-401	1	JIANGYIN CHANGJIANG	LW38D-164B0339/2PY-DAN-AX	
14	-SFS32	选择开关	SSJ-E02-4-402	1	JIANGYIN CHANGJIANG	LW38D-164N1257/4P-AX	
15	-XLP1	插拔式压板	T-JY3-2	1	UPUN	JY3-2	驼色
16	-XLP2	插拔式压板	T-JY3-2	1	UPUN	JY3-2	驼色
17	-XLP3	插拔式压板	T-JY3-2	1	UPUN	JY3-2	驼色
18	-XLP4	插拔式压板	T-JY3-2	1	UPUN	JY3-2	驼色
19	-XLP5	插拔式压板	T-JY3-2	1	UPUN	JY3-2	驼色
20	-XLP6	插拔式压板	T-JY3-2	1	UPUN	JY3-2	驼色
21	-XLP7	插拔式压板	T-JY3-2	1	UPUN	JY3-2	驼色
22	-XLP8	插拔式压板	T-JY3-2	1	UPUN	JY3-2	驼色
23	-XLP9	插拔式压板	T-JY3-2	1	UPUN	JY3-2	驼色

This drawing and information contained thereon is the property of ABB (XIAMEN) Switchgear CO. LTD. and shall not be used, reproduced for any purpose ,or shown to third parties without the written consent of ABB (XIAMEN) Switchgear CO. LTD.

REV.	DESCRIPTION	REV. DATE

DRAWN	XINYU LIU	TITLE	设备清单(低压室面板)
CHECKED	Jianjun-Wang		
APPROVED	Yongsheng.Li	CONTRACT NO.:	504485024
FIRST DATE	2025/4/28		

FUNCTION: 线路备用柜(采用线路保护)

PROJECT: 天津渤化永利丁辛醇项目

= FM2 | SHEET NO 2 | SCALE 1:1 | TOTAL PAGES 3

DRAWING NO XZS1-48353-A01-FM2-E

设备清单(低压室)

序号	设备号	设备名称	物料号	数量	制造商	型号	设备参数
1	-BGD1	微动开关	EP-LVMS	1	PEAKS	TS11-001-01	MECHANICAL LIFE TIME>1000000TIMES
2	-BR20	TEMPERATURE MONITOR	RLY-MT585	1	ABB	MT585	100-240VDC/AC
3	-BR25	Humidity & Temperature Sensor	1YHT010000P0009	1	/	/	/
4	-EA1	LED低压室照明灯	L-CL10-1C-W-AA	1	PEAKS	CL10-1C-W-AA	SUPPLY: AC198~242V; POWER: <4W
5	-FCM10	微型空气开关	MCBA-202M-C1DC;MBDA-S2C-H11R	1;1	ABB	S202M-C1DC;S2C-H11R	Un=440V DC,In=1A,2-POLE
6	-FCM20	微型空气开关	MCBA-202M-C3DC;MBDA-S2C-H11R	1;1	ABB	S202M-C3DC;S2C-H11R	Un=440V DC,In=3A,2-POLE
7	-FCM30	微型空气开关	MCBA-202M-C3DC;MBDA-S2C-H11R	1;1	ABB	S202M-C3DC;S2C-H11R	Un=440V DC,In=3A,2-POLE
8	-FCM65	微型空气开关	MCBA-2030001R0014;MBDA-S2C-H11R	1;1	ABB	S203-C1;S2C-H11R	Un=400V AC,In=1A,3-POLE
9	-FCM66	微型空气开关	MCBA-2030001R0014;MBDA-S2C-H11R	1;1	ABB	S203-C1;S2C-H11R	Un=400V AC,In=1A,3-POLE
10	-FCM90	微型空气开关	MCBA-2010001R0034;MBDA-S2C-H11R	1;1	ABB	S201-C3;S2C-H11R	Un=230V AC,In=3A,1-POLE
11	-KFC1	中间继电器	RLY-CRMX220DC4	1	ABB	CRMX220DC4	CR-MX220DC4,UN=220V DC
12	-PGW	电能表	CS-BHYL-07	1	Wisdom	DSZ178	装置电源：DC220V;电流输入：1A;电压输入：AC100V
13	-PMS	电度表挂表架	PMM-AUX-01	1	/	270	

This drawing and information contained thereon is the property of ABB (XIAMEN) Switchgear CO. LTD. and shall not be used, reproduced for any purpose ,or shown to third parties without the written consent of ABB (XIAMEN) Switchgear CO. LTD.

REV.	DESCRIPTION	REV. DATE

DRAWN	XINYU LIU	TITLE	设备清单(低压室)
CHECKED	Jianjun-Wang		
APPROVED	Yongsheng.Li	CONTRACT NO.:	504485024
FIRST DATE	2025/4/28		

FUNCTION: 线路备用柜(采用线路保护)

PROJECT: 天津渤化永利丁辛醇项目

= FM2 | SHEET NO 3 | SCALE 1:1 | TOTAL PAGES 3

DRAWING NO XZS1-48353-A01-FM2-E

REV.	DESCRIPTION	REV. DATE

This drawing and information contained thereon is the property of ABB (XIAMEN) Switchgear CO. LTD. and shall not be used, reproduced for any purpose ,or shown to third parties without the written consent of ABB (XIAMEN) Switchgear CO. LTD.

==A01=FM2+-X1

备注	外引电缆	设备	线号	端子号	型号	线号	设备	外引电缆	备注
		-FCM10:4		1	NEK4		-QAB:25		
				2	NEK4		-QAB:24		
		-FCM10:2		3	NEK4		-QAB:35		
				4	NEK4		-PW1:x2		
				5	NEK4		-KFC1:A2		
		-QAB:34		6	NEK4		-PW1:x1		
				7	NEK4		-KFC1:A1		

☆ 柜间小母线,随柜提供

△ 柜间控制电路(由客户自备)

短接排

分隔板

(测试短接片

O 其他

REV.	DESCRIPTION	REV. DATE

DRAWN	XINYU LIU	TITLE
CHECKED	Jianjun-Wang	端子图表 ==A01=FM2+-X1
APPROVED	Yongsheng.Li	CONTRACT NO.:
FIRST DATE	2025/4/28	504485024

FUNCTION 线路备用柜(采用线路保护)

PROJECT 天津渤化永利丁辛醇项目

=	FM2	SHEET NO. 1
SCALE	1:1	TOTAL PAGES 12
DRAWING NO.	XZS1-48353-A01-FM2-T	

REV.	DESCRIPTION	REV. DATE

This drawing and information contained thereon is the property of ABB (XIAMEN) Switchgear CO. LTD. and shall not be used, reproduced for any purpose ,or shown to third parties without the written consent of ABB (XIAMEN) Switchgear CO. LTD.

==A01=FM2+-X2

备注	外引电缆	设备	线号	端子号	型号	线号	设备	外引电缆	备注
		-FCM20:4		1	NEK4		-QAB:11		
				2	NEK4		-QCE:BGE2/42		
				3	NEK4		-BR20:1		
				4	NEK4		-PMM:L+		
				5	NEK4		-PGW:12		
				6	NEK4		-SAM:P2/01		
				7	NEK4		-BCG1:X1/c24		
				8	NEK4		-QAB:26		
				9	NEK4				
				10	NEK4		-XLP4:1		
				11	NEK4				
				12	NEK4				
				13	NEK4				
				14	NEK4		-SFS32:11		
				15	NEK4		-SB1:13		
				16	NEK4		-XLP7:1		
				17	NEK4		-QAB:8		
				18	NEK4		-QAB:5		
				19	NEK4		-FCM90:11		
				20	NEK4		-QAB:52		
				21	NEK4		-QCE:BGE2/40		
	△	-邻柜继保装置故障		22	NEK4				
				23	NEK4				
				24	NEK4				
				25	NEK4				
				26	NEK4				
				27	NEK4				
		-FCM20:2		28	NEK4		-PFX2:1		
				29	NEK4		-BR20:2		
				30	NEK4		-PMM:N-		
				31	NEK4		-PGW:13		
				32	NEK4		-SAM:P2/03		
				33	NEK4		-BCG1:X1/c28		
				34	NEK4		-BCG1:X1/c12		
				35	NEK4		-BCG1:X3/c32		
				36	NEK4				
		-QAB:21		37	NEK4		-PFX2:3		
		-QAB:22		38	NEK4		-PFX2:2		
		-QAB:51		39	NEK4		-PFX1:3		
		-QAB:50		40	NEK4		-PFX1:2		
		-QCE:BGE2/43		41	NEK4		-PFX3:3		
		-QCE:BGE3/23		42	NEK4		-PFX3:2		
		-QAB:36		43	NEK4		-BCG1:X1/a2		
				44	NEK4		-BCG1:X1/a4		
				45	NEK4		-BCG1:X1/a12		
				46	NEK4		-BCG1:X1/c2		
		-QAB:18		47	NEK4		-BCG1:X3/a20		
		-QAB:15		48	NEK4		-BCG1:X3/a22		
		-FCM10:11		49	RCT4SW		-FCM90:11		
		-FCM66:12		50	NEK4		-BCG1:X3/a24		
		-QAB:54		51	NEK4		-BCG1:X3/a26		
		-QAB:53		52	NEK4		-BCG1:X3/a28		
		-QCE:BGE2/41		53	NEK4		-BCG1:X3/a30		
		-QCE:BGE3/21		54	NEK4		-BCG1:X3/a32		

☆ 柜间小母线,随柜提供

△ 柜间控制电路(由客户自备)

短接排

✕ 分隔板

(测试短接片

O 其他

REV.	DESCRIPTION	REV. DATE

DRAWN	XINYU LIU	TITLE
CHECKED	Jianjun-Wang	端子图表 ==A01=FM2+-X2
APPROVED	Yongsheng.Li	CONTRACT NO.:
FIRST DATE	2025/4/28	504485024

FUNCTION 线路备用柜(采用线路保护)

PROJECT 天津渤化永利丁辛醇项目

=	FM2	SHEET NO.	2
SCALE	1:1	TOTAL PAGES	12

DRAWING NO. XZS1-48353-A01-FM2-T

==A01=FM2+-X2

备注	外引电缆	设备	线号	型号	端子号	线号	设备	外引电缆	备注
		-BCG1:X3/c20		NEK4	ı 55		-BCG1:X3/c20	△	
		-BCG1:X3/c22		NEK4	ı 56				
		-BCG1:X3/c24		NEK4	ı 57				
		-BCG1:X3/c26		NEK4	ı 58				
		-BCG1:X3/c28		NEK4	ı 59				
		-BCG1:X3/c30		NEK4	ı 60				
		-XLP9:1		NEK4	ı 61				
		-XLP9:2		NEK4	ı 62				

☆ 柜间小母线,厢柜提供
△ 柜间控制电路(由客户自备)
短接排
分隔板
测试短接片
其他

This drawing and information contained thereon is the property of ABB (XIAMEN) Switchgear CO. LTD. and shall not be used, reproduced for any purpose ,or shown to third parties without the written consent of ABB (XIAMEN) Switchgear CO. LTD.

REV.	DESCRIPTION	REV. DATE

DRAWN	XINYU LIU	TITLE	端子图表 ==A01=FM2+-X2
CHECKED	Jianjun-Wang		
APPROVED	Yongsheng.Li	CONTRACT NO.:	504485024
FIRST DATE	2025/4/28		

FUNCTION: 线路备用柜(采用线路保护)

PROJECT: 天津渤化永利丁辛醇项目

= FM2 | SHEET NO 2.a
SCALE 1:1 | TOTAL PAGES 12
DRAWING NO XZS1-48353-A01-FM2-T

REV.	DESCRIPTION	REV. DATE

This drawing and information contained thereon is the property of ABB (XIAMEN) Switchgear CO. LTD. and shall not be used, reproduced for any purpose ,or shown to third parties without the written consent of ABB (XIAMEN) Switchgear CO. LTD.

==A01=FM2+-X3

备注	外引电缆	设备	线号	端子号	型号	线号	设备	外引电缆	备注
				1	NEK4		-FCM30:4		
				2	NEK4				
				3	NEK4				
				4	NEK4		-RL10:+		
				5	NEK4		-SFS32:3		
				6	NEK4				
				7	NEK4				
				8	NEK4		-BCG1:X2/c2		
				9	NEK4		-BCG1:X2/c10		
				10	NEK4		-PFV1:220V		
				11	NEK4				
		-FCM30:2		12	NEK4		-QAB:14		
				13	NEK4		-QAB:30		
				14	NEK4		-BCG1:X2/c22		
				15	NEK4		-PFV1:0V		
				16	NEK4		-REL1:E2		
				17	NEK4				
				18	NEK4		-QAB:49		
				19	NEK4		-X3:21		
				20	NEK4		-X3:27		
				21	NEK4		-X3:19		
				22	NEK4		-QAB:10		
		-QAB:32		23	NEK4		-QAB:4		
				24	NEK4		-XLP3:2		
		-BCG1:X2/c18		25	NEK4		-SFS31:4		
				26	NEK4		-BCG1:X2/a6		
		-X3:20		27	NEK4		-BCG1:X2/a18		
		-QAB:42		28	NEK4		-BCG1:X2/a16		
				29	NEK4		-BCG1:X2/a20		
				30	NEK4		-BCG1:X2/a4		
		-SFS31:2		31	NEK4		-BCG1:X2/c16		
				32	NEK4				
				33	NEK4		-BCG1:X2/c14		
				34	NEK4				
				35	NEK4				
				36	NEK4		-BCG1:X2/c20		
		-BCG1:X2/c12		37	NEK4		-XLP2:2		
				38	NEK4				
				39	NEK4				
		-QAB:31		40	NEK4		-BCG1:X2/a14		
				41	NEK4		-BCG1:X2/a12		
				42	NEK4		-QAB:41		
		-PFV1:COM		43	NEK4		-REL1:E1		

☆ 柜间小母线,随柜提供

△ 柜间控制电路(由客户自备)

短接排

✕ 分隔板

(测试短接片

O 其他

DRAWN	XINYU LIU
CHECKED	Jianjun-Wang
APPROVED	Yongsheng.Li
FIRST DATE	2025/4/28
REV. DATE	
REV.	
DESCRIPTION	

TITLE: 端子图表 ==A01=FM2+-X3

CONTRACT NO.: 504485024

FUNCTION: 线路备用柜(采用线路保护)

PROJECT: 天津渤化永利丁辛醇项目

=	FM2
SCALE	1:1
SHEET NO	3
TOTAL PAGES	12
DRAWING NO	XZS1-48353-A01-FM2-T

REV.	DESCRIPTION	REV. DATE

This drawing and information contained thereon is the property of ABB (XIAMEN) Switchgear CO. LTD. and shall not be used, reproduced for any purpose ,or shown to third parties without the written consent of ABB (XIAMEN) Switchgear CO. LTD.

==A01=FM2+-X4

备注	外引电缆	设备	线号	端子号	型号	线号	设备	外引电缆	备注
		-BCT1:1S1		1	NEK6S		-PGW:1		
		-BCT1:1S2		● 2	NEK6S		-BCG1:X6/b5		
		-BCT2:1S1		3	NEK6S		-PMM:IB		
		-BCT2:1S2		● 4	NEK6S		-BCG1:X6/b6		
		-BCT3:1S1		5	NEK6S		-PGW:7		
		-BCT3:1S2		● 6	NEK6S		-BCG1:X6/b7		
		-GND		● 7	NEK6S				
		-BCT1:2S1		8	NEK6S		-BCG1:X6/a1		
		-BCT1:2S2		● 9	NEK6S		-BCG1:X6/b1		
		-BCT2:2S1		10	NEK6S		-BCG1:X6/a2		
		-BCT2:2S2		● 11	NEK6S		-BCG1:X6/b2		
		-BCT3:2S1		12	NEK6S		-BCG1:X6/a3		
		-BCT3:2S2		● 13	NEK6S		-BCG1:X6/b3		
		-GND		● 14	NEK6S				
		-BCN:S1		15	NEK6S		-BCG1:X6/a4		
		-BCN:S2		● 16	NEK6S		-综合选线装置	△	
		-GND		● 17	NEK6S				
		-PGW:3		18	NEK6S		-PMM:IA		
		-PGW:9		19	NEK6S		-PMM:IC		
		-BCG1:X6/b4		20	NEK6S		-综合选线装置	△	
				21	NEK6S				
				22	NEK6S				
				23	NEK6S				

☆ 柜间小母线,随柜提供

△ 柜间控制电路(由客户自备)

短接排

✕ 分隔板

(测试短接片

O 其他

REV.	DESCRIPTION	REV. DATE	
			DRAWN XINYU LIU
			CHECKED Jianjun-Wang
			APPROVED Yongsheng.Li
			FIRST DATE 2025/4/28

TITLE 端子图表 ==A01=FM2+-X4

CONTRACT NO.: 504485024

FUNCTION 线路备用柜(采用线路保护)

PROJECT 天津渤化永利丁辛醇项目

= FM2

SCALE 1:1

SHEET NO 4

TOTAL PAGES 12

DRAWING NO XZS1-48353-A01-FM2-T

REV.	DESCRIPTION	REV. DATE

This drawing and information contained thereon is the property of ABB (XIAMEN) Switchgear CO. LTD. and shall not be used, reproduced for any purpose ,or shown to third parties without the written consent of ABB (XIAMEN) Switchgear CO. LTD.

==A01=FM2+-X5

备注	外引电缆	设备	线号	端子号	型号	线号	设备	外引电缆	备注
				1	NEK4		-KFC1:14		
				2	NEK4		-KFC1:11		
				3	NEK4		-QAB:9		
				4	NEK4		-QAB:19		
				5	NEK4		-QAB:28		
				6	NEK4		-QAB:38		
				7	NEK4		-QAB:29		
				8	NEK4		-QAB:39		
				9	NEK4		-QAB:27		
				10	NEK4		-QAB:37		
				11	NEK4		-QAB:2		
				12	NEK4		-QAB:3		
				13	NEK4		-QAB:13		
				14	NEK4		-QAB:6		
				15	NEK4		-QAB:16		
				16	NEK4		-QAB:7		
				17	NEK4		-QAB:17		
				18	NEK4		-QAB:23		
				19	NEK4		-QAB:33		
				20	NEK4		-QAB:55		
				21	NEK4		-QAB:56		
				22	NEK4		-QAB:48		
				23	NEK4		-QAB:12		
				24	NEK4		-QAB:47		
				25	NEK4		-QAB:57		
				26	NEK4		-QAB:58		
				27	NEK4		-QCE:BGE2/44		
				28	NEK4		-QCE:BGE2/45		
				29	NEK4		-QCE:BGE2/46		
				30	NEK4		-QCE:BGE2/47		
				31	NEK4		-QCE:BGE3/24		
				32	NEK4		-QCE:BGE3/25		
				33	NEK4		-QCE:BGE3/26		
				34	NEK4		-QCE:BGE3/27		
				35	NEK4		-SFS32:5		
				36	NEK4		-SFS32:6		
				37	NEK4		-SFS32:7		
				38	NEK4		-SFS32:8		
				39	NEK4		-FCM20:11		
				40	NEK4		-FCM20:12		
				41	NEK4		-SAM:P1/03		
				42	NEK4		-SAM:P1/04		
				43	NEK4		-BCG1:X2/c26		
				44	NEK4		-BCG1:X2/a26		
				45	NEK4		-BCG1:X2/c28		
				46	NEK4		-BCG1:X2/c32		
				47	NEK4		-BCG1:X2/c30		
				48	NEK4		-BCG1:X1/a22		
				49	NEK4		-BCG1:X1/a20		
				50	NEK4		-BCG1:X1/a18		
	△	-至邻柜继保BI		51	NEK4		-BCG1:X1/a14		
	△	-至邻柜继保BI		52	NEK4		-BCG1:X1/a16		
				53	NEK4		-BR20:4		
				54	NEK4		-BR25:V+		

☆ 柜间小母线,随柜提供

△ 柜间控制电路(由客户自备)

短接排

× 分隔板

(测试短接片

O 其他

DRAWN	XINYU LIU	TITLE
CHECKED	Jianjun-Wang	端子图表 ==A01=FM2+-X5
APPROVED	Yongsheng.Li	CONTRACT NO.:
FIRST DATE	2025/4/28	504485024
REV. DATE		
REV.	DESCRIPTION	

FUNCTION: 线路备用柜(采用线路保护)

PROJECT: 天津渤化永利丁辛醇项目

=	FM2	SHEET NO.	5
SCALE	1:1	TOTAL PAGES	12
DRAWING NO.	XZS1-48353-A01-FM2-T		

==A01=FM2+-X5

备注	外引电缆	设备	线号	型号	端子号	线号	设备	外引电缆	备注
		-BR20:5		NEK4	55				
		-BR25:V-		NEK4	56				
				NEK4	57				
				NEK4	58				
				NEK4	59				
				NEK4	60				
				NEK4	61				
				NEK4	62				
				NEK4	63				
				NEK4	64				
				NEK4	65				
				NEK4	66				

☆ 柜间小母线,厢柜提供
△ 柜间控制电路(由客户自备)
●—● 短接排
✕ 分隔板
(测试短接片
o 其他

This drawing and information contained thereon is the property of ABB (XIAMEN) Switchgear CO. LTD. and shall not be used, reproduced for any purpose ,or shown to third parties without the written consent of ABB (XIAMEN) Switchgear CO.LTD.

REV.	DESCRIPTION	REV. DATE

DRAWN	XINYU LIU	TITLE	端子图表 ==A01=FM2+-X5
CHECKED	Jianjun-Wang		
APPROVED	Yongsheng.Li	CONTRACT NO.:	504485024
FIRST DATE	2025/4/28		

FUNCTION: 线路备用柜(采用线路保护)

PROJECT: 天津渤化永利丁辛醇项目

= FM2 | SHEET NO 5.a
SCALE 1:1 | TOTAL PAGES 12
DRAWING NO XZS1-48353-A01-FM2-T

REV.	DESCRIPTION	REV. DATE

This drawing and information contained thereon is the property of ABB (XIAMEN) Switchgear CO. LTD. and shall not be used, reproduced for any purpose ,or shown to third parties without the written consent of ABB (XIAMEN) Switchgear CO. LTD.

==A01=FM2+-X6

备注	外引电缆	设备	线号	端子号	型号	线号	设备	外引电缆	备注
		-FCM65:2		1	NEK4		-BCG1:X6/a8		
		-FCM65:4		2	NEK4		-BCG1:X6/a9		
		-FCM65:6		3	NEK4		-BCG1:X6/a10		
		-X13:4		4	NEK4		-BCG1:X6/b8		
		-FCM66:2		5	NEK4		-PMM:UA		
				6	NEK4		-PGW:2		
		-FCM66:4		7	NEK4		-PMM:UB		
				8	NEK4		-PGW:5		
		-FCM66:6		9	NEK4		-PMM:UC		
				10	NEK4		-PGW:8		
		-X13:10		11	NEK4		-PMM:UN		

☆ 柜间小母线,随柜提供

△ 柜间控制电路(由客户自备)

短接排

分隔板

(测试短接片

O 其他

REV.	DESCRIPTION	REV. DATE

DRAWN	XINYU LIU	TITLE
CHECKED	Jianjun-Wang	端子图表 ==A01=FM2+-X6
APPROVED	YongshengLi	CONTRACT NO.:
FIRST DATE	2025/4/28	504485024

FUNCTION 线路备用柜(采用线路保护)

PROJECT 天津渤化永利丁辛醇项目

=	FM2	SHEET NO	6
SCALE	1:1	TOTAL PAGES	12
DRAWING NO	XZS1-48353-A01-FM2-T		

REV.	DESCRIPTION	REV. DATE

This drawing and information contained thereon is the property of ABB (XIAMEN) Switchgear CO. LTD. and shall not be used, reproduced for any purpose ,or shown to third parties without the written consent of ABB (XIAMEN) Switchgear CO. LTD.

==A01=FM2+-X9

备注	外引电缆	设备	线号	端子号	型号	线号	设备	外引电缆	备注
				● 1	NEK4		-EB2:1		
				● 2	NEK4		-SB2:13		
		-FCM90:2		● 3	NEK4		-BGD1:1		
				● 4	NEK4		-EB2:2		
				● 5	NEK4		-EA2:A2		
		-X11:4		● 6	NEK4		-EA1:A2		
		-SB2:14		- 7	NEK4		-EA2:A1		
		-EA1:A1		8	RCT4SW		-BGD1:2		

☆ 柜间小母线,随柜提供

△ 柜间控制电路(由客户自备)

短接排

✕ 分隔板

(测试短接片

O 其他

REV.	DESCRIPTION	REV. DATE

DRAWN	XINYU LIU	TITLE
CHECKED	Jianjun-Wang	端子图表 ==A01=FM2+-X9
APPROVED	Yongsheng.Li	CONTRACT NO.:
FIRST DATE	2025/4/28	504485024

FUNCTION: 线路备用柜(采用线路保护)

PROJECT: 天津渤化永利丁辛醇项目

=	FM2	SHEET NO	7
SCALE	1:1	TOTAL PAGES	12
DRAWING NO	XZS1-48353-A01-FM2-T		

REV.	DESCRIPTION	REV. DATE

This drawing and information contained thereon is the property of ABB (XIAMEN) Switchgear CO. LTD. and shall not be used, reproduced for any purpose ,or shown to third parties without the written consent of ABB (XIAMEN) Switchgear CO. LTD.

==A01=FM2+-X11

备注	外引电缆	设备	线号	端子号	型号	线号	设备	外引电缆	备注
6黑色	☆	-X11.2:1		1	A3C 6		-FCM90:1		
6黑色	☆	-X11.1:1							
6黑色	☆	-X11.2:2		2	A3C 6				
6黑色	☆	-X11.1:2							
6黑色	☆	-X11.2:3		3	A3C 6				
6黑色	☆	-X11.1:3							
6黑色	☆	-X11.2:4		4	A3C 6		-X9:6		
6黑色	☆	-X11.1:4							
6黑色	☆	-X11.2:5		5	A3C 6		-FCM10:3		
6黑色	☆	-X11.1:5							
6黑色	☆	-X11.2:6		6	A3C 6		-FCM10:1		
6黑色	☆	-X11.1:6							
6黑色	☆	-X11.2:7		7	A3C 6		-FCM30:3		
6黑色	☆	-X11.1:7							
6黑色	☆	-X11.2:8		8	A3C 6		-FCM30:1		
6黑色	☆	-X11.1:8							

☆ 柜间小母线,随柜提供

△ 柜间控制电路(由客户自备)

短接排

分隔板

(测试短接片

O 其他

REV.	DESCRIPTION	REV. DATE

DRAWN	XINYU LIU	TITLE
CHECKED	Jianjun-Wang	
APPROVED	Yongsheng.Li	CONTRACT NO.:
FIRST DATE	2025/4/28	504485024

端子图表 ==A01=FM2+-X11

FUNCTION 线路备用柜(采用线路保护)

PROJECT 天津渤化永利丁辛醇项目

=	FM2	SHEET NO. 8
SCALE	1:1	TOTAL PAGES 12
DRAWING NO.	XZS1-48353-A01-FM2-T	

REV.	DESCRIPTION	REV. DATE

This drawing and information contained thereon is the property of ABB (XIAMEN) Switchgear CO. LTD. and shall not be used, reproduced for any purpose ,or shown to third parties without the written consent of ABB (XIAMEN) Switchgear CO. LTD.

==A01=FM2+-X13

备注	外引电缆	设备	线号	端子号	型号	线号	设备	外引电缆	备注
	☆	-X13.1:1(11)		1	A4C 4		-FCM65:1		
	☆	-X13.2:1							
	☆	-X13.1:2(12)		2	A4C 4		-FCM65:3		
	☆	-X13.2:2							
	☆	-X13.1:3(13)		3	A4C 4		-FCM65:5		
	☆	-X13.2:3							
	☆	-X13.1:4(14)		4	A4C 4		-X6:4		
	☆	-X13.2:4							
	☆	-X13.1:5(15)		5	A4C 4				
	☆	-X13.2:5							
	☆	-X13.1:6(16)		6	A4C 4				
	☆	-X13.2:6							
	☆	-X13.3:7(17)		7	A4C 4		-FCM66:1		
	☆	-X13.4:7							
	☆	-X13.3:8(18)		8	A4C 4		-FCM66:3		
	☆	-X13.4:8							
	☆	-X13.3:9(19)		9	A4C 4		-FCM66:5		
	☆	-X13.4:9							
	☆	-X13.3:10(20)		10	A4C 4		-X6:11		
	☆	-X13.4:10							

☆ 柜间小母线,随柜提供

△ 柜间控制电路(由客户自备)

短接排

✕ 分隔板

(测试短接片

O 其他

REV.		
DESCRIPTION		
REV. DATE		
DRAWN	XINYU LIU	TITLE
CHECKED	Jianjun-Wang	端子图表 ==A01=FM2+-X13
APPROVED	Yongsheng.Li	CONTRACT NO.:
FIRST DATE	2025/4/28	504485024

FUNCTION 线路备用柜(采用线路保护)

PROJECT 天津渤化永利丁辛醇项目

=	FM2	SHEET NO	9
SCALE	1:1	TOTAL PAGES	12
DRAWING NO	XZS1-48353-A01-FM2-T		

REV.	DESCRIPTION	REV. DATE

This drawing and information contained thereon is the property of ABB (XIAMEN) Switchgear CO. LTD. and shall not be used, reproduced for any purpose ,or shown to third parties without the written consent of ABB (XIAMEN) Switchgear CO. LTD.

==A01=FM2+-X14

备注	外引电缆	设备	线号	端子号	型号	线号	设备	外引电缆	备注
	☆	-X14:2		1	NEK4		-BR20:10		
	☆	-X14:1		2	NEK4				
	☆	-X14:4		3	NEK4		-BR20:9		
	☆	-X14:3		4	NEK4				
	☆	-X14:6		5	NEK4		-ST1		
	☆	-X14:5		6	NEK4				
	☆	-X14:8		7	NEK4		-PGW:25		
	☆	-X14:7		8	NEK4				
	☆	-X14:10		9	NEK4		-PGW:26		
	☆	-X14:9		10	NEK4				
	☆	-X14:12		11	NEK4		-ST1		
	☆	-X14:11		12	NEK4				
				13	NEK4		-BCG1:X4/1		
				14	NEK4		-BCG1:X4/2		
				15	NEK4		-BCG1:X4/3		
				16	NEK4		-SAM:P1/01		
				17	NEK4		-SAM:P1/02		
				18	NEK4		-PMM:A		
				19	NEK4		-PMM:B		
				20	NEK4		-PMM:S		
				21	NEK4		-BR20:7		
				22	NEK4		-BR25:A		
				23	NEK4		-BR20:6		屏蔽双绞线
				24	NEK4		-BR25:B		

☆ 柜间小母线,随柜提供

△ 柜间控制电路(由客户自备)

短接排

✕ 分隔板

(测试短接片

O 其他

DRAWN	XINYU LIU
CHECKED	Jianjun-Wang
APPROVED	Yongsheng.Li
FIRST DATE	2025/4/28
REV. DATE	
REV.	
DESCRIPTION	

TITLE: 端子图表 ==A01=FM2+-X14

CONTRACT NO.: 504485024

FUNCTION: 线路备用柜(采用线路保护)

PROJECT: 天津渤化永利丁辛醇项目

=	FM2
SCALE	1:1
SHEET NO	10
TOTAL PAGES	12
DRAWING NO	XZS1-48353-A01-FM2-T

单线图

一次设备索引			
设备号	设备名称	数量	物料号
-QAB	真空断路器	1	VD4/P-77
-BCT1	电流互感器	1	CTA-G2K311-0841
-BCT2	电流互感器	1	CTA-G2K311-0841
-BCT3	电流互感器	1	CTA-G2K311-0841
-BAD	电容分压装置	3	DIK-06-B06N1000C-1
-QCE	接地开关	1	ET1-BGE2/3
-FA	避雷器	3	SAS-YH2.5WD-8/18.7
-BCN	零序电流互感器	1	CTZ-GLMZ2150501-A1

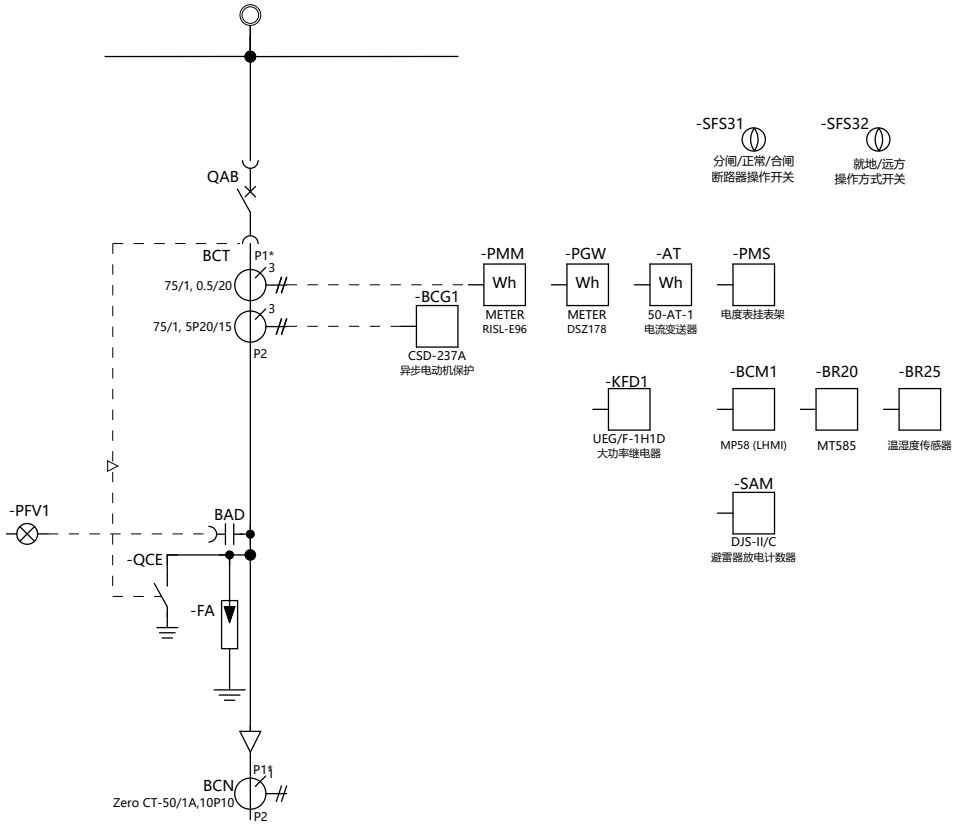

This drawing and information contained thereon is the property of ABB (XIAMEN) Switchgear CO. LTD. and shall not be used, reproduced for any purpose ,or shown to third parties without the written consent of ABB (XIAMEN) Switchgear CO. LTD.

REV.	DESCRIPTION	REV. DATE

DRAWN	XINYU LIU	TITLE	单线图
CHECKED	Jianjun-Wang		
APPROVED	Yongsheng.Li	CONTRACT NO.:	504485024
FIRST DATE	2025/4/28		

FUNCTION: 电机柜(800mm宽柜体)

PROJECT: 天津渤化永利丁辛醇项目

= FM3 | SHEET NO 1 | SCALE 1:1 | TOTAL PAGES 14

DRAWING NO XZS1-48353-A01-FM3-S

断路器弹簧储能电机回路	控制回路	保护与信号回路	加热器回路 电缆室 100W	电缆室照明	低压室照明

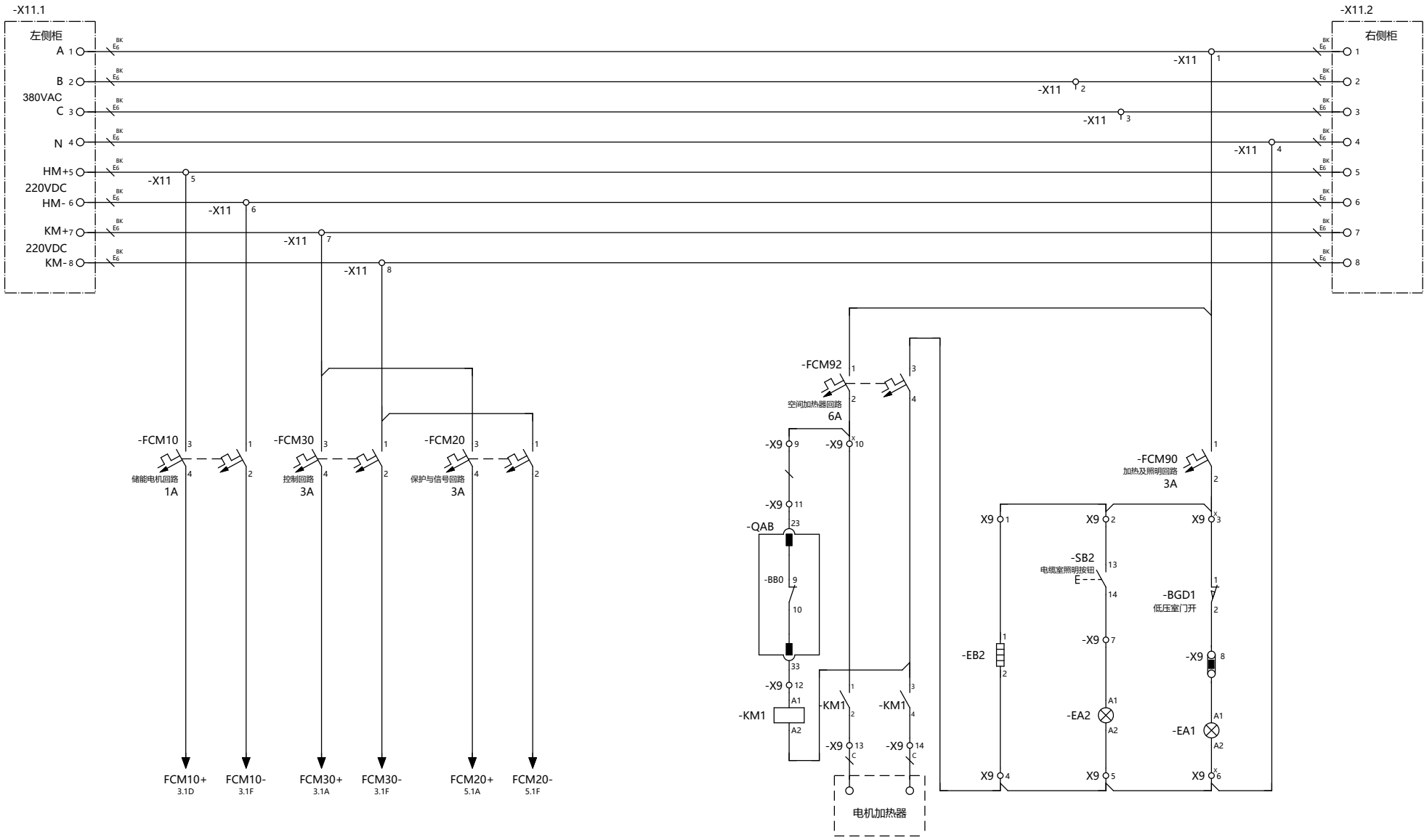

This drawing and information contained thereon is the property of ABB (XIAMEN) Switchgear CO. LTD. and shall not be used, reproduced for any purpose, or shown to third parties without the written consent of ABB (XIAMEN) Switchgear CO. LTD.

REV.	DESCRIPTION	REV. DATE

DRAWN	XINYU LIU	TITLE	电源小母线回路
CHECKED	Jianjun-Wang		
APPROVED	Yongsheng.Li	CONTRACT NO.:	504485024
FIRST DATE	2025/4/28		

FUNCTION: 电机柜(800mm宽柜体)

PROJECT: 天津渤化永利丁辛醇项目

= FM3	SHEET NO 2
SCALE 1:1	TOTAL PAGES 14
DRAWING NO	XZS1-48353-A01-FM3-S

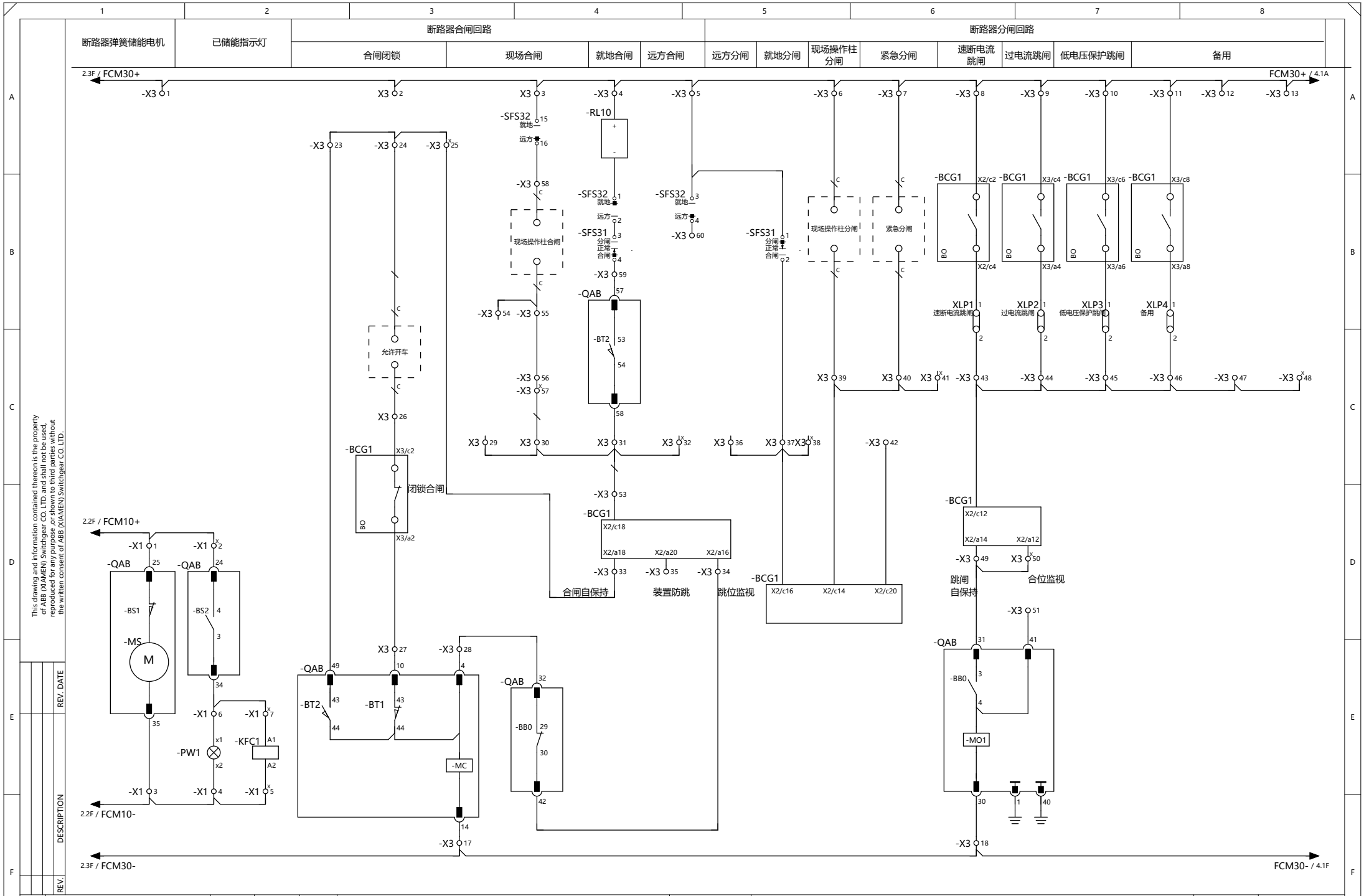

REV.	DESCRIPTION	REV. DATE

DRAWN	XINYU LIU	TITLE	控制回路
CHECKED	Jianjun-Wang		
APPROVED	Yongsheng.Li	CONTRACT NO.:	504485024
FIRST DATE	2025/4/28		

FUNCTION: 电机柜(800mm宽柜体)

PROJECT: 天津渤化永利丁辛醇项目

= FM3	SHEET NO 3
SCALE 1:1	TOTAL PAGES 14
DRAWING NO XZS1-48353-A01-FM3-S	

保护操作电源	带电显示及其闭锁回路

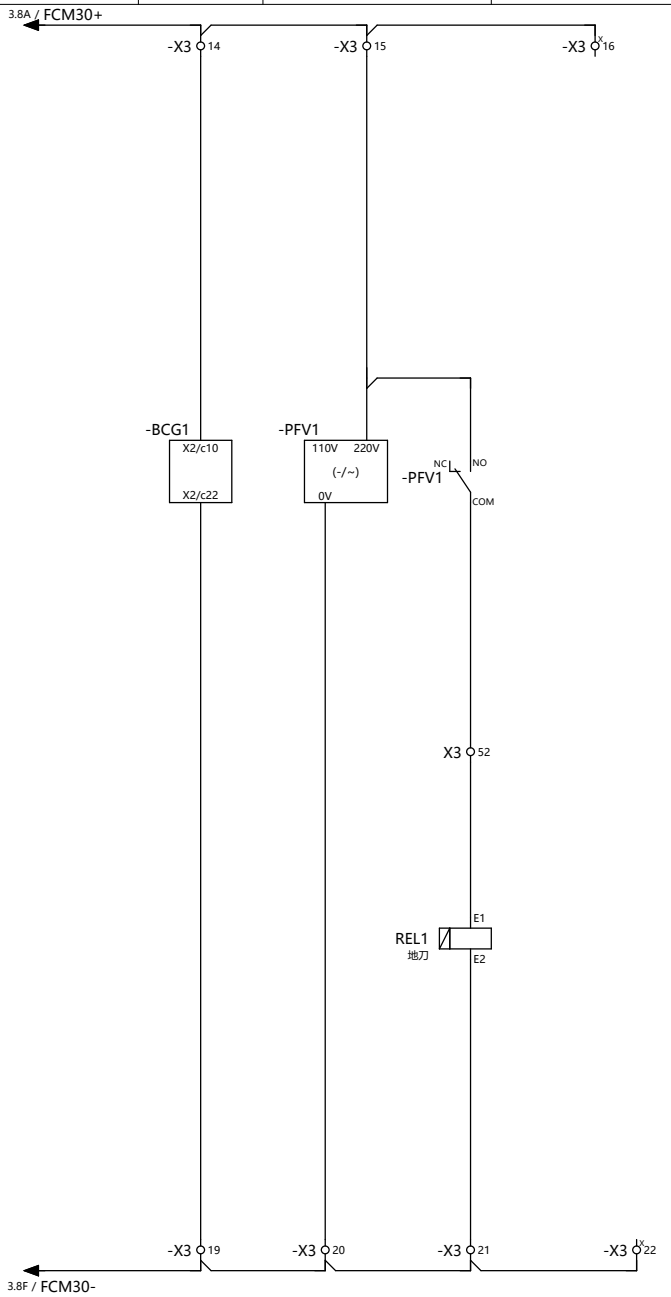

This drawing and information contained thereon is the property of ABB (XIAMEN) Switchgear CO. LTD. and shall not be used, reproduced for any purpose ,or shown to third parties without the written consent of ABB (XIAMEN) Switchgear CO. LTD.

REV.	DESCRIPTION	REV. DATE

DRAWN	XINYU LIU	TITLE	控制回路
CHECKED	Jianjun-Wang		
APPROVED	Yongsheng.Li	CONTRACT NO.:	504485024
FIRST DATE	2025/4/28		

FUNCTION: 电机柜(800mm宽柜体)

PROJECT: 天津渤化永利丁辛醇项目

=	FM3	SHEET NO	4
SCALE	1:1	TOTAL PAGES	14

DRAWING NO: XZS1-48353-A01-FM3-S

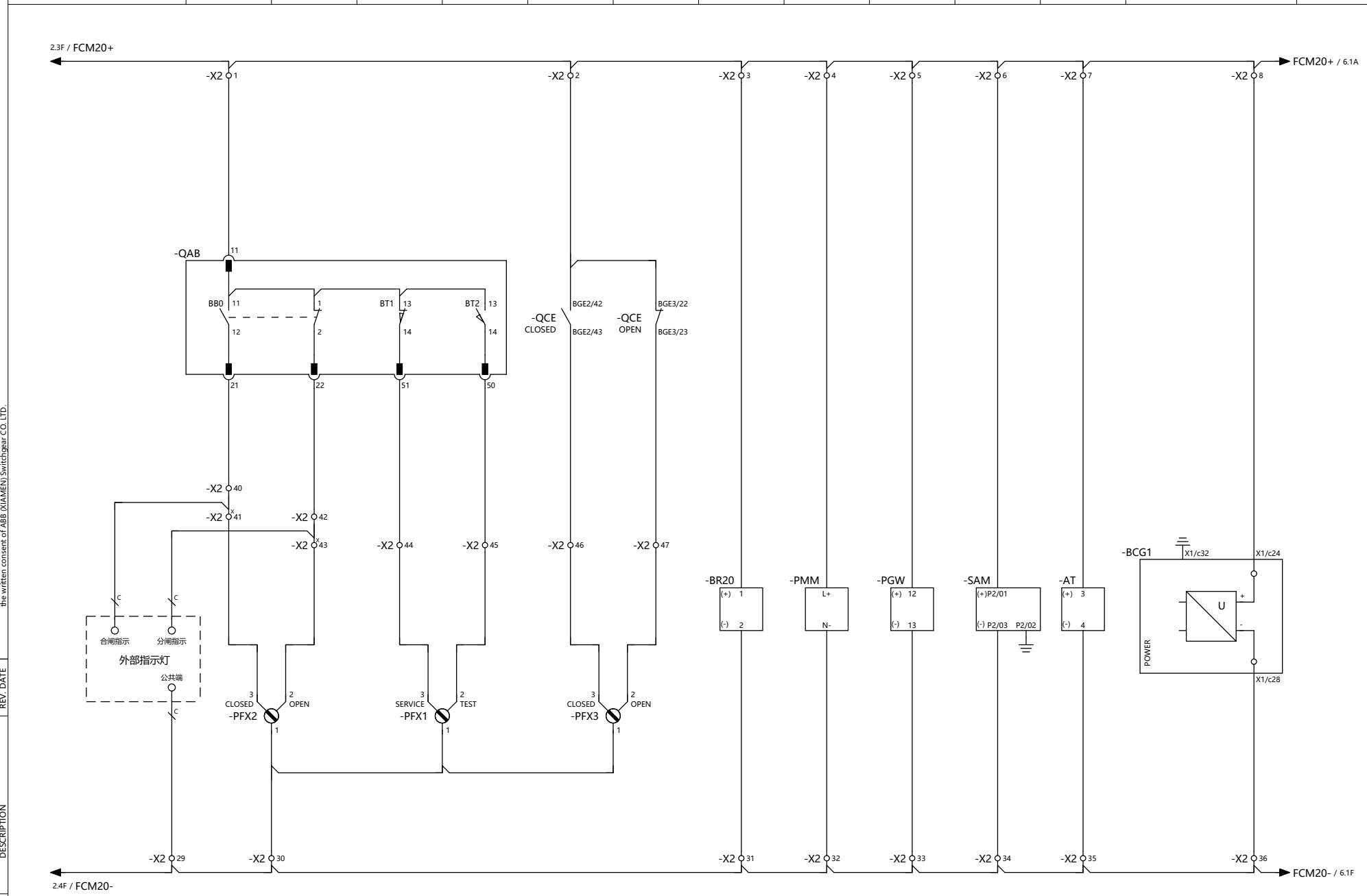

This drawing and information contained thereon is the property of ABB (XIAMEN) Switchgear CO. LTD. and shall not be used, reproduced for any purpose ,or shown to third parties without the written consent of ABB (XIAMEN) Switchgear CO. LTD.

REV.	DESCRIPTION	REV. DATE

DRAWN	XINYU LIU	TITLE	保护与信号回路
CHECKED	Jianjun-Wang		
APPROVED	Yongsheng.Li	CONTRACT NO.:	504485024
FIRST DATE	2025/4/28		

ABB

FUNCTION	电机柜(800mm宽柜体)
PROJECT	天津渤化永利丁辛醇项目

=	FM3	SHEET NO	5
SCALE	1:1	TOTAL PAGES	14
DRAWING NO	XZS1-48353-A01-FM3-S		

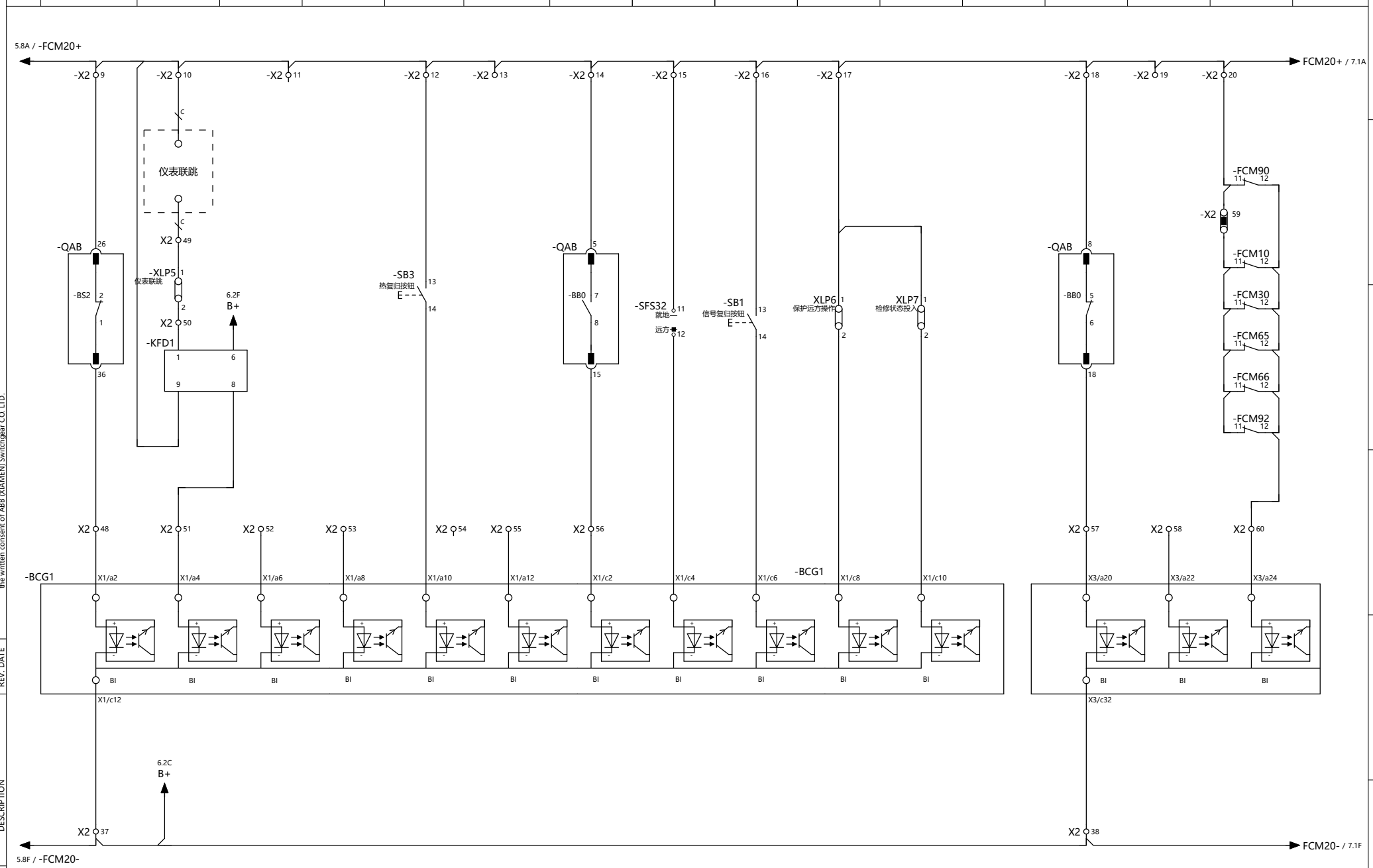

This drawing and information contained thereon is the property of ABB (XIAMEN) Switchgear CO. LTD. and shall not be used, reproduced for any purpose ,or shown to third parties without the written consent of ABB (XIAMEN) Switchgear CO. LTD.

REV.	DESCRIPTION	REV. DATE

DRAWN	XINYU LIU	TITLE	保护与信号回路
CHECKED	Jianjun-Wang		
APPROVED	Yongsheng.Li	CONTRACT NO.:	504485024
FIRST DATE	2025/4/28		

FUNCTION: 电机柜(800mm宽柜体)

PROJECT: 天津渤化永利丁辛醇项目

= FM3 | SHEET NO 6 | SCALE 1:1 | TOTAL PAGES 14

DRAWING NO XZS1-48353-A01-FM3-S

断路器手车位置		接地开关状态		邻柜继保装置故障	备用
工作	试验	合闸	分闸		

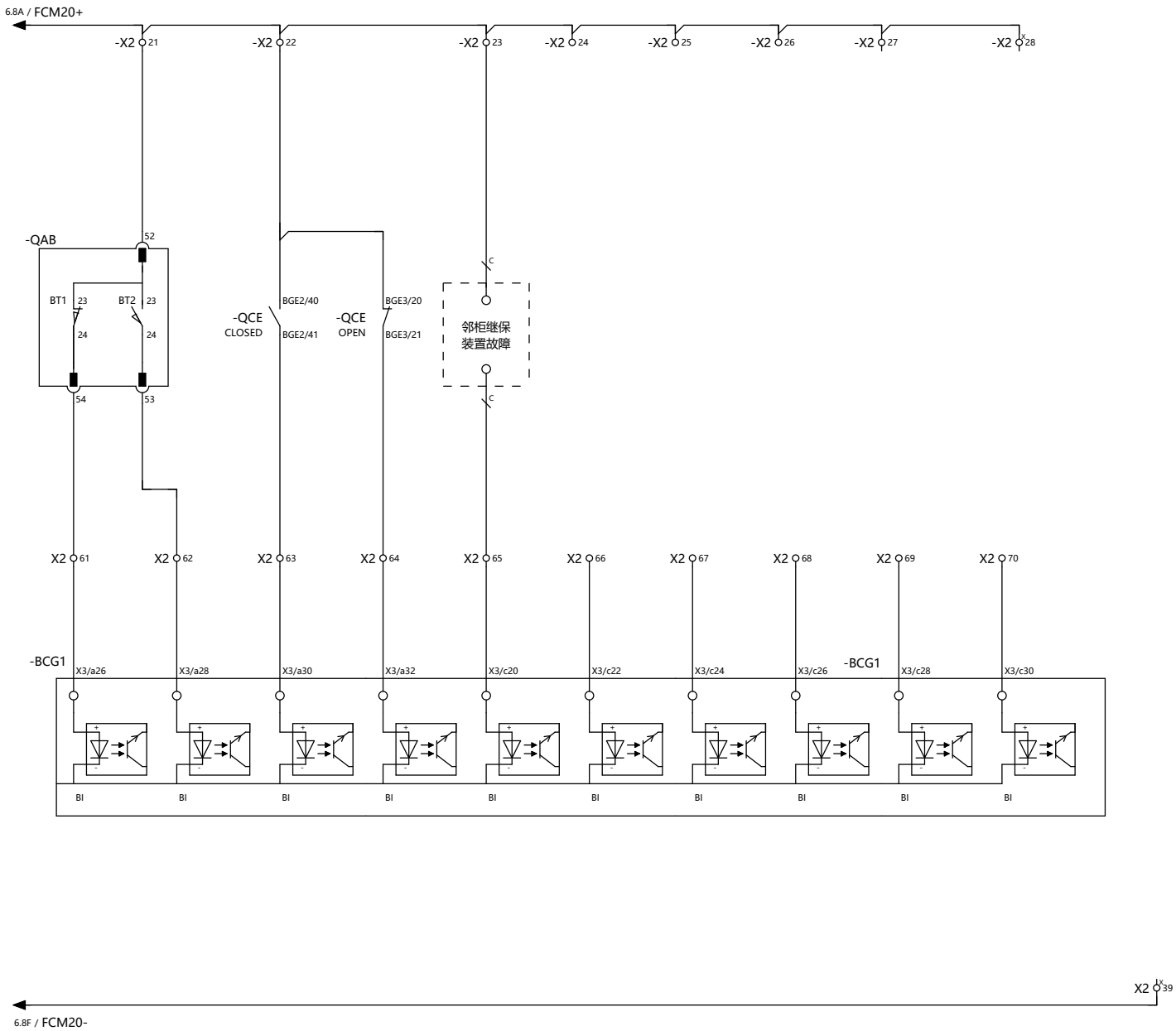

This drawing and information contained thereon is the property of ABB (XIAMEN) Switchgear CO. LTD. and shall not be used, reproduced for any purpose, or shown to third parties without the written consent of ABB (XIAMEN) Switchgear CO. LTD.

REV.	DESCRIPTION	REV. DATE

DRAWN	XINYU LIU	TITLE	保护与信号回路
CHECKED	Jianjun-Wang		
APPROVED	Yongsheng.Li	CONTRACT NO.:	504485024
FIRST DATE	2025/4/28		

FUNCTION: 电机柜(800mm宽柜体)

PROJECT: 天津渤化永利丁辛醇项目

= FM3 | SHEET NO 7 | SCALE 1:1 | TOTAL PAGES 14

DRAWING NO XZS1-48353-A01-FM3-S

断路器已储能	断路器状态		断路器手车位置		接地开关状态		就地/远方选择开关位置		保护空开信号	避雷器计数器报警信号
	合闸	分闸	工作	试验	合闸	分闸	就地	远方		

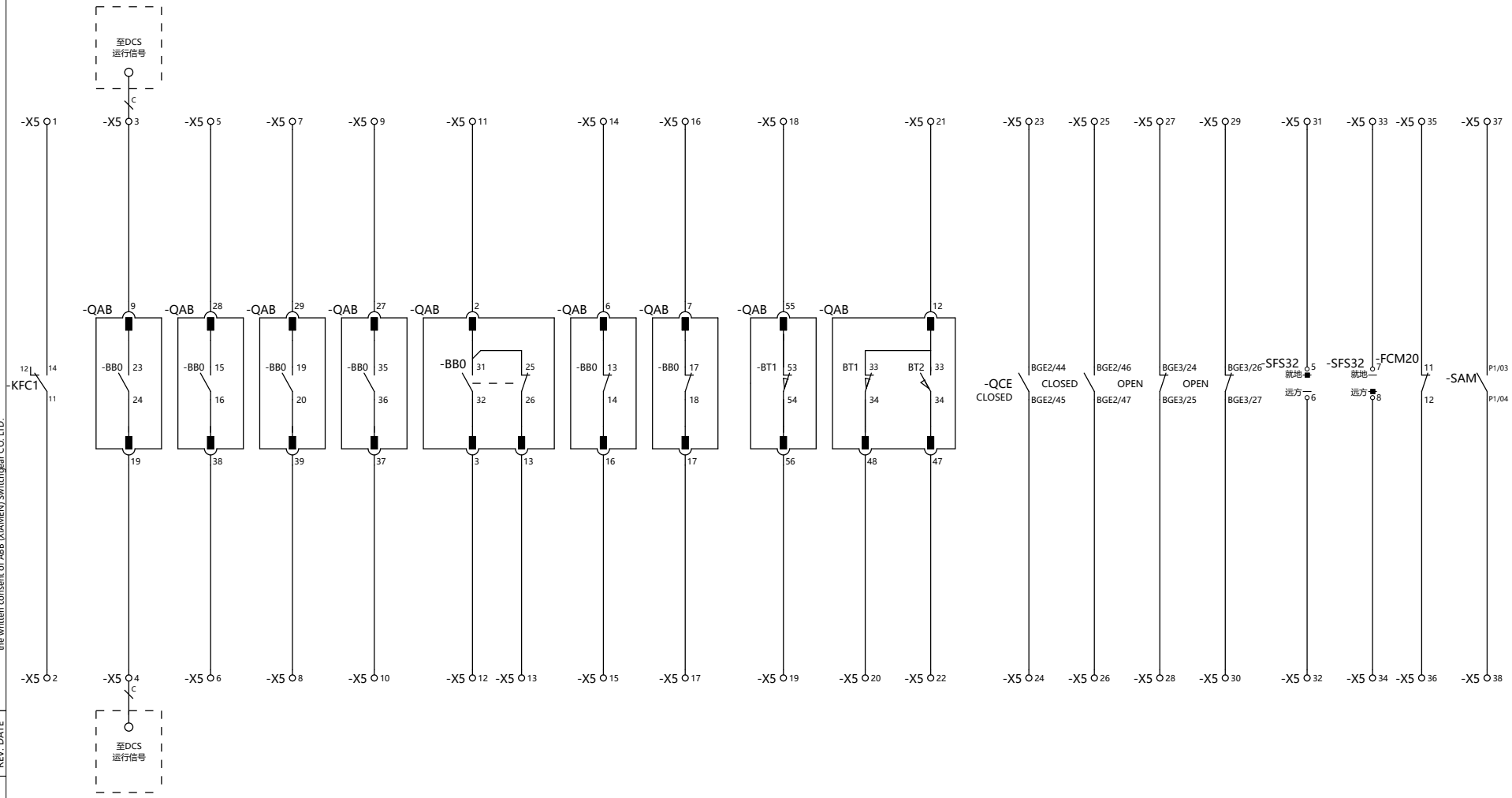

This drawing and information contained thereon is the property of ABB (XIAMEN) Switchgear CO. LTD. and shall not be used, reproduced for any purpose ,or shown to third parties without the written consent of ABB (XIAMEN) Switchgear CO. LTD.

REV.	DESCRIPTION	REV. DATE

DRAWN	XINYU LIU	TITLE	备用回路
CHECKED	Jianjun-Wang		
APPROVED	Yongsheng.Li	CONTRACT NO.:	504485024
FIRST DATE	2025/4/28		

FUNCTION: 电机柜(800mm宽柜体)

PROJECT: 天津渤化永利丁辛醇项目

= FM3	SHEET NO 8
SCALE 1:1	TOTAL PAGES 14
DRAWING NO	XZS1-48353-A01-FM3-S

事故总信号	控制回路断线	备用	非保持信号			远方合闸	远方分闸
			保护动作	运行异常告警	装置故障告警		

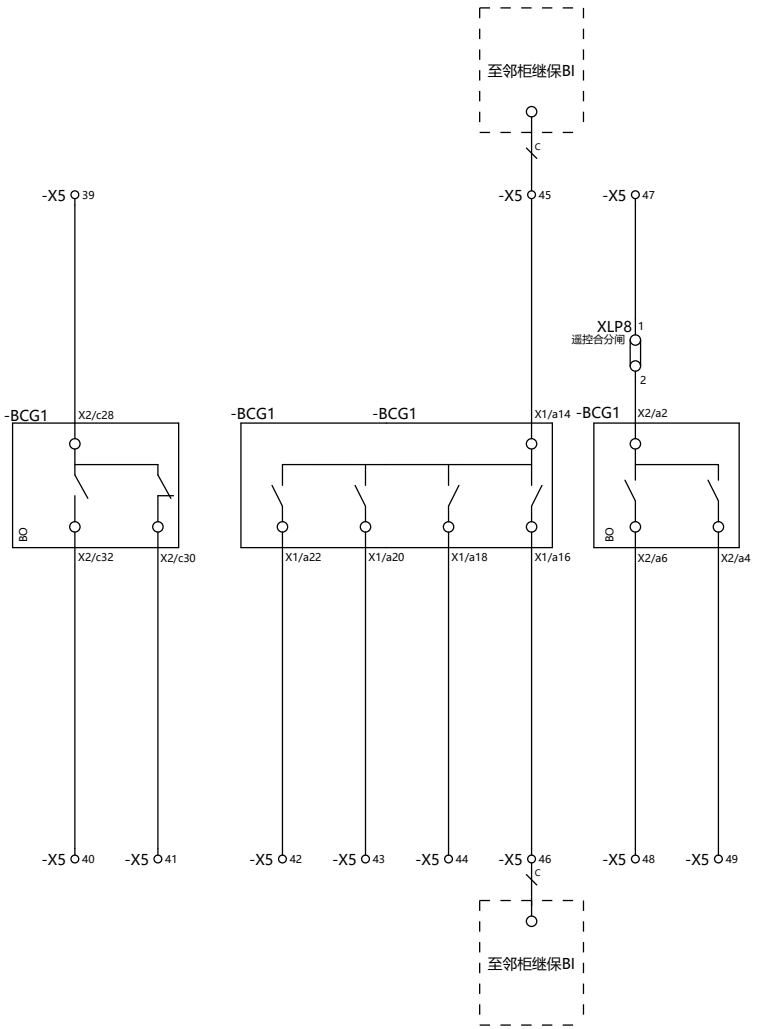

-X5 54 -X5 55 -X5 56 -X5 57 -X5 58

-X5 59 -X5 60 -X5 61 -X5 62 -X5 63

This drawing and information contained thereon is the property of ABB (XIAMEN) Switchgear CO. LTD. and shall not be used, reproduced for any purpose ,or shown to third parties without the written consent of ABB (XIAMEN) Switchgear CO. LTD.

REV.	DESCRIPTION	REV. DATE

DRAWN	XINYU LIU	TITLE	保护备用回路
CHECKED	Jianjun-Wang		
APPROVED	Yongsheng.Li	CONTRACT NO.:	504485024
FIRST DATE	2025/4/28		

FUNCTION: 电机柜(800mm宽柜体)

PROJECT: 天津渤化永利丁辛醇项目

=	FM3	SHEET NO	9
SCALE	1:1	TOTAL PAGES	14

DRAWING NO. XZS1-48353-A01-FM3-S

通讯小母线	保护对时口	避雷器计数器通讯	多功能表485通讯

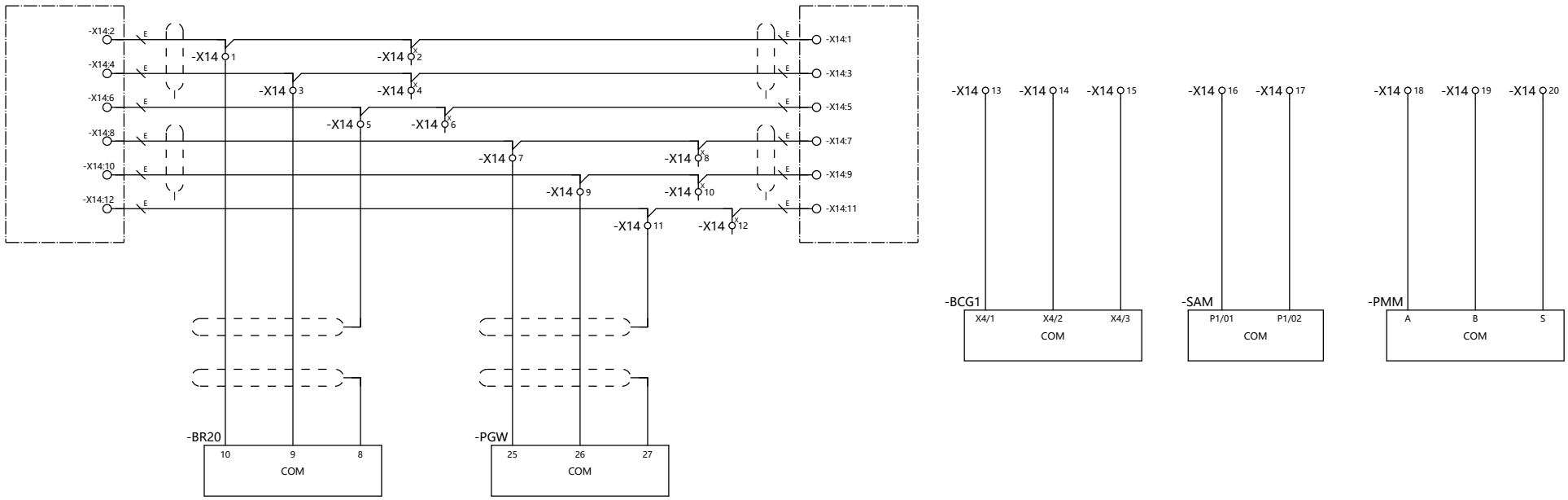

This drawing and information contained thereon is the property of ABB (XIAMEN) Switchgear CO. LTD. and shall not be used, reproduced for any purpose ,or shown to third parties without the written consent of ABB (XIAMEN) Switchgear CO. LTD.

REV.	DESCRIPTION	REV. DATE

DRAWN	XINYU LIU	TITLE	通信回路
CHECKED	Jianjun-Wang		
APPROVED	Yongsheng.Li	CONTRACT NO.:	504485024
FIRST DATE	2025/4/28		

FUNCTION	电机柜(800mm宽柜体)
PROJECT	天津渤化永利丁辛醇项目

=	FM3	SHEET NO	10
SCALE	1:1	TOTAL PAGES	14
DRAWING NO	XZS1-48353-A01-FM3-S		

MT585 24VDC输出	温湿度控制电源	MT585通讯接口 (与MB585通讯接口)	温湿度控制器通讯	HMI 电源及通讯 示意图	电流变送器 4-20mA输出

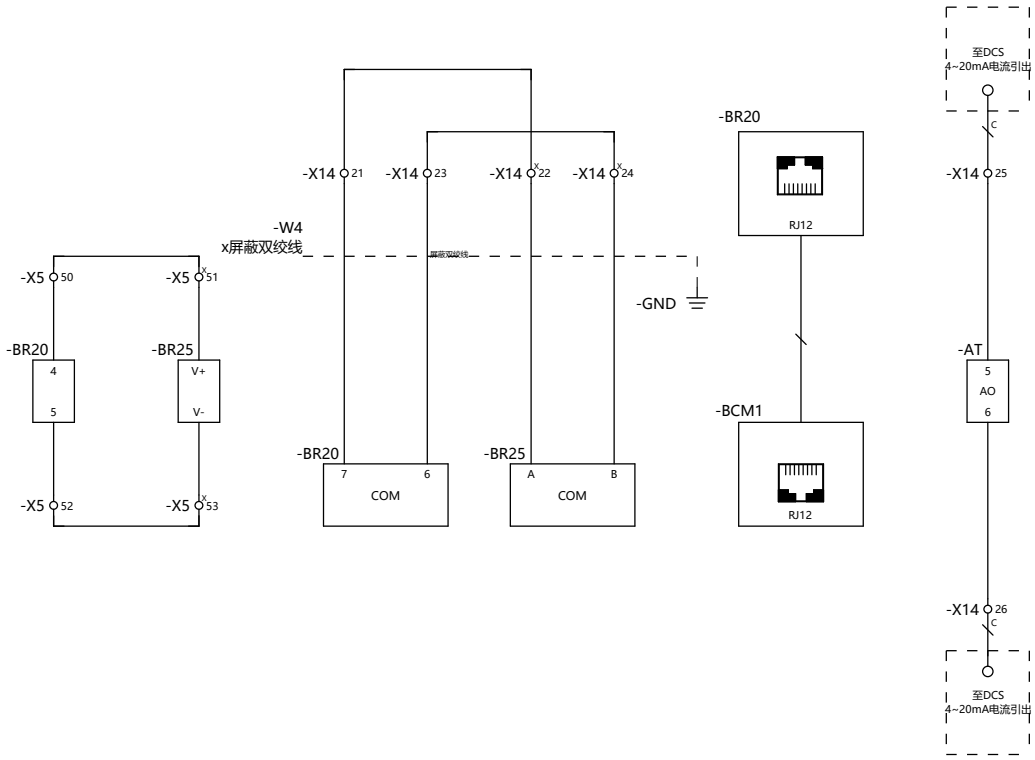

This drawing and information contained thereon is the property of ABB (XIAMEN) Switchgear CO. LTD. and shall not be used, reproduced for any purpose ,or shown to third parties without the written consent of ABB (XIAMEN) Switchgear CO. LTD.

REV.	DESCRIPTION	REV. DATE

DRAWN	XINYU LIU	TITLE	通信回路
CHECKED	Jianjun-Wang		
APPROVED	Yongsheng.Li	CONTRACT NO.:	504485024
FIRST DATE	2025/4/28		

FUNCTION	电机柜(800mm宽柜体)
PROJECT	天津渤化永利丁辛醇项目

=	FM3	SHEET NO	11
SCALE	1:1	TOTAL PAGES	14
DRAWING NO	XZS1-48353-A01-FM3-S		

电压小母线

计量小母线

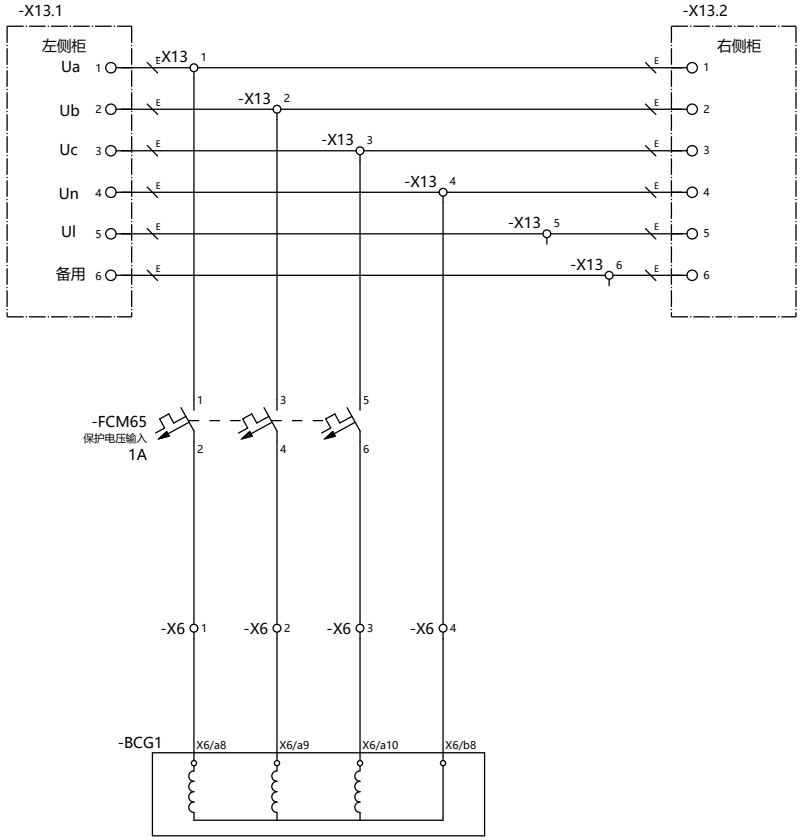

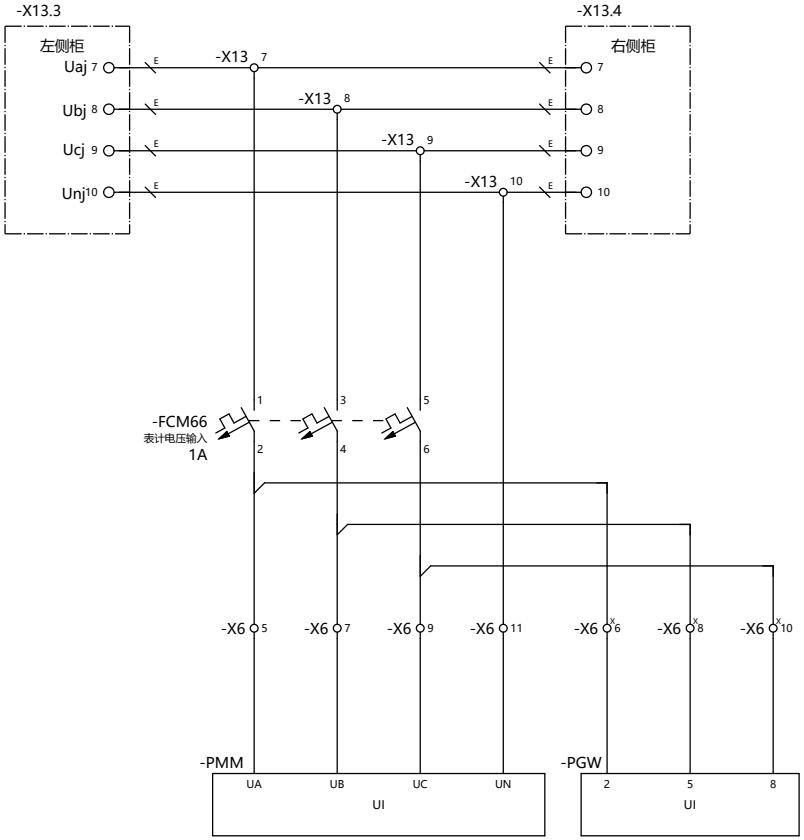

This drawing and information contained thereon is the property of ABB (XIAMEN) Switchgear CO. LTD. and shall not be used, reproduced for any purpose, or shown to third parties without the written consent of ABB (XIAMEN) Switchgear CO. LTD.

REV.	DESCRIPTION	REV. DATE

DRAWN	XINYU LIU	TITLE	电压小母线
CHECKED	Jianjun-Wang		
APPROVED	Yongsheng.Li	CONTRACT NO.:	504485024
FIRST DATE	2025/4/28		

FUNCTION: 电机柜(800mm宽柜体)

PROJECT: 天津渤化永利丁辛醇项目

=	FM3	SHEET NO	12
SCALE	1:1	TOTAL PAGES	14

DRAWING NO: XZS1-48353-A01-FM3-S

This drawing and information contained thereon is the property of ABB (XIAMEN) Switchgear CO. LTD. and shall not be used, reproduced for any purpose ,or shown to third parties without the written consent of ABB (XIAMEN) Switchgear CO. LTD.

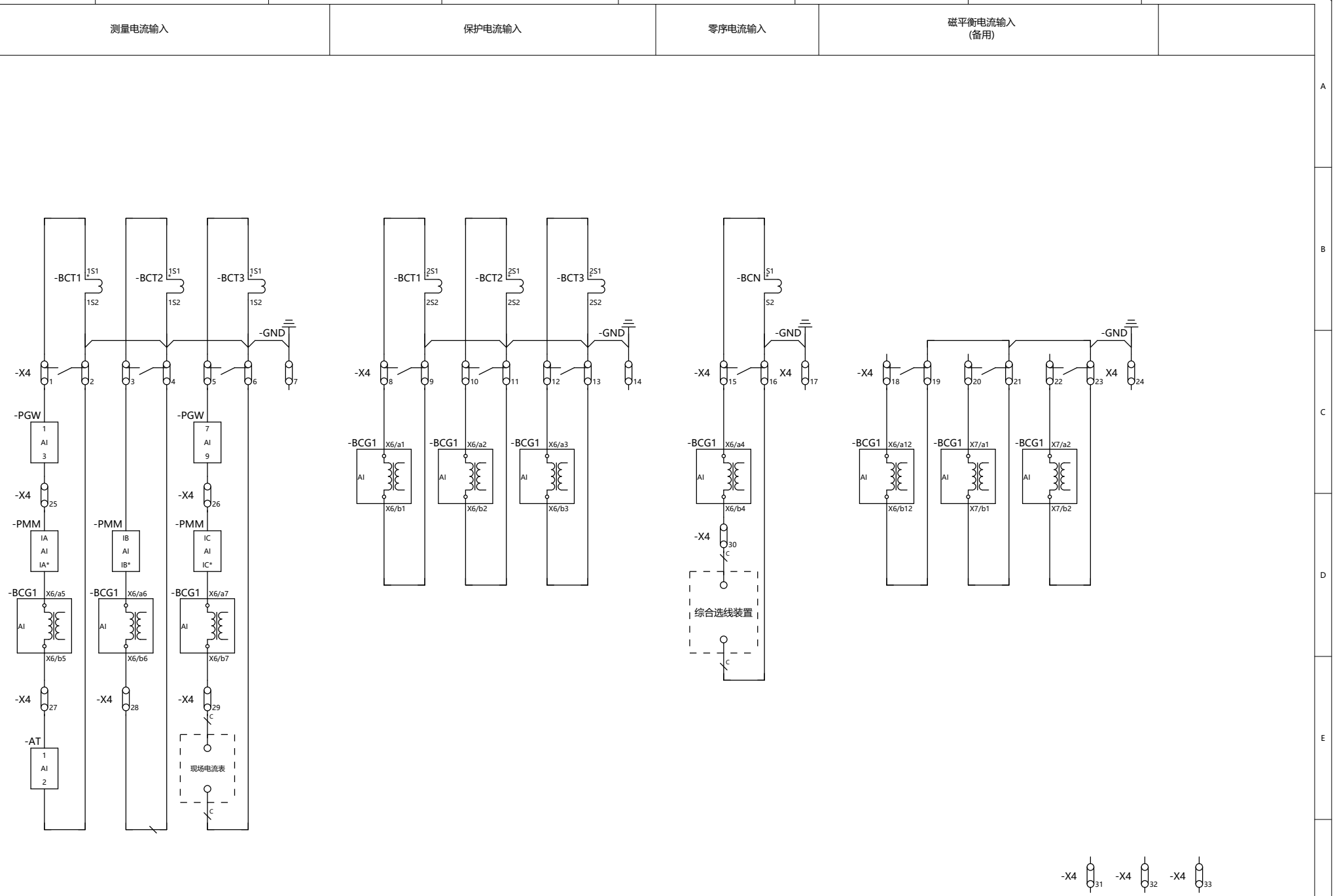

REV.	DESCRIPTION	REV. DATE

DRAWN	XINYU LIU	TITLE	电流回路
CHECKED	Jianjun-Wang		
APPROVED	Yongsheng.Li	CONTRACT NO.:	504485024
FIRST DATE	2025/4/28		

FUNCTION: 电机柜(800mm宽柜体)

PROJECT: 天津渤化永利丁辛醇项目

= FM3	SHEET NO 13
SCALE 1:1	TOTAL PAGES 14
DRAWING NO XZS1-48353-A01-FM3-S	

VD4

-QAB

VD4/P-77

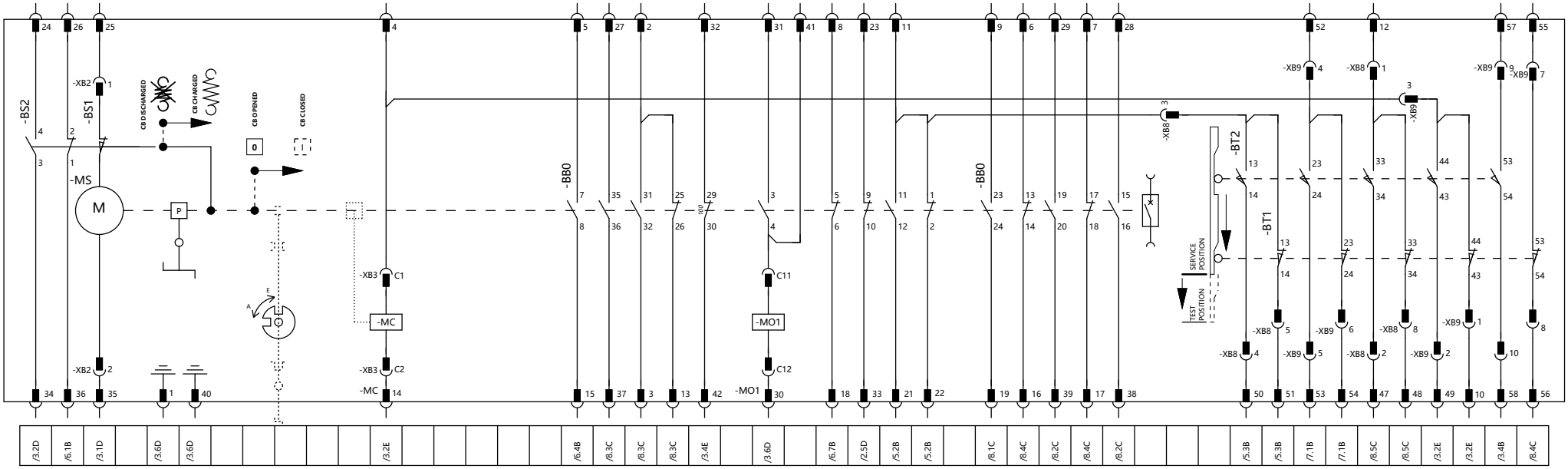

名称	描述	备注
-BS1	储能电机限位开关	
-MS	弹簧操作机构储能电机	
-MC	合闸脱扣器	
-MO1	第一分闸脱扣器	

名称	描述	备注
-BS2	合闸弹簧储能/未储能信号触点	
-BB0	与断路器主轴联动的辅助开关	
-BT1	限位开关(手车位于运行位置)	
-BT2	限位开关(手车位于试验位置)	

接地开关与断路器手车具有可靠的机械闭锁： A)
只有当断路器手车位于试验位置时，才允许操作接地开关 B)
只有当接地开关处于分状态时,断路器手车才允许由试验位置推入运行位置。

电气控制接线图/接点位置参考：
此图所示状态为：断路器手车工作位置 断路器处于分闸状态 操作机构弹簧未储能

This drawing and information contained thereon is the property of ABB (XIAMEN) Switchgear CO. LTD. and shall not be used, reproduced for any purpose, or shown to third parties without the written consent of ABB (XIAMEN) Switchgear CO. LTD.

REV.	DESCRIPTION	REV. DATE

DRAWN	XINYU LIU	TITLE	断路器接线图
CHECKED	Jianjun-Wang		
APPROVED	Yongsheng.Li	CONTRACT NO.:	504485024
FIRST DATE	2025/4/28		

ABB

FUNCTION	电机柜(800mm宽柜体)
PROJECT	天津渤化永利丁辛醇项目

= FM3	SHEET NO 14
SCALE 1:1	TOTAL PAGES 14
DRAWING NO	XZS1-48353-A01-FM3-S

设备清单(柜体)

序号	设备号	设备名称	物料号	数量	制造商	型号	设备参数
1	-BAD	电容分压装置	DIK-06-B06N1000C-1	3	/	B06N-1000C-1	Un=6kV
2	-BCN	零序电流互感器	CTZ-GLMZ2150501-A1	1	ABB	LMZ215-80-120	50/1A,CORE:2VA/10P10,120mm
3	-BCT1	电流互感器	CTA-G2K311-0841	1	ABB	LZZBJ9-12/150b/4	31.5KA/1SEC,75/1A,C1:0.5/20VA;C2:5P20/15VA;
4	-BCT2	电流互感器	CTA-G2K311-0841	1	ABB	LZZBJ9-12/150b/4	31.5KA/1SEC,75/1A,C1:0.5/20VA;C2:5P20/15VA;
5	-BCT3	电流互感器	CTA-G2K311-0841	1	ABB	LZZBJ9-12/150b/4	31.5KA/1SEC,75/1A,C1:0.5/20VA;C2:5P20/15VA;
6	-EA2	LED电缆室照明灯	L-CL10-1C-W-AA-CA	1	PEAKS	CL10-1C-W-AA	AC198-242V
7	-EB2	加热器	EP-HEATER-100W	1	SANYANG	1FZEK833B	100W
8	-FA	避雷器	SAS-YH2.5WD-8/18.7	3	西安神电	YH2.5WD-8/18.7	额定电压:8KV,持续运行电压:6.3KV,雷电冲击残压:18.7KV(8/20us 5kA)
9	-QAB	真空断路器	VD4/P-77	1	ABB	VD4	NEW VD4 P(旋转式辅助开关) WITHOUT RL1 WITH 7NO+7NC WITHOUT MT
10	-QCE	接地开关	ET1-BGE2/3	1	ABB	ET1	ET1 WITH BGE2&BGE3
11	-REL1	闭锁电磁铁	EP-MAGNET	1	PEAKS	EM10-S	/

This drawing and information contained thereon is the property of ABB (XIAMEN) Switchgear CO. LTD. and shall not be used, reproduced for any purpose ,or shown to third parties without the written consent of ABB (XIAMEN) Switchgear CO. LTD.

REV.	DESCRIPTION	REV. DATE

DRAWN	XINYU LIU	TITLE	设备清单(柜体)
CHECKED	Jianjun-Wang		
APPROVED	Yongsheng.Li	CONTRACT NO.:	504485024
FIRST DATE	2025/4/28		

FUNCTION: 电机柜(800mm宽柜体)

PROJECT: 天津渤化永利丁辛醇项目

= FM3 | SHEET NO 1 | SCALE 1:1 | TOTAL PAGES 3

DRAWING NO XZS1-48353-A01-FM3-E

设备清单(低压室面板)

序号	设备号	设备名称	物料号	数量	制造商	型号	设备参数
1	-BCG1	电动机保护	CS-BHYL-05	1	北京四方	CSD-237A-G	装置电源：DC220V;电流输入：1A;电压输入：AC100V;
2	-BCM1	就地显示器	RLY-MP58	1	ABB	MP58 （LHMI）	/
3	-PFV1	强制型带电显示器	VIO-DXN-Q-A10-1	1	LEELEN	DXN-Q	DXN-Q 强制型带电显示器UGZS1 3KV/6KV/10kV，辅助电源：AC/DC 220/110V
4	-PFX1	手车位置指示	PIL-ADWZ25-B/2	1	LEELEN	ADWZ25-B/2	98-242V AC/DC,TRUCK POSITION
5	-PFX2	断路器状态指示	PIL-ADWZ25-K/2	1	LEELEN	ADWZ25-K/2	98-242V AC/DC,CB. STATUS
6	-PFX3	接地开关状态指示	PIL-ADWZ25-E/1	1	LEELEN	ADWZ25-E/1	98-242V AC/DC,EARTHING SWITCH STATUS
7	-PMM	多功能表	CS-BHYL-09	1	川泽电气	RISL-E96-5A-N-N-N-N	装置电源：DC220V ;电流输入：1A;电压输入：AC100V
8	-PW1	白色指示灯	LSA-CL2-520C	1	ABB	CL2-520C	Un=220V DC,WHITE
9	-RL10	五防锁	CS-BHYL-08	1	珠海优特电力科技股份有限公司	DNBS-2J	/
10	-SAM	高灵敏避雷器放电计数器	SAK-DJSII-C-11	1	安徽通辰	DJS-II/C	Un=110~220DC/AC 4.5m;3m
11	-SB1	黑色按钮	PBA-CP1-10B-11	1	ABB	CP1-10B-11	1NO+1NC,不带标牌套
12	-SB2	黑色自锁按钮	PBA-CP2-10B-11	1	ABB	CP2-10B-11	1NO+1NC,不带标牌套
13	-SB3	黑色按钮	PBA-CP1-10B-11	1	ABB	CP1-10B-11	1NO+1NC,不带标牌套
14	-SFS31	选择开关	SSJ-E01-2-401	1	JIANGYIN CHANGJIANG	LW38D-164B0339/2PY-DAN-AX	
15	-SFS32	选择开关	SSJ-E02-4-402	1	JIANGYIN CHANGJIANG	LW38D-164N1257/4P-AX	
16	-XLP1	插拔式压板	T-JY3-2	1	UPUN	JY3-2	驼色
17	-XLP2	插拔式压板	T-JY3-2	1	UPUN	JY3-2	驼色
18	-XLP3	插拔式压板	T-JY3-2	1	UPUN	JY3-2	驼色
19	-XLP4	插拔式压板	T-JY3-2	1	UPUN	JY3-2	驼色
20	-XLP5	插拔式压板	T-JY3-2	1	UPUN	JY3-2	驼色
21	-XLP6	插拔式压板	T-JY3-2	1	UPUN	JY3-2	驼色
22	-XLP7	插拔式压板	T-JY3-2	1	UPUN	JY3-2	驼色
23	-XLP8	插拔式压板	T-JY3-2	1	UPUN	JY3-2	驼色

This drawing and information contained thereon is the property of ABB (XIAMEN) Switchgear CO. LTD. and shall not be used, reproduced for any purpose ,or shown to third parties without the written consent of ABB (XIAMEN) Switchgear CO. LTD.

REV.	DESCRIPTION	REV. DATE

DRAWN	XINYU LIU	TITLE	设备清单(低压室面板)
CHECKED	Jianjun-Wang		
APPROVED	Yongsheng.Li	CONTRACT NO.:	504485024
FIRST DATE	2025/4/28		

FUNCTION: 电机柜(800mm宽柜体)

PROJECT: 天津渤化永利丁辛醇项目

= FM3 | SHEET NO 2 | SCALE 1:1 | TOTAL PAGES 3

DRAWING NO XZS1-48353-A01-FM3-E

设备清单(低压室)

序号	设备号	设备名称	物料号	数量	制造商	型号	设备参数
1	-AT	电流变送器	TDA-50AT1-158O	1	Ribar Electric	50-AT-1	Uaux=220V DC,INPUT:0-1A,OUTPUT:4-20mA
2	-BGD1	微动开关	EP-LVMS	1	PEAKS	TS11-001-01	MECHANICAL LIFE TIME>1000000TIMES
3	-BR20	TEMPERATURE MONITOR	RLY-MT585	1	ABB	MT585	100-240VDC/AC
4	-BR25	Humidity & Temperature Sensor	1YHT010000P0009	1	/	/	/
5	-EA1	LED低压室照明灯	L-CL10-1C-W-AA	1	PEAKS	CL10-1C-W-AA	SUPPLY: AC198~242V; POWER: <4W
6	-FCM10	微型空气开关	MCBA-202M-C1DC;MBDA-S2C-H11R	1;1	ABB	S202M-C1DC;S2C-H11R	Un=440V DC,In=1A,2-POLE
7	-FCM20	微型空气开关	MCBA-202M-C3DC;MBDA-S2C-H11R	1;1	ABB	S202M-C3DC;S2C-H11R	Un=440V DC,In=3A,2-POLE
8	-FCM30	微型空气开关	MCBA-202M-C3DC;MBDA-S2C-H11R	1;1	ABB	S202M-C3DC;S2C-H11R	Un=440V DC,In=3A,2-POLE
9	-FCM65	微型空气开关	MCBA-2030001R0014;MBDA-S2C-H11R	1;1	ABB	S203-C1;S2C-H11R	Un=400V AC,In=1A,3-POLE
10	-FCM66	微型空气开关	MCBA-2030001R0014;MBDA-S2C-H11R	1;1	ABB	S203-C1;S2C-H11R	Un=400V AC,In=1A,3-POLE
11	-FCM90	微型空气开关	MCBA-2010001R0034;MBDA-S2C-H11R	1;1	ABB	S201-C3;S2C-H11R	Un=230V AC,In=3A,1-POLE
12	-FCM92	微型空气开关	MCBA-2020001R0064;MBDA-S2C-H11R	1;1	ABB	S202-C6;S2C-H11R	Un=400V AC/125V DC,In=6A,2-POLE
13	-KFC1	中间继电器	RLY-CRMX220DC4	1	ABB	CRMX220DC4	CR-MX220DC4,UN=220V DC
14	-KFD1	轨道继电器	CS-504485024-01	1	北京四方	CSN-11	/
15	-KM1		RLY-B6-40-00-02	1	/	B6-40-00	Uaux=220-240V AC,4NO CONTACT
16	-PGW	电能表	CS-BHYL-07	1	Wisdom	DSZ178	装置电源：DC220V;电流输入：1A;电压输入：AC100V
17	-PMS	电度表挂表架	PMM-AUX-01	1	/	270	

This drawing and information contained thereon is the property of ABB (XIAMEN) Switchgear CO. LTD. and shall not be used, reproduced for any purpose ,or shown to third parties without the written consent of ABB (XIAMEN) Switchgear CO. LTD.

REV.	DESCRIPTION	REV. DATE

DRAWN	XINYU LIU	TITLE	设备清单(低压室)
CHECKED	Jianjun-Wang		
APPROVED	Yongsheng.Li	CONTRACT NO.:	504485024
FIRST DATE	2025/4/28		

FUNCTION: 电机柜(800mm宽柜体)

PROJECT: 天津渤化永利丁辛醇项目

= FM3 | SHEET NO 3 | SCALE 1:1 | TOTAL PAGES 3

DRAWING NO XZS1-48353-A01-FM3-E

REV.	DESCRIPTION	REV. DATE

This drawing and information contained thereon is the property of ABB (XIAMEN) Switchgear CO. LTD. and shall not be used, reproduced for any purpose ,or shown to third parties without the written consent of ABB (XIAMEN) Switchgear CO. LTD.

==A01=FM3+-X1

备注	外引电缆	设备	线号	端子号	型号	线号	设备	外引电缆	备注
		-FCM10:4		1	NEK4		-QAB:25		
				2	NEK4		-QAB:24		
		-FCM10:2		3	NEK4		-QAB:35		
				4	NEK4		-PW1:x2		
				5	NEK4		-KFC1:A2		
		-QAB:34		6	NEK4		-PW1:x1		
				7	NEK4		-KFC1:A1		

☆ 柜间小母线,随柜提供

△ 柜间控制电路(由客户自备)

短接排

分隔板

(测试短接片

O 其他

REV.	DRAWN	XINYU LIU
DESCRIPTION	CHECKED	Jianjun-Wang
REV. DATE	APPROVED	Yongsheng.Li
	FIRST DATE	2025/4/28

TITLE: 端子图表 ==A01=FM3+-X1

CONTRACT NO.: 504485024

FUNCTION: 电机柜(800mm宽柜体)

PROJECT: 天津渤化永利丁辛醇项目

=	FM3	SHEET NO. 1
SCALE	1:1	TOTAL PAGES 13
DRAWING NO.	XZS1-48353-A01-FM3-T	

REV.	DESCRIPTION	REV. DATE

This drawing and information contained thereon is the property of ABB (XIAMEN) Switchgear CO. LTD. and shall not be used, reproduced for any purpose ,or shown to third parties without the written consent of ABB (XIAMEN) Switchgear CO. LTD.

==A01=FM3+-X2

备注	外引电缆	设备	线号	端子号	型号	线号	设备	外引电缆	备注
		-FCM20:4		● 1	NEK4		-QAB:11		
				● 2	NEK4		-QCE:BGE2/42		
				● 3	NEK4		-BR20:1		
				● 4	NEK4		-PMM:L+		
				● 5	NEK4		-PGW:12		
				● 6	NEK4		-SAM:P2/01		
				● 7	NEK4		-AT:3		
				● 8	NEK4		-BCG1:X1/c24		
				● 9	NEK4		-QAB:26		
	△	-仪表联跳		● 10	NEK4		-KFD1:9		
				● 11	NEK4				
				● 12	NEK4		-SB3:13		
				● 13	NEK4				
				● 14	NEK4		-QAB:5		
				● 15	NEK4		-SFS32:11		
				● 16	NEK4		-SB1:13		
				● 17	NEK4		-XLP6:1		
				● 18	NEK4		-QAB:8		
				● 19	NEK4				
				● 20	NEK4		-FCM90:11		
				● 21	NEK4		-QAB:52		
				● 22	NEK4		-QCE:BGE2/40		
	△	-邻柜继保装置故障		● 23	NEK4				
				● 24	NEK4				
				● 25	NEK4				
				● 26	NEK4				
				● 27	NEK4				
				● 28	NEK4				
	△	-外部指示灯-公共端		● 29	NEK4		-FCM20:2		
				● 30	NEK4		-PFX2:1		
				● 31	NEK4		-BR20:2		
				● 32	NEK4		-PMM:N-		
				● 33	NEK4		-PGW:13		
				● 34	NEK4		-SAM:P2/03		
				● 35	NEK4		-AT:4		
				● 36	NEK4		-BCG1:X1/c28		
		-KFD1:6		● 37	NEK4		-BCG1:X1/c12		
				● 38	NEK4		-BCG1:X3/c32		
				● 39	NEK4				
				● 40	NEK4		-QAB:21		
	△	-外部指示灯-合闸指示		● 41	NEK4		-PFX2:3		
				● 42	NEK4		-QAB:22		
	△	-外部指示灯-分闸指示		● 43	NEK4		-PFX2:2		
		-QAB:51		44	NEK4		-PFX1:3		
		-QAB:50		45	NEK4		-PFX1:2		
		-QCE:BGE2/43		46	NEK4		-PFX3:3		
		-QCE:BGE3/23		47	NEK4		-PFX3:2		
		-QAB:36		48	NEK4		-BCG1:X1/a2		
	△	-仪表联跳		49	NEK4		-XLP5:1		
		-XLP5:2		50	NEK4		-KFD1:1		
		-KFD1:8		51	NEK4		-BCG1:X1/a4		
				52	NEK4		-BCG1:X1/a6		
				53	NEK4		-BCG1:X1/a8		
				54	NEK4				

☆ 柜间小母线,随柜提供

△ 柜间控制电路(由客户自备)

短接排

✕ 分隔板

(测试短接片

O 其他

DRAWN	XINYU LIU	TITLE
CHECKED	Jianjun-Wang	端子图表 ==A01=FM3+-X2
APPROVED	Yongsheng.Li	CONTRACT NO.:
FIRST DATE	2025/4/28	504485024
REV. DATE		
DESCRIPTION		
REV.		

FUNCTION: 电机柜(800mm宽柜体)

PROJECT: 天津渤化永利丁辛醇项目

=	FM3	SHEET NO.	2
SCALE	1:1	TOTAL PAGES	13
DRAWING NO.	XZS1-48353-A01-FM3-T		

REV.	DESCRIPTION	REV. DATE

This drawing and information contained thereon is the property of ABB (XIAMEN) Switchgear CO. LTD. and shall not be used, reproduced for any purpose ,or shown to third parties without the written consent of ABB (XIAMEN) Switchgear CO. LTD.

==A01=FM3+-X2

备注	外引电缆	设备	线号	端子号	型号	线号	设备	外引电缆	备注
				55	NEK4		-BCG1:X1/a12		
		-QAB:15		56	NEK4		-BCG1:X1/c2		
		-QAB:18		57	NEK4		-BCG1:X3/a20		
				58	NEK4		-BCG1:X3/a22		
		-FCM10:11		59	RCT4SW		-FCM90:11		
		-FCM92:12		60	NEK4		-BCG1:X3/a24		
		-QAB:54		61	NEK4		-BCG1:X3/a26		
		-QAB:53		62	NEK4		-BCG1:X3/a28		
		-QCE:BGE2/41		63	NEK4		-BCG1:X3/a30		
		-QCE:BGE3/21		64	NEK4		-BCG1:X3/a32		
	△	-邻柜继保装置故障		65	NEK4		-BCG1:X3/c20		
				66	NEK4		-BCG1:X3/c22		
				67	NEK4		-BCG1:X3/c24		
				68	NEK4		-BCG1:X3/c26		
				69	NEK4		-BCG1:X3/c28		
				70	NEK4		-BCG1:X3/c30		

☆ 柜间小母线,随柜提供

△ 柜间控制电路(由客户自备)

短接排

✕ 分隔板

(测试短接片

O 其他

DRAWN	XINYU LIU	TITLE
CHECKED	Jianjun-Wang	端子图表 ==A01=FM3+-X2
APPROVED	Yongsheng.Li	CONTRACT NO.:
FIRST DATE	2025/4/28	504485024
REV. DATE		
DESCRIPTION		
REV.		

FUNCTION 电机柜(800mm宽柜体)

PROJECT 天津渤化永利丁辛醇项目

=	FM3	SHEET NO.	2.a
SCALE	1:1	TOTAL PAGES	13
DRAWING NO.	XZS1-48353-A01-FM3-T		

REV.	DESCRIPTION	REV. DATE

This drawing and information contained thereon is the property of ABB (XIAMEN) Switchgear CO. LTD. and shall not be used, reproduced for any purpose ,or shown to third parties without the written consent of ABB (XIAMEN) Switchgear CO. LTD.

==A01=FM3+-X3

备注	外引电缆	设备	线号	端子号	型号	线号	设备	外引电缆	备注
				1	NEK4		-FCM30:4		
				2	NEK4				
				3	NEK4		-SFS32:15		
				4	NEK4		-RL10:+		
				5	NEK4		-SFS32:3		
	△	-现场操作柱分闸		6	NEK4				
	△	-紧急分闸		7	NEK4				
				8	NEK4		-BCG1:X2/c2		
				9	NEK4		-BCG1:X3/c4		
				10	NEK4		-BCG1:X3/c6		
				11	NEK4		-BCG1:X3/c8		
				12	NEK4				
				13	NEK4				
				14	NEK4		-BCG1:X2/c10		
				15	NEK4		-PFV1:220V		
				16	NEK4				
		-FCM30:2		17	NEK4		-QAB:14		
				18	NEK4		-QAB:30		
				19	NEK4		-BCG1:X2/c22		
				20	NEK4		-PFV1:0V		
				21	NEK4		-REL1:E2		
				22	NEK4				
				23	NEK4		-QAB:49		
	△	-允许开车		24	NEK4				
				25	NEK4		-X3:33		
	△	-允许开车		26	NEK4		-BCG1:X3/c2		
		-BCG1:X3/a2		27	NEK4		-QAB:10		
		-QAB:32		28	NEK4		-QAB:4		
				29	NEK4				
				30	NEK4		-X3:57		
		-X3:53		31	NEK4		-QAB:58		
				32	NEK4				
		-X3:25		33	NEK4		-BCG1:X2/a18		
		-QAB:42		34	NEK4		-BCG1:X2/a16		
				35	NEK4		-BCG1:X2/a20		
				36	NEK4				
		-SFS31:2		37	NEK4		-BCG1:X2/c16		
				38	NEK4				
	△	-现场操作柱分闸		39	NEK4		-BCG1:X2/c14		
	△	-紧急分闸		40	NEK4				
				41	NEK4				
				42	NEK4		-BCG1:X2/c20		
		-BCG1:X2/c12		43	NEK4		-XLP1:2		
				44	NEK4		-XLP2:2		
				45	NEK4		-XLP3:2		
				46	NEK4		-XLP4:2		
				47	NEK4				
				48	NEK4				
		-QAB:31		49	NEK4		-BCG1:X2/a14		
				50	NEK4		-BCG1:X2/a12		
				51	NEK4		-QAB:41		
		-PFV1:COM		52	NEK4		-REL1:E1		
		-BCG1:X2/c18		53	NEK4		-X3:31		
				54	NEK4				

☆ 柜间小母线,随柜提供

△ 柜间控制电路(由客户自备)

短接排

✕ 分隔板

(测试短接片

O 其他

DRAWN	XINYU LIU	TITLE
CHECKED	Jianjun-Wang	端子图表 ==A01=FM3+-X3
APPROVED	Yongsheng.Li	CONTRACT NO.: 504485024
FIRST DATE	2025/4/28	
REV. DATE		
REV.		
DESCRIPTION		

FUNCTION: 电机柜(800mm宽柜体)

PROJECT: 天津渤化永利丁辛醇项目

=	FM3	SHEET NO.	3
SCALE	1:1	TOTAL PAGES	13
DRAWING NO.	XZS1-48353-A01-FM3-T		

REV.	DESCRIPTION	REV. DATE

This drawing and information contained thereon is the property of ABB (XIAMEN) Switchgear CO. LTD. and shall not be used, reproduced for any purpose ,or shown to third parties without the written consent of ABB (XIAMEN) Switchgear CO. LTD.

==A01=FM3+-X3

备注	外引电缆	设备	线号	端子号	型号	线号	设备	外引电缆	备注
	△	-现场操作柱合闸		●55	NEK4				
				●56	NEK4				
				●57	NEK4		-X3:30		
	△	-现场操作柱合闸		ı 58	NEK4		-SFS32:16		
		-SFS31:4		ı 59	NEK4		-QAB:57		
				ı 60	NEK4		-SFS32:4		

☆ 柜间小母线,随柜提供

△ 柜间控制电路(由客户自备)

短接排

✕ 分隔板

(测试短接片

O 其他

DRAWN	XINYU LIU	TITLE
CHECKED	Jianjun-Wang	端子图表 ==A01=FM3+-X3
APPROVED	Yongsheng.Li	CONTRACT NO.:
FIRST DATE	2025/4/28	504485024
REV. DATE		
DESCRIPTION		
REV.		

FUNCTION: 电机柜(800mm宽柜体)

PROJECT: 天津渤化永利丁辛醇项目

=	FM3	SHEET NO.	3.a
SCALE	1:1	TOTAL PAGES	13
DRAWING NO.	XZS1-48353-A01-FM3-T		

REV.	DESCRIPTION	REV. DATE

This drawing and information contained thereon is the property of ABB (XIAMEN) Switchgear CO. LTD. and shall not be used, reproduced for any purpose ,or shown to third parties without the written consent of ABB (XIAMEN) Switchgear CO. LTD.

==A01=FM3+-X4

备注	外引电缆	设备	线号	端子号	型号	线号	设备	外引电缆	备注
		-BCT1:1S1		1	NEK6S		-PGW:1		
		-BCT1:1S2		2	NEK6S		-AT:2		
		-BCT2:1S1		3	NEK6S		-PMM:IB		
		-BCT2:1S2		4	NEK6S		-X4:28		
		-BCT3:1S1		5	NEK6S		-PGW:7		
		-BCT3:1S2		6	NEK6S		-现场电流表	△	
		-GND		7	NEK6S				
		-BCT1:2S1		8	NEK6S		-BCG1:X6/a1		
		-BCT1:2S2		9	NEK6S		-BCG1:X6/b1		
		-BCT2:2S1		10	NEK6S		-BCG1:X6/a2		
		-BCT2:2S2		11	NEK6S		-BCG1:X6/b2		
		-BCT3:2S1		12	NEK6S		-BCG1:X6/a3		
		-BCT3:2S2		13	NEK6S		-BCG1:X6/b3		
		-GND		14	NEK6S				
		-BCN:S1		15	NEK6S		-BCG1:X6/a4		
		-BCN:S2		16	NEK6S		-综合选线装置	△	
		-GND		17	NEK6S				
				18	NEK6S		-BCG1:X6/a12		
				19	NEK6S		-BCG1:X6/b12		
				20	NEK6S		-BCG1:X7/a1		
				21	NEK6S		-BCG1:X7/b1		
				22	NEK6S		-BCG1:X7/a2		
				23	NEK6S		-BCG1:X7/b2		
		-GND		24	NEK6S				
		-PGW:3		25	NEK6S		-PMM:IA		
		-PGW:9		26	NEK6S		-PMM:IC		
		-BCG1:X6/b5		27	NEK6S		-AT:1		
		-BCG1:X6/b6		28	NEK6S		-X4:4		
		-BCG1:X6/b7		29	NEK6S		-现场电流表	△	
		-BCG1:X6/b4		30	NEK6S		-综合选线装置	△	
				31	NEK6S				
				32	NEK6S				
				33	NEK6S				

☆ 柜间小母线,随柜提供

△ 柜间控制电路(由客户自备)

短接排

✕ 分隔板

(测试短接片

O 其他

DRAWN	XINYU LIU	TITLE
CHECKED	Jianjun-Wang	
APPROVED	Yongsheng.Li	CONTRACT NO.:
FIRST DATE	2025/4/28	504485024
REV. DATE		
REV.		
DESCRIPTION		

端子图表 ==A01=FM3+-X4

FUNCTION

PROJECT

电机柜(800mm宽柜体)

天津渤化永利丁辛醇项目

=	FM3	SHEET NO. 4
SCALE	1:1	TOTAL PAGES 13
DRAWING NO.	XZS1-48353-A01-FM3-T	

REV.	DESCRIPTION	REV. DATE

This drawing and information contained thereon is the property of ABB (XIAMEN) Switchgear CO. LTD. and shall not be used, reproduced for any purpose ,or shown to third parties without the written consent of ABB (XIAMEN) Switchgear CO. LTD.

==A01=FM3+-X5

备注	外引电缆	设备	线号	端子号	型号	线号	设备	外引电缆	备注
				1	NEK4		-KFC1:14		
				2	NEK4		-KFC1:11		
	△	-至DCS运行信号		3	NEK4		-QAB:9		
	△	-至DCS运行信号		4	NEK4		-QAB:19		
				5	NEK4		-QAB:28		
				6	NEK4		-QAB:38		
				7	NEK4		-QAB:29		
				8	NEK4		-QAB:39		
				9	NEK4		-QAB:27		
				10	NEK4		-QAB:37		
				11	NEK4		-QAB:2		
				12	NEK4		-QAB:3		
				13	NEK4		-QAB:13		
				14	NEK4		-QAB:6		
				15	NEK4		-QAB:16		
				16	NEK4		-QAB:7		
				17	NEK4		-QAB:17		
				18	NEK4		-QAB:55		
				19	NEK4		-QAB:56		
				20	NEK4		-QAB:48		
				21	NEK4		-QAB:12		
				22	NEK4		-QAB:47		
				23	NEK4		-QCE:BGE2/44		
				24	NEK4		-QCE:BGE2/45		
				25	NEK4		-QCE:BGE2/46		
				26	NEK4		-QCE:BGE2/47		
				27	NEK4		-QCE:BGE3/24		
				28	NEK4		-QCE:BGE3/25		
				29	NEK4		-QCE:BGE3/26		
				30	NEK4		-QCE:BGE3/27		
				31	NEK4		-SFS32:5		
				32	NEK4		-SFS32:6		
				33	NEK4		-SFS32:7		
				34	NEK4		-SFS32:8		
				35	NEK4		-FCM20:11		
				36	NEK4		-FCM20:12		
				37	NEK4		-SAM:P1/03		
				38	NEK4		-SAM:P1/04		
				39	NEK4		-BCG1:X2/c28		
				40	NEK4		-BCG1:X2/c32		
				41	NEK4		-BCG1:X2/c30		
				42	NEK4		-BCG1:X1/a22		
				43	NEK4		-BCG1:X1/a20		
				44	NEK4		-BCG1:X1/a18		
	△	-至邻柜继保BI		45	NEK4		-BCG1:X1/a14		
	△	-至邻柜继保BI		46	NEK4		-BCG1:X1/a16		
				47	NEK4		-XLP8:1		
				48	NEK4		-BCG1:X2/a6		
				49	NEK4		-BCG1:X2/a4		
				50	NEK4		-BR20:4		
				51	NEK4		-BR25:V+		
				52	NEK4		-BR20:5		
				53	NEK4		-BR25:V-		
				54	NEK4				

☆ 柜间小母线,随柜提供

△ 柜间控制电路(由客户自备)

短接排

✕ 分隔板

(测试短接片

O 其他

REV.	DESCRIPTION	REV. DATE

DRAWN XINYU LIU
CHECKED Jianjun-Wang
APPROVED Yongsheng.Li
FIRST DATE 2025/4/28

TITLE 端子图表 ==A01=FM3+-X5

CONTRACT NO.: 504485024

FUNCTION 电机柜(800mm宽柜体)

PROJECT 天津渤化永利丁辛醇项目

= FM3
SCALE 1:1
SHEET NO 5
TOTAL PAGES 13
DRAWING NO XZS1-48353-A01-FM3-T

==A01=FM3+-X5

备注	外引电缆	设备	线号	型号	端子号	线号	设备	备注	外引电缆	设备	线号	型号	端子号	线号	设备
				NEK4	1 55							NEK4	1 55		
				NEK4	1 56							NEK4	1 56		
				NEK4	1 57							NEK4	1 57		
				NEK4	1 58							NEK4	1 58		
				NEK4	1 59							NEK4	1 59		
				NEK4	1 60							NEK4	1 60		
				NEK4	1 61							NEK4	1 61		
				NEK4	1 62							NEK4	1 62		
				NEK4	1 63							NEK4	1 63		

☆ 柜间小母线,厢柜提供

△ 柜间控制电路(由客户自备)

短接排

分隔板

测试短接片

其他

This drawing and information contained thereon is the property of ABB (XIAMEN) Switchgear CO. LTD. and shall not be used, reproduced for any purpose ,or shown to third parties without the written consent of ABB (XIAMEN) Switchgear CO. LTD.

REV.	DESCRIPTION	REV. DATE

DRAWN	XINYU LIU	TITLE	端子图表 ==A01=FM3+-X5
CHECKED	Jianjun-Wang		
APPROVED	Yongsheng.Li	CONTRACT NO.:	504485024
FIRST DATE	2025/4/28		

FUNCTION: 电机柜(800mm宽柜体)

PROJECT: 天津渤化永利丁辛醇项目

= FM3 | SHEET NO 5.a

SCALE 1:1 | TOTAL PAGES 13

DRAWING NO XZS1-48353-A01-FM3-T

REV.	DESCRIPTION	REV. DATE

This drawing and information contained thereon is the property of ABB (XIAMEN) Switchgear CO. LTD. and shall not be used, reproduced for any purpose ,or shown to third parties without the written consent of ABB (XIAMEN) Switchgear CO. LTD.

==A01=FM3+-X6

备注	外引电缆	设备	线号	端子号	型号	线号	设备	外引电缆	备注
		-FCM65:2		1	NEK4		-BCG1:X6/a8		
		-FCM65:4		2	NEK4		-BCG1:X6/a9		
		-FCM65:6		3	NEK4		-BCG1:X6/a10		
		-X13:4		4	NEK4		-BCG1:X6/b8		
		-FCM66:2		5	NEK4		-PMM:UA		
				6	NEK4		-PGW:2		
		-FCM66:4		7	NEK4		-PMM:UB		
				8	NEK4		-PGW:5		
		-FCM66:6		9	NEK4		-PMM:UC		
				10	NEK4		-PGW:8		
		-X13:10		11	NEK4		-PMM:UN		

☆ 柜间小母线,随柜提供

△ 柜间控制电路(由客户自备)

短接排

分隔板

(测试短接片

O 其他

REV.		
DESCRIPTION		
REV. DATE		
DRAWN	XINYU LIU	TITLE
CHECKED	Jianjun-Wang	端子图表 ==A01=FM3+-X6
APPROVED	YongshengLi	CONTRACT NO.:
FIRST DATE	2025/4/28	504485024
FUNCTION		电机柜(800mm宽柜体)
PROJECT		天津渤化永利丁辛醇项目
=	FM3	SHEET NO. 6
SCALE	1:1	TOTAL PAGES 13
DRAWING NO.	XZS1-48353-A01-FM3-T	

REV.	DESCRIPTION	REV. DATE

This drawing and information contained thereon is the property of ABB (XIAMEN) Switchgear CO. LTD. and shall not be used, reproduced for any purpose ,or shown to third parties without the written consent of ABB (XIAMEN) Switchgear CO. LTD.

==A01=FM3+-X9

备注	外引电缆	设备	线号	端子号	型号	线号	设备	外引电缆	备注
				1	NEK4		-EB2:1		
				2	NEK4		-SB2:13		
		-FCM90:2		3	NEK4		-BGD1:1		
		-FCM92:3		4	NEK4		-EB2:2		
				5	NEK4		-EA2:A2		
		-X11:4		6	NEK4		-EA1:A2		
		-SB2:14		7	NEK4		-EA2:A1		
		-EA1:A1		8	RCT4SW		-BGD1:2		
				9	NEK4		-X9:11		
		-FCM92:2		10	NEK4		-KM1:1		
		-X9:9		11	NEK4		-QAB:23		
		-QAB:33		12	NEK4		-KM1:A1		
	△	-电机加热器		13	NEK4		-KM1:2		
	△	-电机加热器		14	NEK4		-KM1:4		

☆ 柜间小母线,随柜提供

△ 柜间控制电路(由客户自备)

短接排

✕ 分隔板

(测试短接片

O 其他

REV.	DESCRIPTION	REV. DATE

DRAWN	XINYU LIU	TITLE
CHECKED	Jianjun-Wang	端子图表 ==A01=FM3+-X9
APPROVED	Yongsheng.Li	CONTRACT NO.:
FIRST DATE	2025/4/28	504485024

FUNCTION 电机柜(800mm宽柜体)

PROJECT 天津渤化永利丁辛醇项目

=	FM3	SHEET NO. 7
SCALE	1:1	TOTAL PAGES 13
DRAWING NO.	XZS1-48353-A01-FM3-T	

REV.	DESCRIPTION	REV. DATE

This drawing and information contained thereon is the property of ABB (XIAMEN) Switchgear CO. LTD. and shall not be used, reproduced for any purpose ,or shown to third parties without the written consent of ABB (XIAMEN) Switchgear CO. LTD.

==A01=FM3+-X11

备注	外引电缆	设备	线号	端子号	型号	线号	设备	外引电缆	备注
6黑色	☆	-X11.2:1		1	A3C 6		-FCM90:1		
6黑色	☆	-X11.1:1							
6黑色	☆	-X11.2:2		2	A3C 6				
6黑色	☆	-X11.1:2							
6黑色	☆	-X11.2:3		3	A3C 6				
6黑色	☆	-X11.1:3							
6黑色	☆	-X11.2:4		4	A3C 6		-X9:6		
6黑色	☆	-X11.1:4							
6黑色	☆	-X11.2:5		5	A3C 6		-FCM10:3		
6黑色	☆	-X11.1:5							
6黑色	☆	-X11.2:6		6	A3C 6		-FCM10:1		
6黑色	☆	-X11.1:6							
6黑色	☆	-X11.2:7		7	A3C 6		-FCM30:3		
6黑色	☆	-X11.1:7							
6黑色	☆	-X11.2:8		8	A3C 6		-FCM30:1		
6黑色	☆	-X11.1:8							

☆ 柜间小母线,随柜提供

△ 柜间控制电路(由客户自备)

短接排

分隔板

(测试短接片

O 其他

REV.	DESCRIPTION	REV. DATE

DRAWN	XINYU LIU	TITLE
CHECKED	Jianjun-Wang	端子图表 ==A01=FM3+-X11
APPROVED	Yongsheng.Li	CONTRACT NO.:
FIRST DATE	2025/4/28	504485024

FUNCTION

PROJECT

电机柜(800mm宽柜体)

天津渤化永利丁辛醇项目

=	FM3	SHEET NO	8
SCALE	1:1	TOTAL PAGES	13
DRAWING NO	XZS1-48353-A01-FM3-T		

REV.	DESCRIPTION	REV. DATE

This drawing and information contained thereon is the property of ABB (XIAMEN) Switchgear CO. LTD. and shall not be used, reproduced for any purpose ,or shown to third parties without the written consent of ABB (XIAMEN) Switchgear CO. LTD.

==A01=FM3+-X13

备注	外引电缆	设备	线号	端子号	型号	线号	设备	外引电缆	备注
	☆	-X13.1:1		1	A4C 4		-FCM65:1		
	☆	-X13.2:1							
	☆	-X13.1:2		2	A4C 4		-FCM65:3		
	☆	-X13.2:2							
	☆	-X13.1:3		3	A4C 4		-FCM65:5		
	☆	-X13.2:3							
	☆	-X13.1:4		4	A4C 4		-X6:4		
	☆	-X13.2:4							
	☆	-X13.1:5		5	A4C 4				
	☆	-X13.2:5							
	☆	-X13.1:6		6	A4C 4				
	☆	-X13.2:6							
	☆	-X13.3:7		7	A4C 4		-FCM66:1		
	☆	-X13.4:7							
	☆	-X13.3:8		8	A4C 4		-FCM66:3		
	☆	-X13.4:8							
	☆	-X13.3:9		9	A4C 4		-FCM66:5		
	☆	-X13.4:9							
	☆	-X13.3:10		10	A4C 4		-X6:11		
	☆	-X13.4:10							

☆ 柜间小母线,随柜提供

△ 柜间控制电路(由客户自备)

短接排

✕ 分隔板

(测试短接片

O 其他

DRAWN	XINYU LIU	TITLE
CHECKED	Jianjun-Wang	端子图表 ==A01=FM3+-X13
APPROVED	Yongsheng.Li	CONTRACT NO.:
FIRST DATE	2025/4/28	504485024
REV. DATE		
REV.		
DESCRIPTION		

FUNCTION 电机柜(800mm宽柜体)

PROJECT 天津渤化永利丁辛醇项目

=	FM3	SHEET NO.	9
SCALE	1:1	TOTAL PAGES	13
DRAWING NO.	XZS1-48353-A01-FM3-T		

REV.	DESCRIPTION	REV. DATE

This drawing and information contained thereon is the property of ABB (XIAMEN) Switchgear CO. LTD. and shall not be used, reproduced for any purpose ,or shown to third parties without the written consent of ABB (XIAMEN) Switchgear CO. LTD.

==A01=FM3+-X14

备注	外引电缆	设备	线号	端子号	型号	线号	设备	外引电缆	备注
	☆	-X14:2		● 1	NEK4		-BR20:10		
	☆	-X14:1		● 2	NEK4				
	☆	-X14:4		● 3	NEK4		-BR20:9		
	☆	-X14:3		● 4	NEK4				
	☆	-X14:6		● 5	NEK4		-ST1		
	☆	-X14:5		● 6	NEK4				
	☆	-X14:8		● 7	NEK4		-PGW:25		
	☆	-X14:7		● 8	NEK4				
	☆	-X14:10		● 9	NEK4		-PGW:26		
	☆	-X14:9		● 10	NEK4				
	☆	-X14:12		● 11	NEK4		-ST1		
	☆	-X14:11		● 12	NEK4				
				13	NEK4		-BCG1:X4/1		
				14	NEK4		-BCG1:X4/2		
				15	NEK4		-BCG1:X4/3		
				16	NEK4		-SAM:P1/01		
				17	NEK4		-SAM:P1/02		
				18	NEK4		-PMM:A		
				19	NEK4		-PMM:B		
				20	NEK4		-PMM:S		
				● 21	NEK4		-BR20:7		
				● 22	NEK4		-BR25:A		
				● 23	NEK4		-BR20:6		屏蔽双绞线
				● 24	NEK4		-BR25:B		
	△	-至DCS4~20mA电流引出		25	NEK4		-AT:5		
	△	-至DCS4~20mA电流引出		26	NEK4		-AT:6		

☆ 柜间小母线,随柜提供

△ 柜间控制电路(由客户自备)

短接排

分隔板

(测试短接片

O 其他

REV.	DESCRIPTION	REV. DATE

DRAWN XINYU LIU
CHECKED Jianjun-Wang
APPROVED Yongsheng.Li
FIRST DATE 2025/4/28

TITLE 端子图表 ==A01=FM3+-X14

CONTRACT NO.: 504485024

FUNCTION 电机柜(800mm宽柜体)

PROJECT 天津渤化永利丁辛醇项目

= FM3
SCALE 1:1
SHEET NO. 10
TOTAL PAGES 13
DRAWING NO. XZS1-48353-A01-FM3-T

单线图

一次设备索引			
设备号	设备名称	数量	物料号
-QAB	真空断路器	1	VD4/P-77
-BCT1	电流互感器	1	CTA-G1K313-0475
-BCT2	电流互感器	1	CTA-G1K313-0475
-BCT3	电流互感器	1	CTA-G1K313-0475
-BAD	电容分压装置	3	DIK-06-B06N1000C-1
-QCE	接地开关	1	ET1-BGE2/3
-FA	避雷器	3	SAS-YH5WZ-10/27-1
-BCN	零序电流互感器	1	CTZ-GLMZ2150501-A1

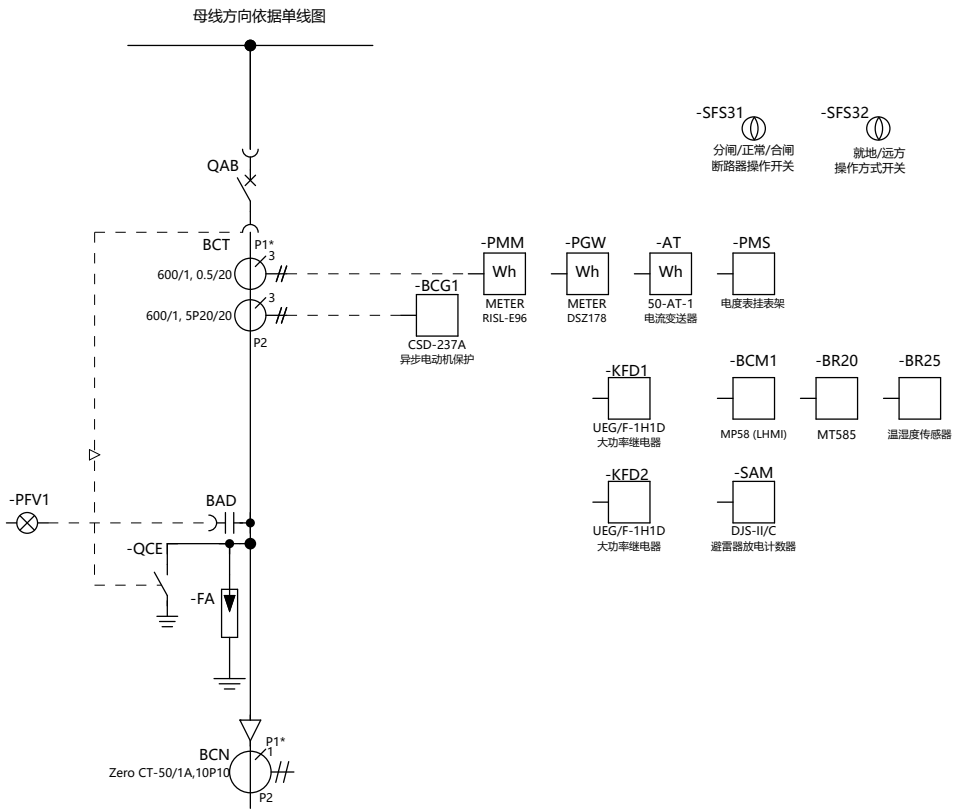

This drawing and information contained thereon is the property of ABB (XIAMEN) Switchgear CO. LTD. and shall not be used, reproduced for any purpose, or shown to third parties without the written consent of ABB (XIAMEN) Switchgear CO. LTD.

REV.	DESCRIPTION	REV. DATE

DRAWN	XINYU LIU	TITLE	单线图
CHECKED	Jianjun-Wang		
APPROVED	Yongsheng.Li	CONTRACT NO.:	504485024
FIRST DATE	2025/4/28		

FUNCTION: 电机接变频器柜（带磁平衡）

PROJECT: 天津渤化永利丁辛醇项目

= FM4 | SHEET NO 1 | SCALE 1:1 | TOTAL PAGES 14

DRAWING NO XZS1-48353-A01-FM4-S

断路器弹簧储能电机回路	控制回路	保护与信号回路	加热器回路 电缆室 100W	电缆室照明	低压室照明

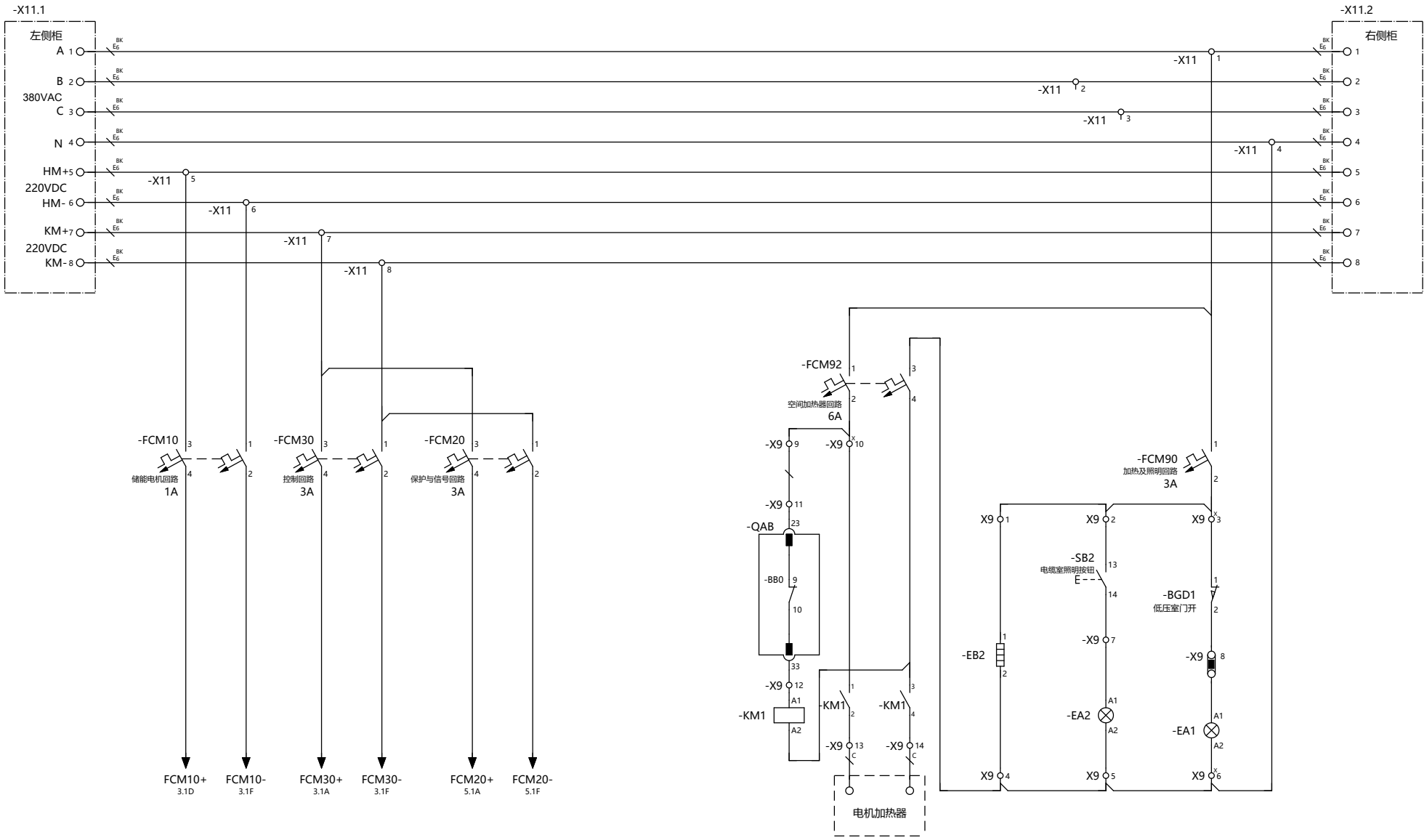

This drawing and information contained thereon is the property of ABB (XIAMEN) Switchgear CO. LTD. and shall not be used, reproduced for any purpose, or shown to third parties without the written consent of ABB (XIAMEN) Switchgear CO. LTD.

REV.	DESCRIPTION	REV. DATE

DRAWN	XINYU LIU	TITLE	电源小母线回路
CHECKED	Jianjun-Wang		
APPROVED	Yongsheng.Li	CONTRACT NO.:	504485024
FIRST DATE	2025/4/28		

ABB

FUNCTION	电机接变频器柜（带磁平衡）
PROJECT	天津渤化永利丁辛醇项目

= FM4	SHEET NO 2
SCALE 1:1	TOTAL PAGES 14
DRAWING NO	XZS1-48353-A01-FM4-S

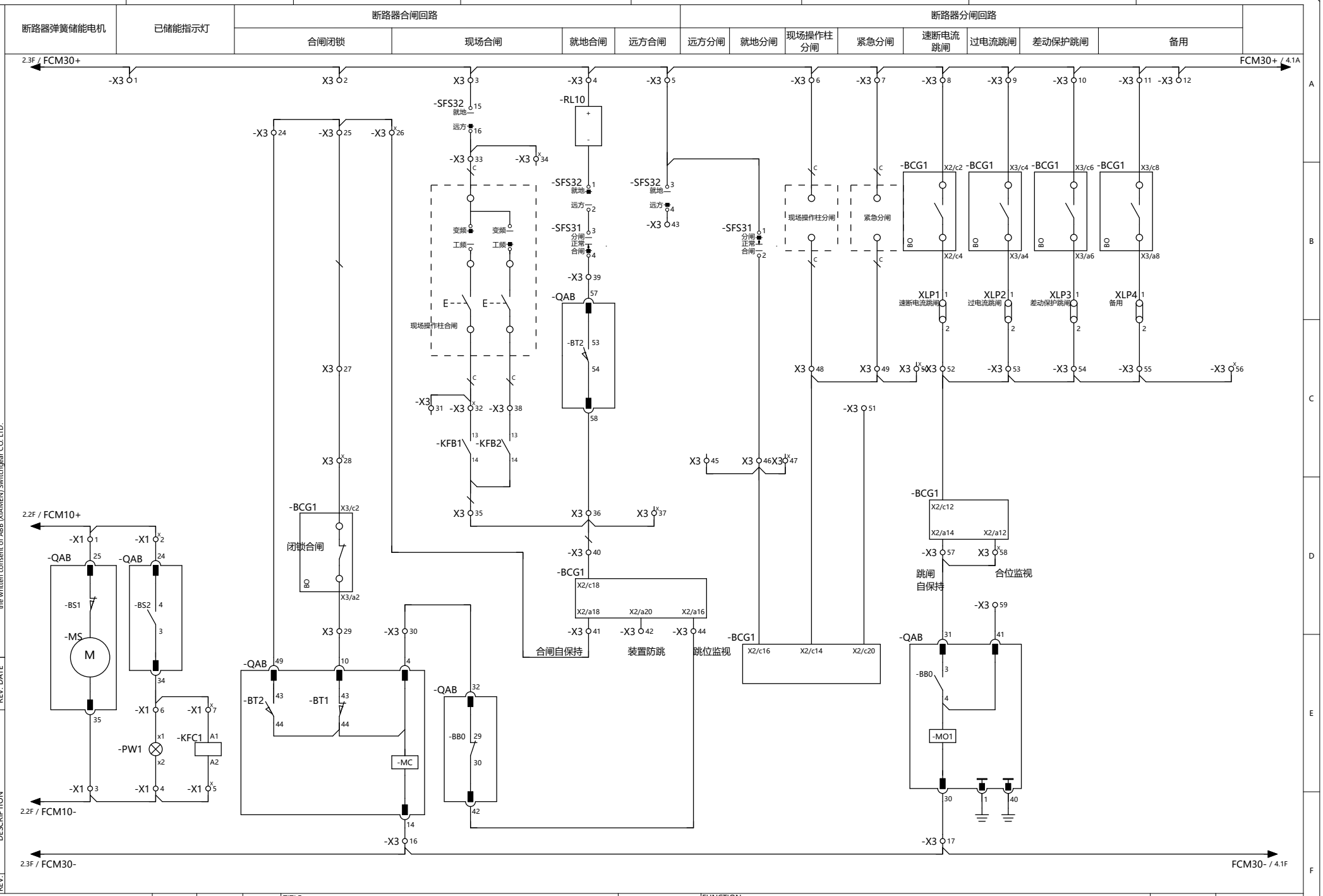

This drawing and information contained thereon is the property of ABB (XIAMEN) Switchgear CO. LTD. and shall not be used, reproduced for any purpose, or shown to third parties without the written consent of ABB (XIAMEN) Switchgear CO. LTD.

REV.	DESCRIPTION	REV. DATE

DRAWN	XINYU LIU	TITLE	控制回路
CHECKED	Jianjun-Wang		
APPROVED	Yongsheng.Li	CONTRACT NO.:	504485024
FIRST DATE	2025/4/28		

FUNCTION: 电机接变频器柜（带磁平衡）

PROJECT: 天津渤化永利丁辛醇项目

= FM4 | SHEET NO 3 | SCALE 1:1 | TOTAL PAGES 14

DRAWING NO XZS1-48353-A01-FM4-S

保护操作电源	带电显示及其闭锁回路	变频合闸允许	工频合闸允许

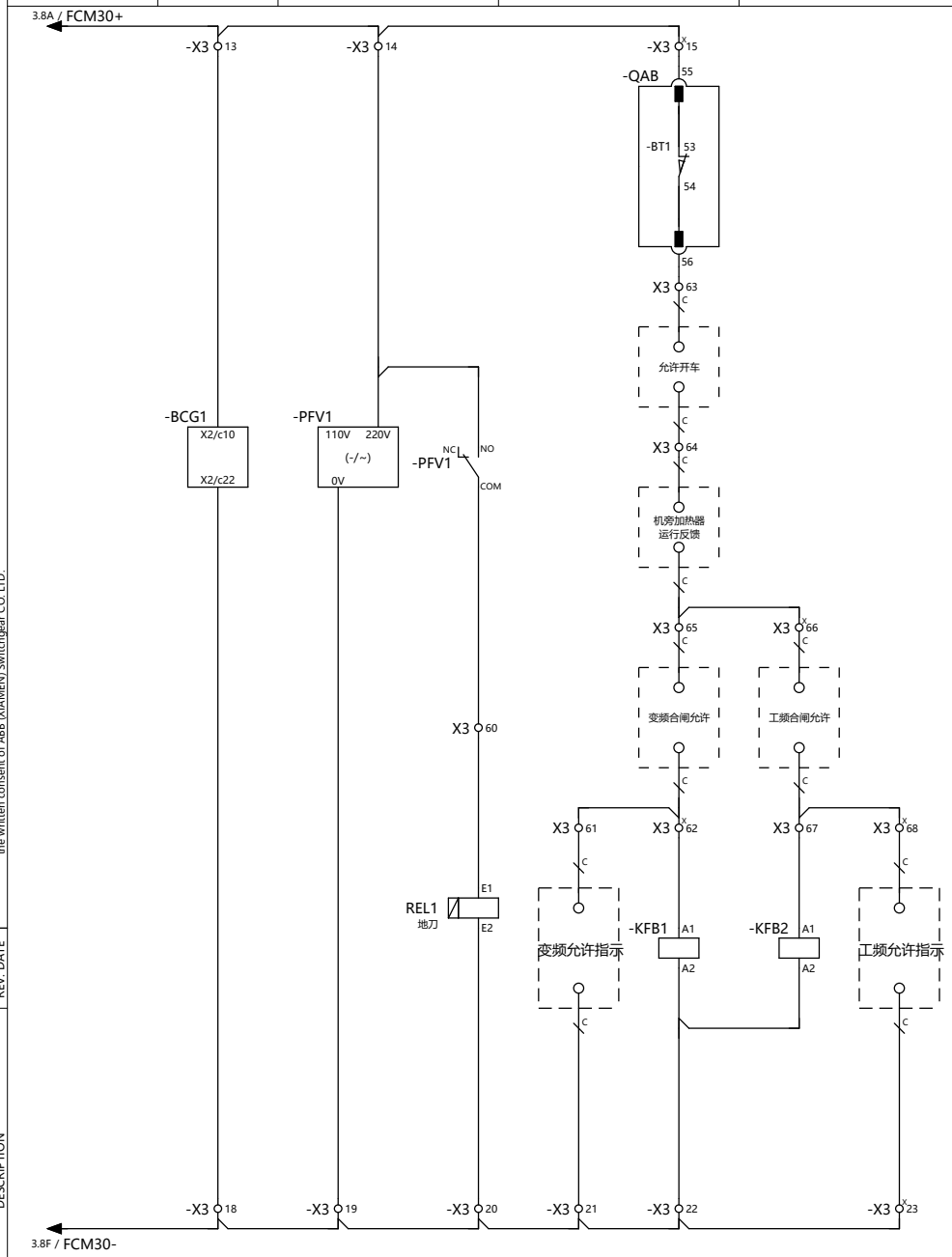

This drawing and information contained thereon is the property of ABB (XIAMEN) Switchgear CO. LTD. and shall not be used, reproduced for any purpose ,or shown to third parties without the written consent of ABB (XIAMEN) Switchgear CO. LTD.

REV.	DESCRIPTION	REV. DATE

DRAWN	XINYU LIU	TITLE	控制回路
CHECKED	Jianjun-Wang		
APPROVED	Yongsheng.Li	CONTRACT NO.:	504485024
FIRST DATE	2025/4/28		

ABB

FUNCTION	电机接变频器柜（带磁平衡）
PROJECT	天津渤化永利丁辛醇项目

=	FM4	SHEET NO	4
SCALE	1:1	TOTAL PAGES	14
DRAWING NO	XZS1-48353-A01-FM4-S		

断路器状态		断路器手车位置		接地开关状态		MT585电源	多功能表电源	电度表电源	避雷器计数器电源	电流变送电源	保护装置辅助电源
合闸	分闸	工作	试验	合闸	分闸						

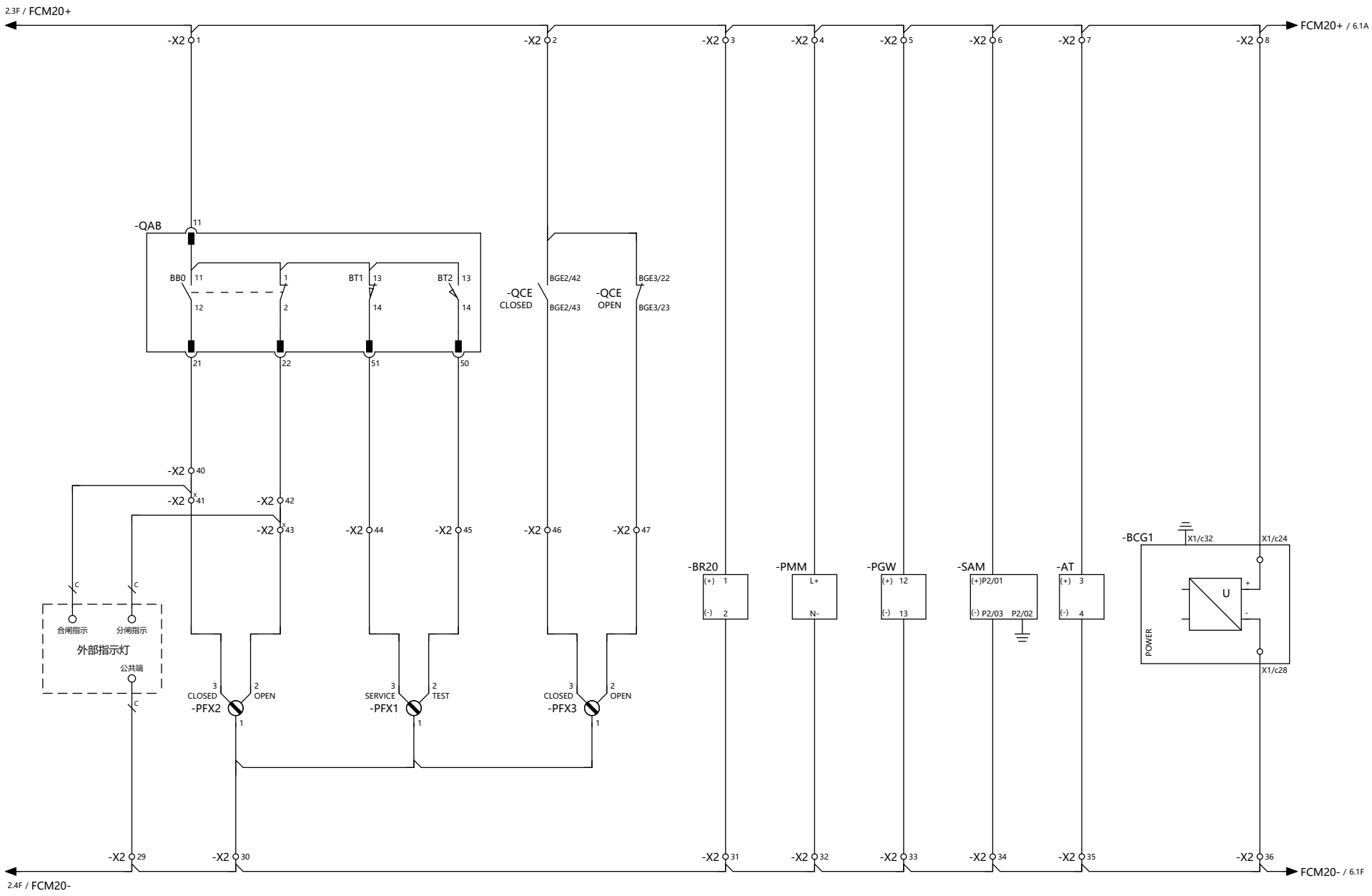

This drawing and information contained thereon is the property of ABB (XIAMEN) Switchgear CO. LTD. and shall not be used, reproduced for any purpose ,or shown to third parties without the written consent of ABB (XIAMEN) Switchgear CO. LTD.

REV.	DESCRIPTION	REV. DATE

DRAWN	XINYU LIU	TITLE	保护与信号回路
CHECKED	Jianjun-Wang		
APPROVED	Yongsheng.Li	CONTRACT NO.:	504485024
FIRST DATE	2025/4/28		

ABB

FUNCTION	电机接变频器柜（带磁平衡）
PROJECT	天津渤化永利丁辛醇项目

=	FM4	SHEET NO	5
SCALE	1:1	TOTAL PAGES	14
DRAWING NO	XZS1-48353-A01-FM4-S		

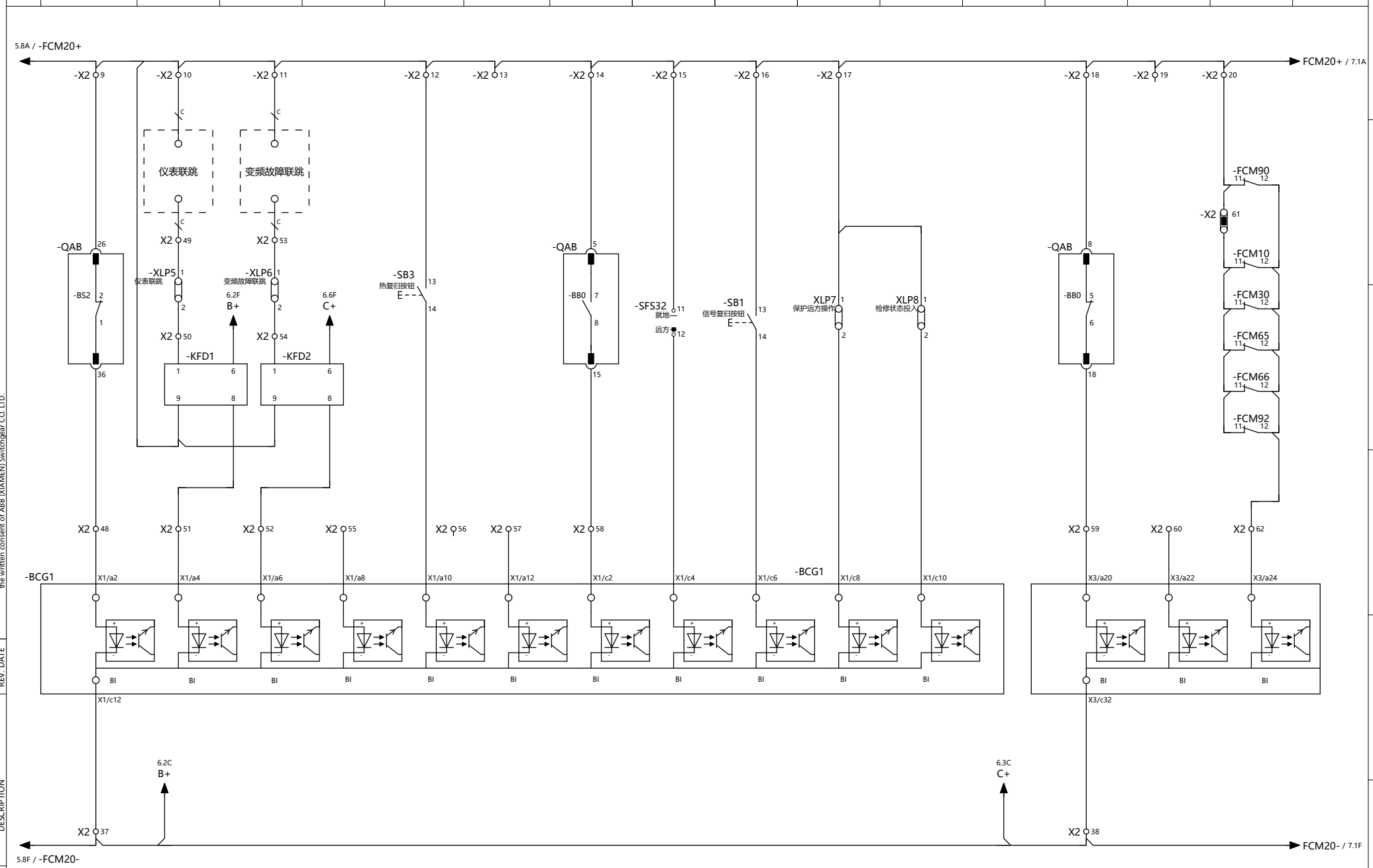

This drawing and information contained thereon is the property of ABB (XIAMEN) Switchgear CO. LTD. and shall not be used, reproduced for any purpose ,or shown to third parties without the written consent of ABB (XIAMEN) Switchgear CO. LTD.

REV.	DESCRIPTION	REV. DATE

DRAWN	XINYU LIU	TITLE	保护与信号回路
CHECKED	Jianjun-Wang		
APPROVED	Yongsheng.Li	CONTRACT NO.:	504485024
FIRST DATE	2025/4/28		

ABB

FUNCTION	电机接变频器柜（带磁平衡）
PROJECT	天津渤化永利丁辛醇项目

=	FM4	SHEET NO	6
SCALE	1:1	TOTAL PAGES	14
DRAWING NO	XZS1-48353-A01-FM4-S		

断路器手车位置		接地开关状态		邻柜继保装置故障	备用
工作	试验	合闸	分闸		

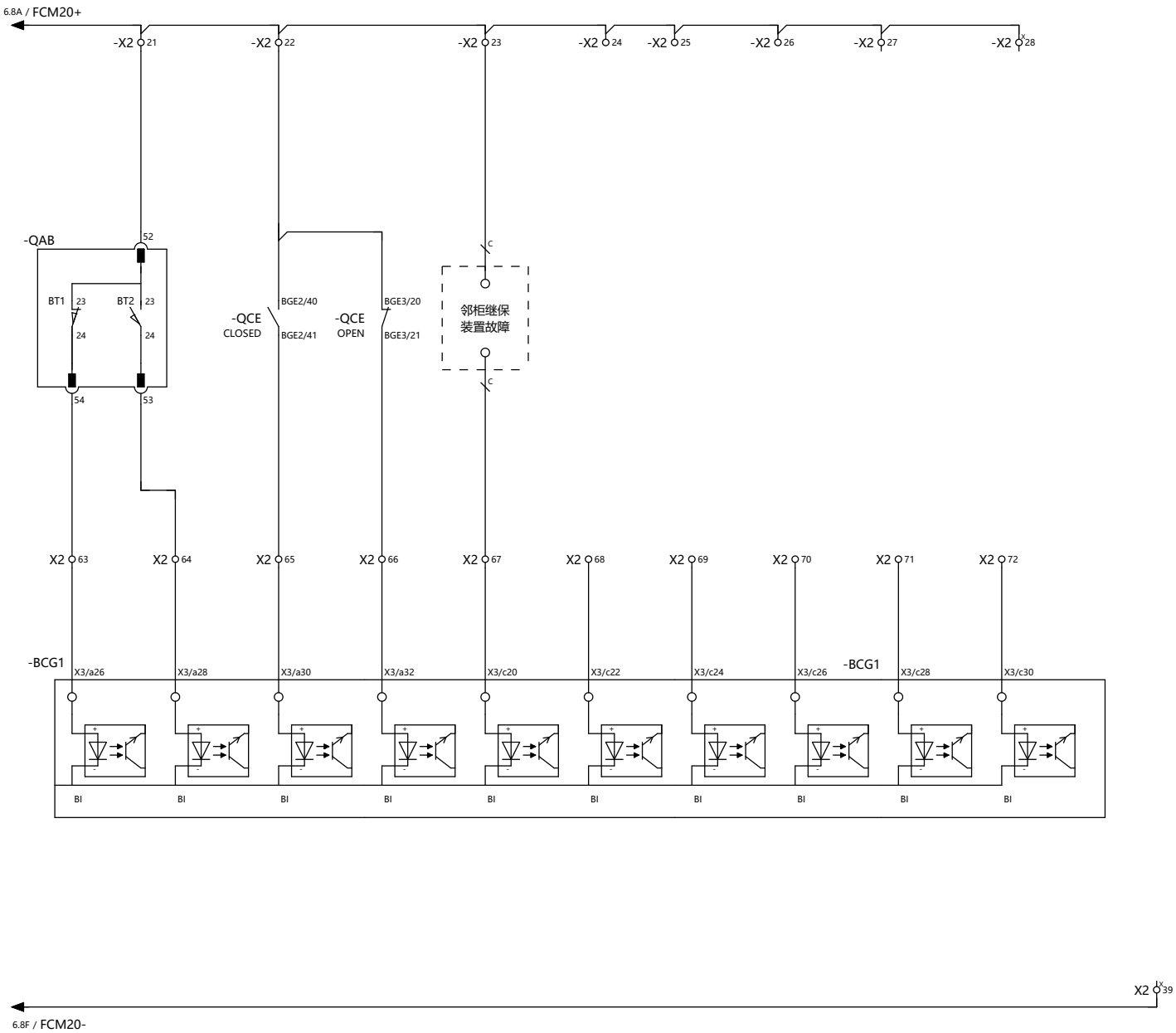

This drawing and information contained thereon is the property of ABB (XIAMEN) Switchgear CO. LTD. and shall not be used, reproduced for any purpose, or shown to third parties without the written consent of ABB (XIAMEN) Switchgear CO. LTD.

REV.	DESCRIPTION	REV. DATE

DRAWN	XINYU LIU	TITLE	保护与信号回路
CHECKED	Jianjun-Wang		
APPROVED	Yongsheng.Li	CONTRACT NO.:	504485024
FIRST DATE	2025/4/28		

FUNCTION: 电机接变频器柜（带磁平衡）

PROJECT: 天津渤化永利丁辛醇项目

= FM4 | SHEET NO 7 | SCALE 1:1 | TOTAL PAGES 14

DRAWING NO XZS1-48353-A01-FM4-S

断路器已储能	断路器状态		断路器手车位置		接地开关状态		就地/远方选择开关位置		保护空开信号	避雷器计数器报警信号	变频合闸允许至DCS	变频合闸允许至变频器	工频合闸允许至变频器
	合闸	分闸	工作	试验	合闸	分闸	就地	远方					

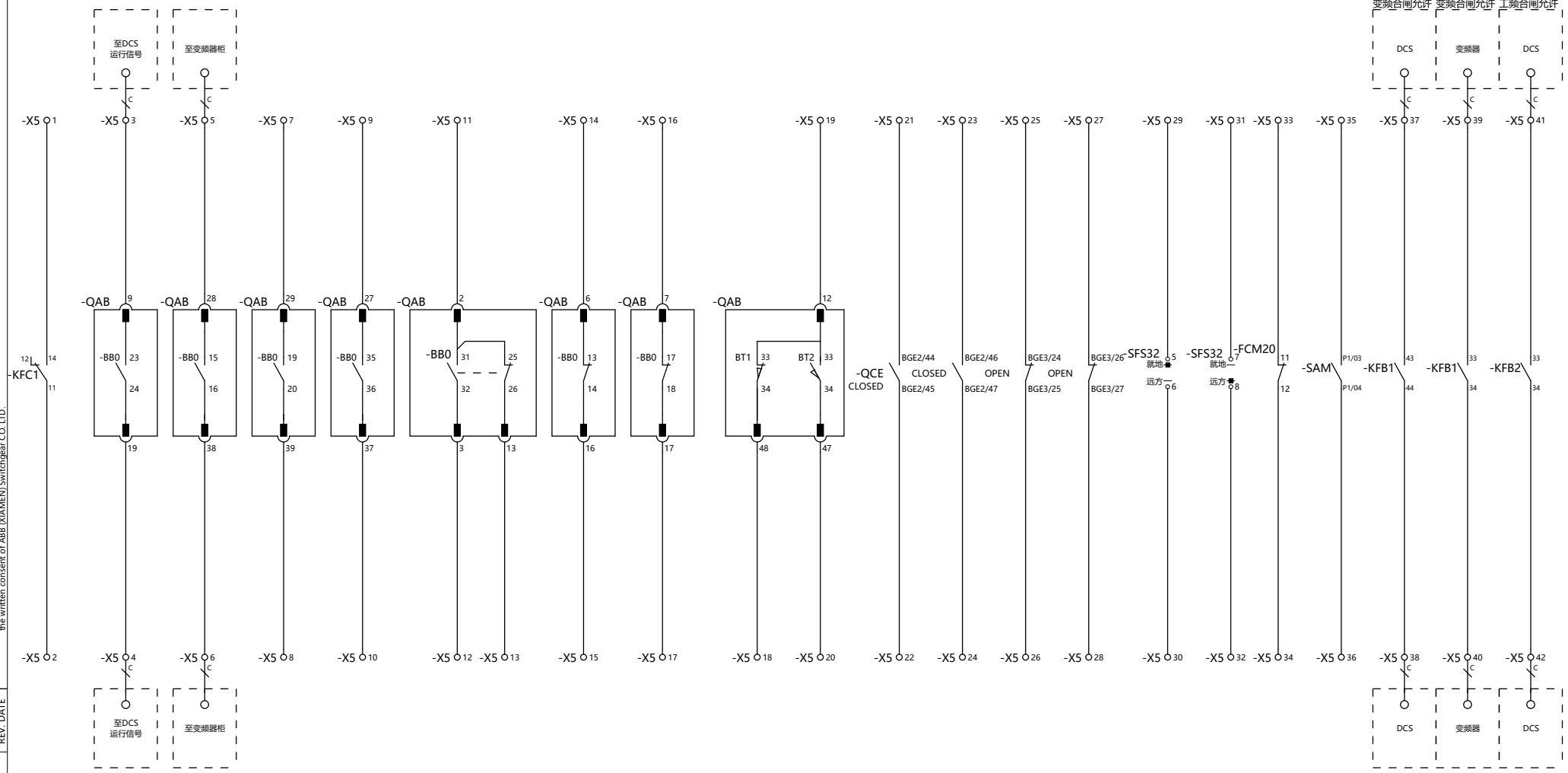

This drawing and information contained thereon is the property of ABB (XIAMEN) Switchgear CO. LTD. and shall not be used, reproduced for any purpose ,or shown to third parties without the written consent of ABB (XIAMEN) Switchgear CO. LTD.

REV.	DESCRIPTION	REV. DATE

DRAWN	XINYU LIU	TITLE	备用回路
CHECKED	Jianjun-Wang		
APPROVED	Yongsheng.Li	CONTRACT NO.:	504485024
FIRST DATE	2025/4/28		

ABB

FUNCTION	电机接变频器柜（带磁平衡）
PROJECT	天津渤化永利丁辛醇项目

=	FM4	SHEET NO	8
SCALE	1:1	TOTAL PAGES	14
DRAWING NO	XZS1-48353-A01-FM4-S		

事故总信号	控制回路断线	备用	非保持信号			远方合闸	远方分闸
			保护动作	运行异常告警	装置故障告警		

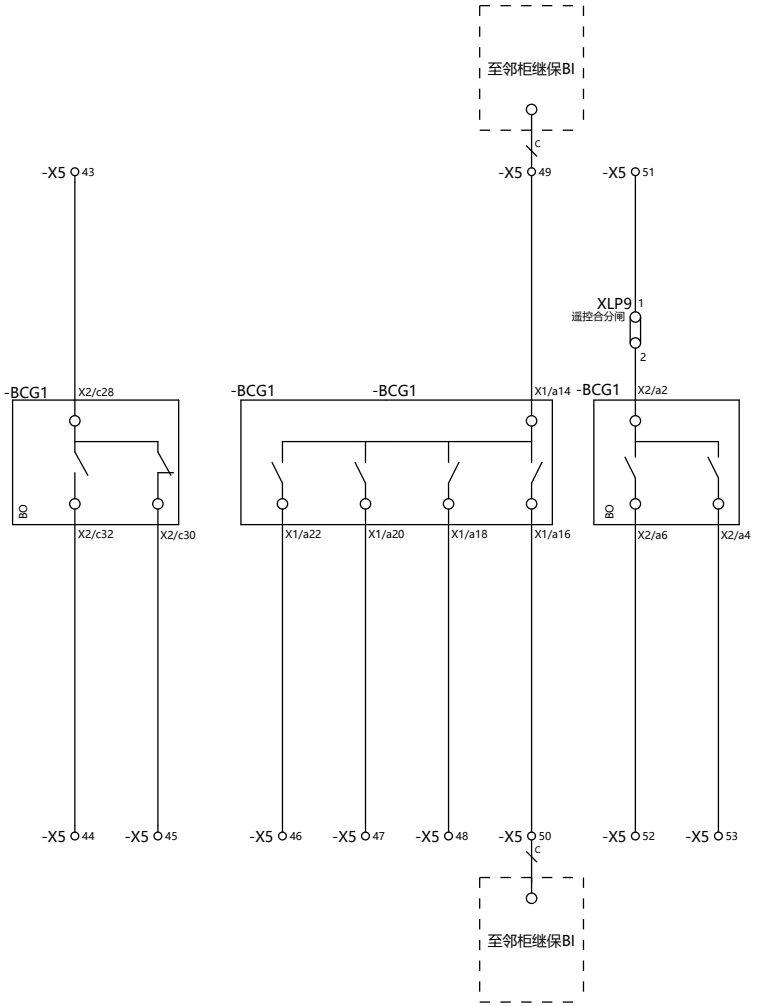

-X5 58 -X5 59 -X5 60 -X5 61 -X5 62

-X5 63 -X5 64 -X5 65 -X5 66 -X5 67

This drawing and information contained thereon is the property of ABB (XIAMEN) Switchgear CO. LTD. and shall not be used, reproduced for any purpose ,or shown to third parties without the written consent of ABB (XIAMEN) Switchgear CO. LTD.

REV.	DESCRIPTION	REV. DATE

DRAWN	XINYU LIU	TITLE	保护备用回路
CHECKED	Jianjun-Wang		
APPROVED	Yongsheng.Li	CONTRACT NO.:	504485024
FIRST DATE	2025/4/28		

FUNCTION: 电机接变频器柜（带磁平衡）

PROJECT: 天津渤化永利丁辛醇项目

= FM4 | SHEET NO 9 | SCALE 1:1 | TOTAL PAGES 14

DRAWING NO. XZS1-48353-A01-FM4-S

通讯小母线	保护对时口	避雷器计数器通讯	多功能表485通讯

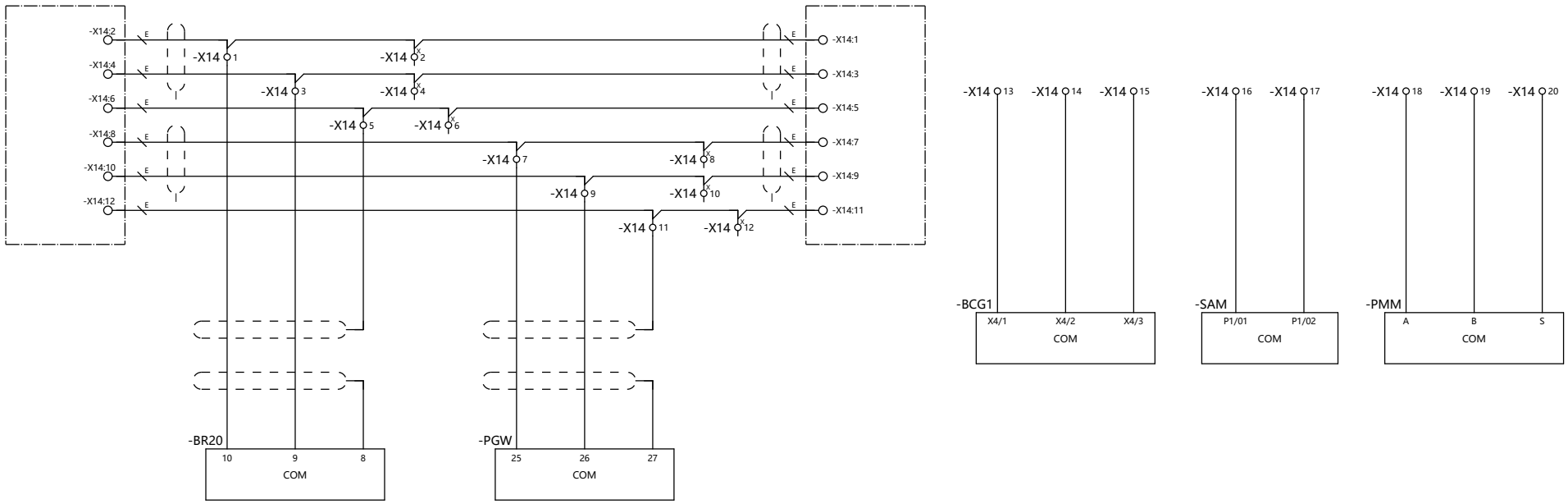

This drawing and information contained thereon is the property of ABB (XIAMEN) Switchgear CO. LTD. and shall not be used, reproduced for any purpose ,or shown to third parties without the written consent of ABB (XIAMEN) Switchgear CO. LTD.

REV.	DESCRIPTION	REV. DATE

DRAWN	XINYU LIU	TITLE	通信回路
CHECKED	Jianjun-Wang		
APPROVED	Yongsheng.Li	CONTRACT NO.:	504485024
FIRST DATE	2025/4/28		

FUNCTION: 电机接变频器柜（带磁平衡）

PROJECT: 天津渤化永利丁辛醇项目

=	FM4	SHEET NO	10
SCALE	1:1	TOTAL PAGES	14
DRAWING NO	XZS1-48353-A01-FM4-S		

MT585 24VDC输出	温湿度控制电源	MT585通讯接口 (与MB585通讯接口)	温湿度控制器通讯	HMI 电源及通讯 示意图	电流变送器 4-20mA输出

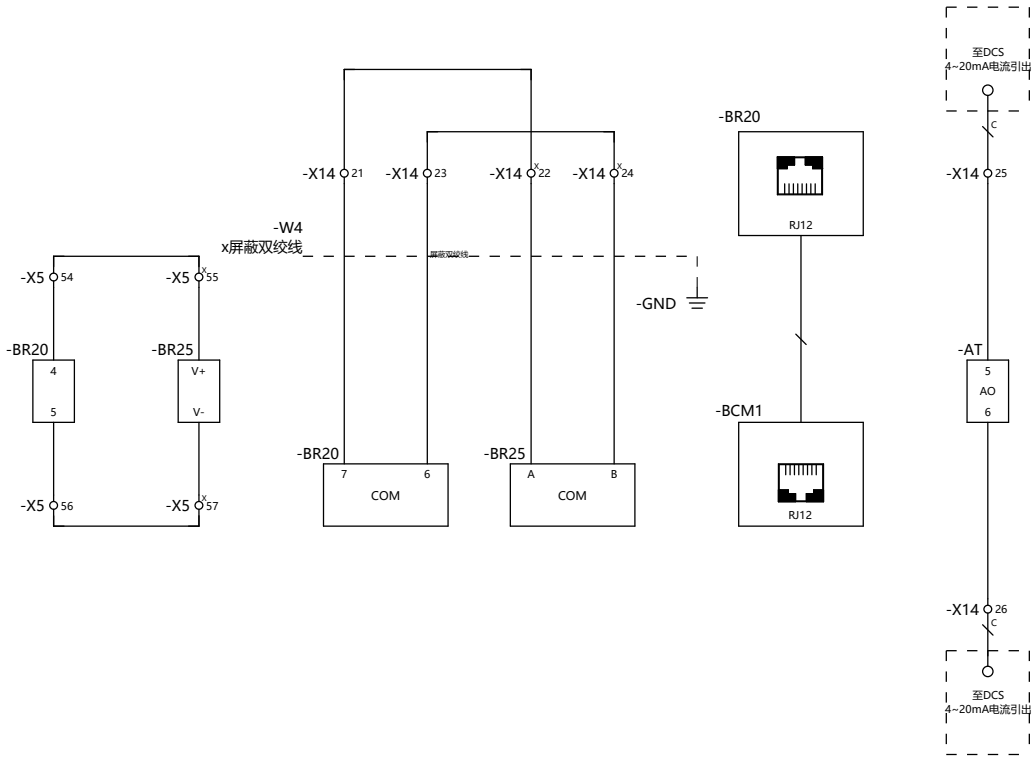

This drawing and information contained thereon is the property of ABB (XIAMEN) Switchgear CO. LTD. and shall not be used, reproduced for any purpose ,or shown to third parties without the written consent of ABB (XIAMEN) Switchgear CO. LTD.

REV.	DESCRIPTION	REV. DATE

DRAWN	XINYU LIU	TITLE	通信回路
CHECKED	Jianjun-Wang		
APPROVED	Yongsheng.Li	CONTRACT NO.:	504485024
FIRST DATE	2025/4/28		

FUNCTION: 电机接变频器柜（带磁平衡）

PROJECT: 天津渤化永利丁辛醇项目

= FM4 | SHEET NO 11
SCALE 1:1 | TOTAL PAGES 14
DRAWING NO XZS1-48353-A01-FM4-S

电压小母线

计量小母线

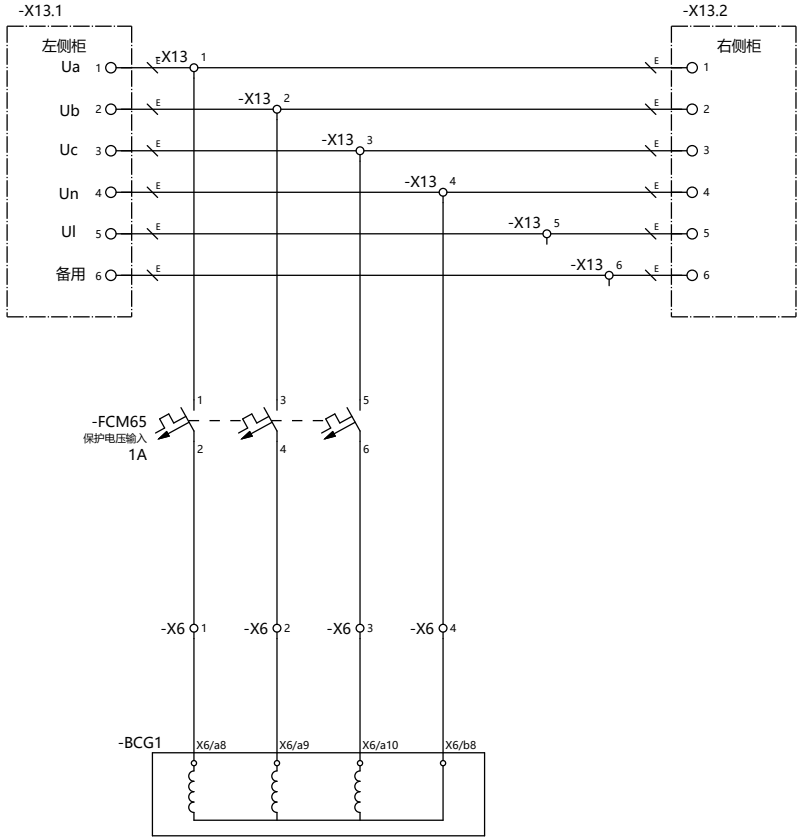

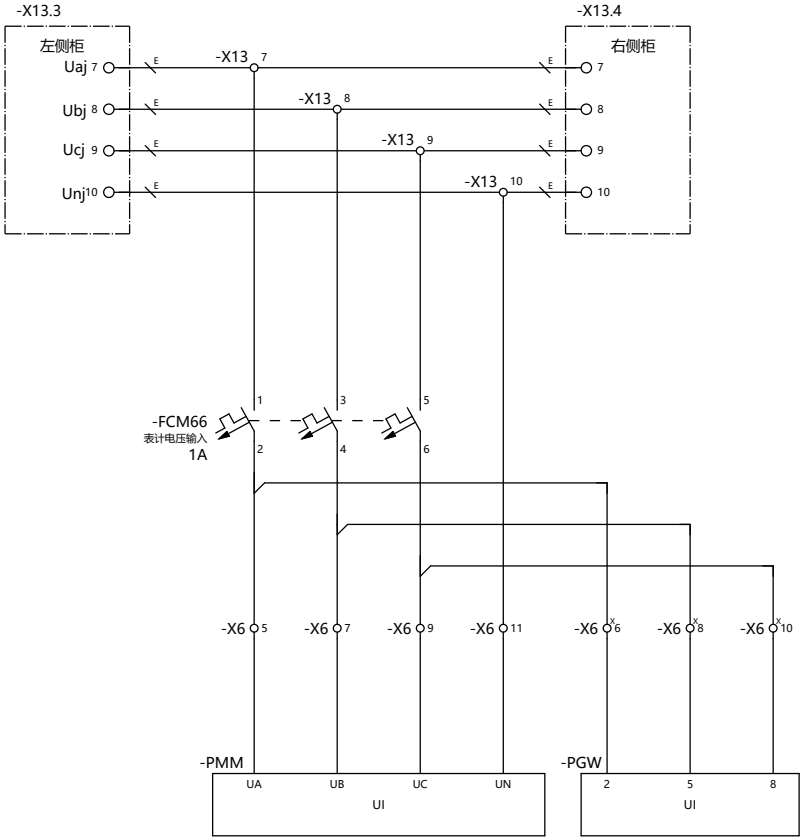

This drawing and information contained thereon is the property of ABB (XIAMEN) Switchgear CO. LTD. and shall not be used, reproduced for any purpose, or shown to third parties without the written consent of ABB (XIAMEN) Switchgear CO. LTD.

REV.	DESCRIPTION	REV. DATE

DRAWN	XINYU LIU	TITLE	电压小母线
CHECKED	Jianjun-Wang		
APPROVED	Yongsheng.Li	CONTRACT NO.:	504485024
FIRST DATE	2025/4/28		

FUNCTION: 电机接变频器柜（带磁平衡）

PROJECT: 天津渤化永利丁辛醇项目

= FM4 | SHEET NO 12 | SCALE 1:1 | TOTAL PAGES 14

DRAWING NO XZS1-48353-A01-FM4-S

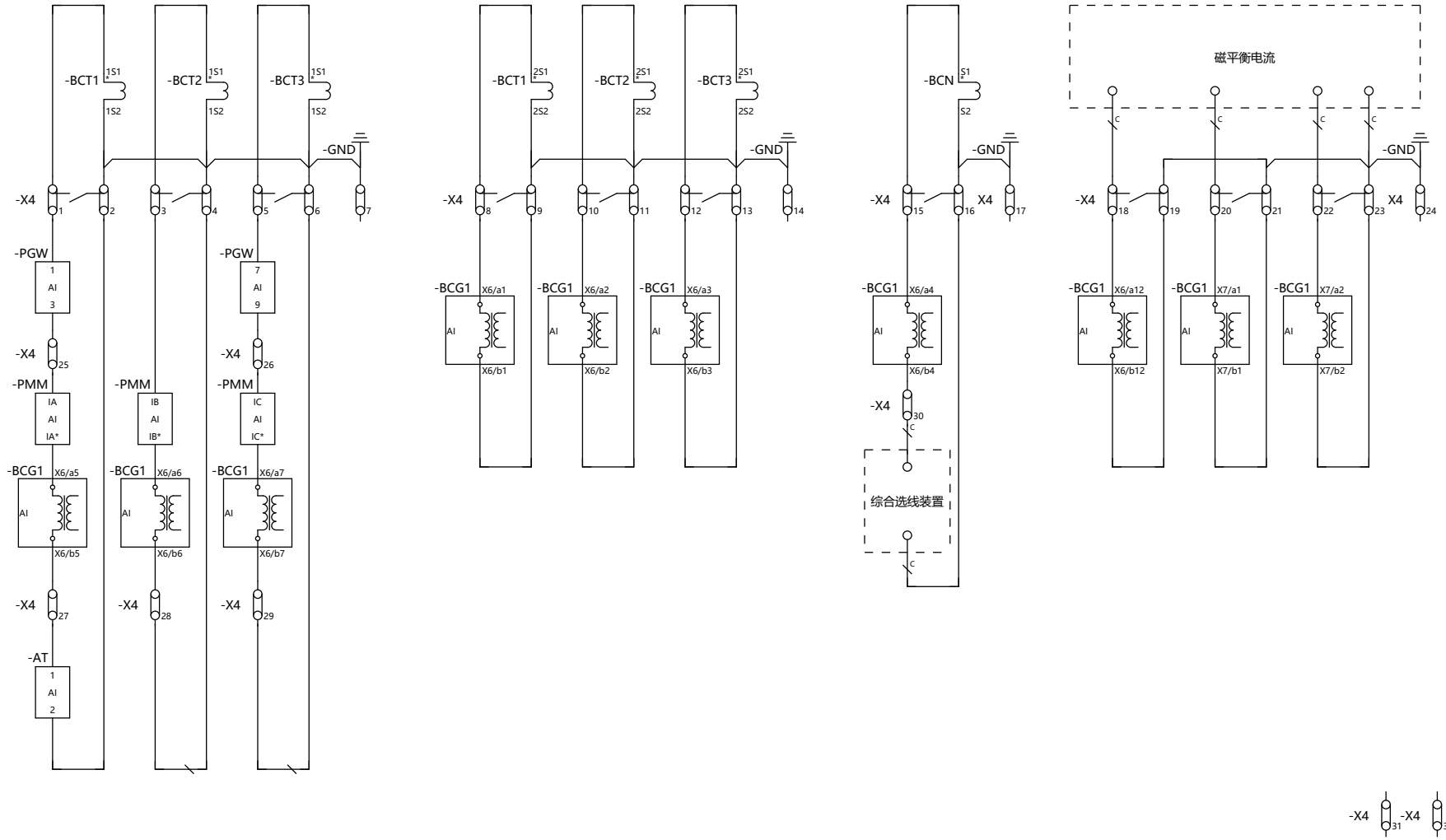

This drawing and information contained thereon is the property of ABB (XIAMEN) Switchgear CO. LTD. and shall not be used, reproduced for any purpose, or shown to third parties without the written consent of ABB (XIAMEN) Switchgear CO. LTD.

REV.	DESCRIPTION	REV. DATE

DRAWN	XINYU LIU	TITLE	电流回路
CHECKED	Jianjun-Wang		
APPROVED	Yongsheng.Li	CONTRACT NO.:	504485024
FIRST DATE	2025/4/28		

FUNCTION: 电机接变频器柜（带磁平衡）

PROJECT: 天津渤化永利丁辛醇项目

= FM4 | SHEET NO 13 | SCALE 1:1 | TOTAL PAGES 14

DRAWING NO XZS1-48353-A01-FM4-S

VD4

-QAB

VD4/P-77

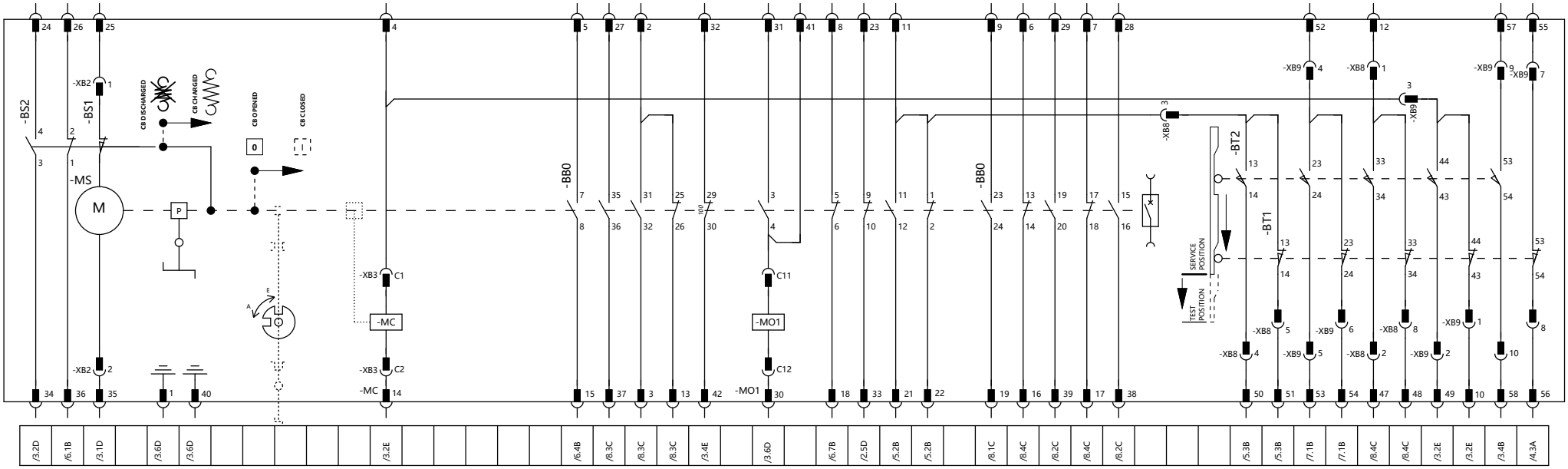

接地开关与断路器手车具有可靠的机械闭锁： A)
只有当断路器手车位于试验位置时，才允许操作接地开关 B)
只有当接地开关处于分状态时,断路器手车才允许由试验位置推入运行位置。

电气控制接线图/接点位置参考：
此图所示状态为：断路器手车工作位置 断路器处于分闸状态 操作机构弹簧未储能

名称	描述	备注
-BS1	储能电机限位开关	
-MS	弹簧操作机构储能电机	
-MC	合闸脱扣器	
-MO1	第一分闸脱扣器	

名称	描述	备注
-BS2	合闸弹簧储能/未储能信号触点	
-BB0	与断路器主轴联动的辅助开关	
-BT1	限位开关(手车位于运行位置)	
-BT2	限位开关(手车位于试验位置)	

This drawing and information contained thereon is the property of ABB (XIAMEN) Switchgear CO. LTD. and shall not be used, reproduced for any purpose, or shown to third parties without the written consent of ABB (XIAMEN) Switchgear CO. LTD.

REV.	DESCRIPTION	REV. DATE

DRAWN	XINYU LIU	TITLE	断路器接线图
CHECKED	Jianjun-Wang		
APPROVED	Yongsheng.Li	CONTRACT NO.:	504485024
FIRST DATE	2025/4/28		

FUNCTION: 电机接变频器柜（带磁平衡）

PROJECT: 天津渤化永利丁辛醇项目

= FM4	SHEET NO 14
SCALE 1:1	TOTAL PAGES 14
DRAWING NO	XZS1-48353-A01-FM4-S

设备清单(柜体)

序号	设备号	设备名称	物料号	数量	制造商	型号	设备参数
1	-BAD	电容分压装置	DIK-06-B06N1000C-1	3	/	B06N-1000C-1	Un=6kV
2	-BCN	零序电流互感器	CTZ-GLMZ2150501-A1	1	ABB	LMZ215-80-120	50/1A,CORE:2VA/10P10,120mm
3	-BCT1	电流互感器	CTA-G1K313-0475	1	ABB	LZZBJ9-12/150b/2	31.5KA/3SEC,600/1A,C1:0.5/20VA;C2:5P20/20VA;
4	-BCT2	电流互感器	CTA-G1K313-0475	1	ABB	LZZBJ9-12/150b/2	31.5KA/3SEC,600/1A,C1:0.5/20VA;C2:5P20/20VA;
5	-BCT3	电流互感器	CTA-G1K313-0475	1	ABB	LZZBJ9-12/150b/2	31.5KA/3SEC,600/1A,C1:0.5/20VA;C2:5P20/20VA;
6	-EA2	LED电缆室照明灯	L-CL10-1C-W-AA-CA	1	PEAKS	CL10-1C-W-AA	AC198-242V
7	-EB2	加热器	EP-HEATER-100W	1	SANYANG	1FZEK833B	100W
8	-FA	避雷器	SAS-YH5WZ-10/27-1	3	西安神电	YH5WZ-10/27	额定电压:10KV;持续运行电压:8.0KV;雷电冲击残压:27KV(8/20US 5KA);2ms方波通流容量:400A
9	-QAB	真空断路器	VD4/P-77	1	ABB	VD4	NEW VD4 P(旋转式辅助开关) WITHOUT RL1 WITH 7NO+7NC WITHOUT MT
10	-QCE	接地开关	ET1-BGE2/3	1	ABB	ET1	ET1 WITH BGE2&BGE3
11	-REL1	闭锁电磁铁	EP-MAGNET	1	PEAKS	EM10-S	/

This drawing and information contained thereon is the property of ABB (XIAMEN) Switchgear CO. LTD. and shall not be used, reproduced for any purpose ,or shown to third parties without the written consent of ABB (XIAMEN) Switchgear CO. LTD.

REV.	DESCRIPTION	REV. DATE

DRAWN	XINYU LIU	TITLE	设备清单(柜体)
CHECKED	Jianjun-Wang		
APPROVED	Yongsheng.Li	CONTRACT NO.:	504485024
FIRST DATE	2025/4/28		

FUNCTION: 电机接变频器柜（带磁平衡）

PROJECT: 天津渤化永利丁辛醇项目

= FM4 | SHEET NO 1

SCALE 1:1 | TOTAL PAGES 3

DRAWING NO XZS1-48353-A01-FM4-E

设备清单(低压室面板)

序号	设备号	设备名称	物料号	数量	制造商	型号	设备参数
1	-BCG1	电动机保护	CS-BHYL-05	1	北京四方	CSD-237A-G	装置电源：DC220V;电流输入：1A;电压输入：AC100V;
2	-BCM1	就地显示器	RLY-MP58	1	ABB	MP58 （LHMI）	/
3	-PFV1	强制型带电显示器	VIO-DXN-Q-A10-1	1	LEELEN	DXN-Q	DXN-Q 强制型带电显示器UGZS1 3KV/6KV/10kV，辅助电源：AC/DC 220/110V
4	-PFX1	手车位置指示	PIL-ADWZ25-B/2	1	LEELEN	ADWZ25-B/2	98-242V AC/DC,TRUCK POSITION
5	-PFX2	断路器状态指示	PIL-ADWZ25-K/2	1	LEELEN	ADWZ25-K/2	98-242V AC/DC,CB. STATUS
6	-PFX3	接地开关状态指示	PIL-ADWZ25-E/1	1	LEELEN	ADWZ25-E/1	98-242V AC/DC,EARTHING SWITCH STATUS
7	-PMM	多功能表	CS-BHYL-09	1	川泽电气	RISL-E96-5A-N-N-N-N	装置电源：DC220V ;电流输入：1A;电压输入：AC100V
8	-PW1	白色指示灯	LSA-CL2-520C	1	ABB	CL2-520C	Un=220V DC,WHITE
9	-RL10	五防锁	CS-BHYL-08	1	珠海优特电力科技股份有限公司	DNBS-2J	/
10	-SAM	高灵敏避雷器放电计数器	SAK-DJSII-C-11	1	安徽通辰	DJS-II/C	Un=110~220DC/AC 4.5m;3m
11	-SB1	黑色按钮	PBA-CP1-10B-11	1	ABB	CP1-10B-11	1NO+1NC,不带标牌套
12	-SB2	黑色自锁按钮	PBA-CP2-10B-11	1	ABB	CP2-10B-11	1NO+1NC,不带标牌套
13	-SB3	黑色按钮	PBA-CP1-10B-11	1	ABB	CP1-10B-11	1NO+1NC,不带标牌套
14	-SFS31	选择开关	SSJ-E01-2-401	1	JIANGYIN CHANGJIANG	LW38D-164B0339/2PY-DAN-AX	
15	-SFS32	选择开关	SSJ-E02-4-402	1	JIANGYIN CHANGJIANG	LW38D-164N1257/4P-AX	
16	-XLP1	插拔式压板	T-JY3-2	1	UPUN	JY3-2	驼色
17	-XLP2	插拔式压板	T-JY3-2	1	UPUN	JY3-2	驼色
18	-XLP3	插拔式压板	T-JY3-2	1	UPUN	JY3-2	驼色
19	-XLP4	插拔式压板	T-JY3-2	1	UPUN	JY3-2	驼色
20	-XLP5	插拔式压板	T-JY3-2	1	UPUN	JY3-2	驼色
21	-XLP6	插拔式压板	T-JY3-2	1	UPUN	JY3-2	驼色
22	-XLP7	插拔式压板	T-JY3-2	1	UPUN	JY3-2	驼色
23	-XLP8	插拔式压板	T-JY3-2	1	UPUN	JY3-2	驼色
24	-XLP9	插拔式压板	T-JY3-2	1	UPUN	JY3-2	驼色

This drawing and information contained thereon is the property of ABB (XIAMEN) Switchgear CO. LTD. and shall not be used, reproduced for any purpose ,or shown to third parties without the written consent of ABB (XIAMEN) Switchgear CO. LTD.

REV.	DESCRIPTION	REV. DATE

DRAWN	XINYU LIU	TITLE	设备清单(低压室面板)
CHECKED	Jianjun-Wang		
APPROVED	Yongsheng.Li	CONTRACT NO.:	504485024
FIRST DATE	2025/4/28		

FUNCTION: 电机接变频器柜（带磁平衡）

PROJECT: 天津渤化永利丁辛醇项目

= FM4	SHEET NO 2
SCALE 1:1	TOTAL PAGES 3
DRAWING NO XZS1-48353-A01-FM4-E	

设备清单(低压室)

序号	设备号	设备名称	物料号	数量	制造商	型号	设备参数
1	-AT	电流变送器	TDA-50AT1-158O	1	Ribar Electric	50-AT-1	Uaux=220V DC,INPUT:0-1A,OUTPUT:4-20mA
2	-BGD1	微动开关	EP-LVMS	1	PEAKS	TS11-001-01	MECHANICAL LIFE TIME>1000000TIMES
3	-BR20	TEMPERATURE MONITOR	RLY-MT585	1	ABB	MT585	100-240VDC/AC
4	-BR25	Humidity & Temperature Sensor	1YHT010000P0009	1	/	/	/
5	-EA1	LED低压室照明灯	L-CL10-1C-W-AA	1	PEAKS	CL10-1C-W-AA	SUPPLY: AC198~242V; POWER: <4W
6	-FCM10	微型空气开关	MCBA-202M-C1DC;MBDA-S2C-H11R	1;1	ABB	S202M-C1DC;S2C-H11R	Un=440V DC,In=1A,2-POLE
7	-FCM20	微型空气开关	MCBA-202M-C3DC;MBDA-S2C-H11R	1;1	ABB	S202M-C3DC;S2C-H11R	Un=440V DC,In=3A,2-POLE
8	-FCM30	微型空气开关	MCBA-202M-C3DC;MBDA-S2C-H11R	1;1	ABB	S202M-C3DC;S2C-H11R	Un=440V DC,In=3A,2-POLE
9	-FCM65	微型空气开关	MCBA-2030001R0014;MBDA-S2C-H11R	1;1	ABB	S203-C1;S2C-H11R	Un=400V AC,In=1A,3-POLE
10	-FCM66	微型空气开关	MCBA-2030001R0014;MBDA-S2C-H11R	1;1	ABB	S203-C1;S2C-H11R	Un=400V AC,In=1A,3-POLE
11	-FCM90	微型空气开关	MCBA-2010001R0034;MBDA-S2C-H11R	1;1	ABB	S201-C3;S2C-H11R	Un=230V AC,In=3A,1-POLE
12	-FCM92	微型空气开关	MCBA-2020001R0064;MBDA-S2C-H11R	1;1	ABB	S202-C6;S2C-H11R	Un=400V AC/125V DC,In=6A,2-POLE
13	-KFB1	中间继电器	RLY-KC631ZR0315	1	ABB	KC6-31Z	Uaux=220-240V DC,3NO+1NC CONTACTS
14	-KFB2	中间继电器	RLY-KC631ZR0315	1	ABB	KC6-31Z	Uaux=220-240V DC,3NO+1NC CONTACTS
15	-KFC1	中间继电器	RLY-CRMX220DC4	1	ABB	CRMX220DC4	CR-MX220DC4,UN=220V DC
16	-KFD1	轨道继电器	CS-504485024-01	1	北京四方	CSN-11	/
17	-KFD2	轨道继电器	CS-504485024-01	1	北京四方	CSN-11	/
18	-KM1		RLY-B6-40-00-02	1	/	B6-40-00	Uaux=220-240V AC,4NO CONTACT
19	-PGW	电能表	CS-BHYL-07	1	Wisdom	DSZ178	装置电源：DC220V;电流输入：1A;电压输入：AC100V
20	-PMS	电度表挂表架	PMM-AUX-01	1	/	270	

This drawing and information contained thereon is the property of ABB (XIAMEN) Switchgear CO. LTD. and shall not be used, reproduced for any purpose ,or shown to third parties without the written consent of ABB (XIAMEN) Switchgear CO. LTD.

REV.	DESCRIPTION	REV. DATE

DRAWN	XINYU LIU	TITLE	设备清单(低压室)
CHECKED	Jianjun-Wang		
APPROVED	Yongsheng.Li	CONTRACT NO.:	504485024
FIRST DATE	2025/4/28		

FUNCTION: 电机接变频器柜（带磁平衡）

PROJECT: 天津渤化永利丁辛醇项目

= FM4 | SHEET NO 3 | SCALE 1:1 | TOTAL PAGES 3

DRAWING NO XZS1-48353-A01-FM4-E

REV.	DESCRIPTION	REV. DATE

This drawing and information contained thereon is the property of ABB (XIAMEN) Switchgear CO. LTD. and shall not be used, reproduced for any purpose ,or shown to third parties without the written consent of ABB (XIAMEN) Switchgear CO. LTD.

==A01=FM4+-X1

备注	外引电缆	设备	线号	端子号	型号	线号	设备	外引电缆	备注
		-FCM10:4		1	NEK4		-QAB:25		
				2	NEK4		-QAB:24		
		-FCM10:2		3	NEK4		-QAB:35		
				4	NEK4		-PW1:x2		
				5	NEK4		-KFC1:A2		
		-QAB:34		6	NEK4		-PW1:x1		
				7	NEK4		-KFC1:A1		

☆ 柜间小母线,随柜提供

△ 柜间控制电路(由客户自备)

短接排

分隔板

(测试短接片

O 其他

DRAWN	XINYU LIU	TITLE
CHECKED	Jianjun-Wang	端子图表 ==A01=FM4+-X1
APPROVED	Yongsheng.Li	CONTRACT NO.:
FIRST DATE	2025/4/28	504485024
REV. DATE		
DESCRIPTION		
REV.		

FUNCTION: 电机接变频器柜（带磁平衡）

PROJECT: 天津渤化永利丁辛醇项目

=	FM4	SHEET NO.	1
SCALE	1:1	TOTAL PAGES	13
DRAWING NO.	XZS1-48353-A01-FM4-T		

REV.	DESCRIPTION	REV. DATE

This drawing and information contained thereon is the property of ABB (XIAMEN) Switchgear CO. LTD. and shall not be used, reproduced for any purpose ,or shown to third parties without the written consent of ABB (XIAMEN) Switchgear CO. LTD.

==A01=FM4+-X2

备注	外引电缆	设备	线号	端子号	型号	线号	设备	外引电缆	备注
		-FCM20:4		1	NEK4		-QAB:11		
				2	NEK4		-QCE:BGE2/42		
				3	NEK4		-BR20:1		
				4	NEK4		-PMM:L+		
				5	NEK4		-PGW:12		
				6	NEK4		-SAM:P2/01		
				7	NEK4		-AT:3		
				8	NEK4		-BCG1:X1/c24		
				9	NEK4		-QAB:26		
	△	-仪表联跳		10	NEK4		-KFD1:9		
	△	-变频故障联跳		11	NEK4				
				12	NEK4		-SB3:13		
				13	NEK4				
				14	NEK4		-QAB:5		
				15	NEK4		-SFS32:11		
				16	NEK4		-SB1:13		
				17	NEK4		-XLP7:1		
				18	NEK4		-QAB:8		
				19	NEK4				
				20	NEK4		-FCM90:11		
				21	NEK4		-QAB:52		
				22	NEK4		-QCE:BGE2/40		
	△	-邻柜继保装置故障		23	NEK4				
				24	NEK4				
				25	NEK4				
				26	NEK4				
				27	NEK4				
				28	NEK4				
	△	-外部指示灯-公共端		29	NEK4		-FCM20:2		
				30	NEK4		-PFX2:1		
				31	NEK4		-BR20:2		
				32	NEK4		-PMM:N-		
				33	NEK4		-PGW:13		
				34	NEK4		-SAM:P2/03		
				35	NEK4		-AT:4		
				36	NEK4		-BCG1:X1/c28		
		-KFD1:6		37	NEK4		-BCG1:X1/c12		
		-KFD2:6		38	NEK4		-BCG1:X3/c32		
				39	NEK4				
				40	NEK4		-QAB:21		
	△	-外部指示灯-合闸指示		41	NEK4		-PFX2:3		
				42	NEK4		-QAB:22		
	△	-外部指示灯-分闸指示		43	NEK4		-PFX2:2		
		-QAB:51		44	NEK4		-PFX1:3		
		-QAB:50		45	NEK4		-PFX1:2		
		-QCE:BGE2/43		46	NEK4		-PFX3:3		
		-QCE:BGE3/23		47	NEK4		-PFX3:2		
		-QAB:36		48	NEK4		-BCG1:X1/a2		
	△	-仪表联跳		49	NEK4		-XLP5:1		
		-XLP5:2		50	NEK4		-KFD1:1		
		-KFD1:8		51	NEK4		-BCG1:X1/a4		
		-KFD2:8		52	NEK4		-BCG1:X1/a6		
	△	-变频故障联跳		53	NEK4		-XLP6:1		
		-XLP6:2		54	NEK4		-KFD2:1		

☆ 柜间小母线,随柜提供

△ 柜间控制电路(由客户自备)

短接排

✕ 分隔板

(测试短接片

O 其他

DRAWN	XINYU LIU
CHECKED	Jianjun-Wang
APPROVED	Yongsheng.Li
FIRST DATE	2025/4/28
REV. DATE	
REV.	
DESCRIPTION	

TITLE: 端子图表 ==A01=FM4+-X2

CONTRACT NO.: 504485024

FUNCTION: 电机接变频器柜（带磁平衡）

PROJECT: 天津渤化永利丁辛醇项目

=	FM4
SCALE	1:1
SHEET NO	2
TOTAL PAGES	13
DRAWING NO	XZS1-48353-A01-FM4-T

REV.	DESCRIPTION	REV. DATE

This drawing and information contained thereon is the property of ABB (XIAMEN) Switchgear CO. LTD. and shall not be used, reproduced for any purpose ,or shown to third parties without the written consent of ABB (XIAMEN) Switchgear CO. LTD.

==A01=FM4+-X2

备注	外引电缆	设备	线号	端子号	型号	线号	设备	外引电缆	备注
				55	NEK4		-BCG1:X1/a8		
				56	NEK4				
				57	NEK4		-BCG1:X1/a12		
		-QAB:15		58	NEK4		-BCG1:X1/c2		
		-QAB:18		59	NEK4		-BCG1:X3/a20		
				60	NEK4		-BCG1:X3/a22		
		-FCM10:11		61	RCT4SW		-FCM90:11		
		-FCM92:12		62	NEK4		-BCG1:X3/a24		
		-QAB:54		63	NEK4		-BCG1:X3/a26		
		-QAB:53		64	NEK4		-BCG1:X3/a28		
		-QCE:BGE2/41		65	NEK4		-BCG1:X3/a30		
		-QCE:BGE3/21		66	NEK4		-BCG1:X3/a32		
	△	-邻柜继保装置故障		67	NEK4		-BCG1:X3/c20		
				68	NEK4		-BCG1:X3/c22		
				69	NEK4		-BCG1:X3/c24		
				70	NEK4		-BCG1:X3/c26		
				71	NEK4		-BCG1:X3/c28		
				72	NEK4		-BCG1:X3/c30		

☆ 柜间小母线,随柜提供

△ 柜间控制电路(由客户自备)

短接排

分隔板

(测试短接片

O 其他

DRAWN	XINYU LIU
CHECKED	Jianjun-Wang
APPROVED	YongshengLi
FIRST DATE	2025/4/28
REV. DATE	
REV.	
DESCRIPTION	

TITLE: 端子图表 ==A01=FM4+-X2

CONTRACT NO.: 504485024

FUNCTION: 电机接变频器柜（带磁平衡）

PROJECT: 天津渤化永利丁辛醇项目

=	FM4
SCALE	1:1
DRAWING NO	XZS1-48353-A01-FM4-T
SHEET NO	2.a
TOTAL PAGES	13

REV.	DESCRIPTION	REV. DATE

This drawing and information contained thereon is the property of ABB (XIAMEN) Switchgear CO. LTD. and shall not be used, reproduced for any purpose ,or shown to third parties without the written consent of ABB (XIAMEN) Switchgear CO. LTD.

==A01=FM4+-X3

备注	外引电缆	设备	线号	端子号	型号	线号	设备	外引电缆	备注
				1	NEK4		-FCM30:4		
				2	NEK4				
				3	NEK4		-SFS32:15		
				4	NEK4		-RL10:+		
				5	NEK4		-SFS32:3		
	△	-现场操作柱分闸		6	NEK4				
	△	-紧急分闸		7	NEK4				
				8	NEK4		-BCG1:X2/c2		
				9	NEK4		-BCG1:X3/c4		
				10	NEK4		-BCG1:X3/c6		
				11	NEK4		-BCG1:X3/c8		
				12	NEK4				
				13	NEK4		-BCG1:X2/c10		
				14	NEK4		-PFV1:220V		
				15	NEK4		-QAB:55		
		-QAB:14		16	NEK4		-FCM30:2		
				17	NEK4		-QAB:30		
				18	NEK4		-BCG1:X2/c22		
				19	NEK4		-PFV1:0V		
				20	NEK4		-REL1:E2		
	△	-变频允许指示		21	NEK4				
				22	NEK4		-KFB1:A2		
	△	-工频允许指示		23	NEK4				
				24	NEK4		-QAB:49		
				25	NEK4		-X3:27		
				26	NEK4		-X3:41		
				27	NEK4		-X3:25		
				28	NEK4		-BCG1:X3/c2		
		-BCG1:X3/a2		29	NEK4		-QAB:10		
		-QAB:32		30	NEK4		-QAB:4		
				31	NEK4				
	△	-现场操作柱合闸		32	NEK4		-KFB1:13		
	△	-现场操作柱合闸		33	NEK4		-SFS32:16		
				34	NEK4				
				35	NEK4		-KFB1:14		
		-X3:40		36	NEK4		-QAB:58		
				37	NEK4				
	△	-现场操作柱合闸		38	NEK4		-KFB2:13		
		-SFS31:4		39	NEK4		-QAB:57		
		-BCG1:X2/c18		40	NEK4		-X3:36		
		-X3:26		41	NEK4		-BCG1:X2/a18		
				42	NEK4		-BCG1:X2/a20		
				43	NEK4		-SFS32:4		
		-QAB:42		44	NEK4		-BCG1:X2/a16		
				45	NEK4				
		-SFS31:2		46	NEK4		-BCG1:X2/c16		
				47	NEK4				
	△	-现场操作柱分闸		48	NEK4		-BCG1:X2/c14		
	△	-紧急分闸		49	NEK4				
				50	NEK4				
				51	NEK4		-BCG1:X2/c20		
		-BCG1:X2/c12		52	NEK4		-XLP1:2		
				53	NEK4		-XLP2:2		
				54	NEK4		-XLP3:2		

☆ 柜间小母线,随柜提供

△ 柜间控制电路(由客户自备)

短接排

✕ 分隔板

(测试短接片

O 其他

REV.	DESCRIPTION	REV. DATE

DRAWN	XINYU LIU	TITLE
CHECKED	Jianjun-Wang	
APPROVED	Yongsheng.Li	CONTRACT NO.:
FIRST DATE	2025/4/28	504485024

端子图表 ==A01=FM4+-X3

FUNCTION

PROJECT

电机接变频器柜（带磁平衡）

天津渤化永利丁辛醇项目

=	FM4	SHEET NO.	3
SCALE	1:1	TOTAL PAGES	13
DRAWING NO.	XZS1-48353-A01-FM4-T		

REV.	DESCRIPTION	REV. DATE

This drawing and information contained thereon is the property of ABB (XIAMEN) Switchgear CO. LTD. and shall not be used, reproduced for any purpose ,or shown to third parties without the written consent of ABB (XIAMEN) Switchgear CO. LTD.

==A01=FM4+-X3

备注	外引电缆	设备	线号	端子号	型号	线号	设备	外引电缆	备注
				●55	NEK4		-XLP4:2		
				●56	NEK4				
		-QAB:31		●57	NEK4		-BCG1:X2/a14		
				●58	NEK4		-BCG1:X2/a12		
				59	NEK4		-QAB:41		
		-PFV1:COM		60	NEK4		-REL1:E1		
	△	-变频允许指示		●61	NEK4				
	△	-变频合闸允许		●62	NEK4		-KFB1:A1		
	△	-允许开车		63	NEK4		-QAB:56		
	△	-允许开车		64	NEK4		-机旁加热器运行反馈	△	
	△	-变频合闸允许		●65	NEK4		-机旁加热器运行反馈	△	
	△	-工频合闸允许		●66	NEK4				
	△	-工频合闸允许		●67	NEK4		-KFB2:A1		
	△	-工频允许指示		●68	NEK4				

☆ 柜间小母线,随柜提供

△ 柜间控制电路(由客户自备)

短接排

✕ 分隔板

(测试短接片

O 其他

DRAWN	XINYU LIU
CHECKED	Jianjun-Wang
APPROVED	YongshengLi
FIRST DATE	2025/4/28
REV. DATE	
REV.	
DESCRIPTION	

TITLE: 端子图表 ==A01=FM4+-X3

CONTRACT NO.: 504485024

FUNCTION: 电机接变频器柜（带磁平衡）

PROJECT: 天津渤化永利丁辛醇项目

=	FM4
SCALE	1:1
DRAWING NO	XZS1-48353-A01-FM4-T
SHEET NO	3.a
TOTAL PAGES	13

REV.	DESCRIPTION	REV. DATE

This drawing and information contained thereon is the property of ABB (XIAMEN) Switchgear CO. LTD. and shall not be used, reproduced for any purpose ,or shown to third parties without the written consent of ABB (XIAMEN) Switchgear CO. LTD.

==A01=FM4+-X4

备注	外引电缆	设备	线号	端子号	型号	线号	设备	外引电缆	备注
		-BCT1:1S1		1	NEK6S		-PGW:1		
		-BCT1:1S2		2	NEK6S		-AT:2		
		-BCT2:1S1		3	NEK6S		-PMM:IB		
		-BCT2:1S2		4	NEK6S		-X4:28		
		-BCT3:1S1		5	NEK6S		-PGW:7		
		-BCT3:1S2		6	NEK6S		-X4:29		
		-GND		7	NEK6S				
		-BCT1:2S1		8	NEK6S		-BCG1:X6/a1		
		-BCT1:2S2		9	NEK6S		-BCG1:X6/b1		
		-BCT2:2S1		10	NEK6S		-BCG1:X6/a2		
		-BCT2:2S2		11	NEK6S		-BCG1:X6/b2		
		-BCT3:2S1		12	NEK6S		-BCG1:X6/a3		
		-BCT3:2S2		13	NEK6S		-BCG1:X6/b3		
		-GND		14	NEK6S				
		-BCN:S1		15	NEK6S		-BCG1:X6/a4		
		-BCN:S2		16	NEK6S		-综合选线装置	△	
		-GND		17	NEK6S				
	△	-磁平衡电流		18	NEK6S		-BCG1:X6/a12		
				19	NEK6S		-BCG1:X6/b12		
	△	-磁平衡电流		20	NEK6S		-BCG1:X7/a1		
				21	NEK6S		-BCG1:X7/b1		
	△	-磁平衡电流		22	NEK6S		-BCG1:X7/a2		
	△	-磁平衡电流		23	NEK6S		-BCG1:X7/b2		
		-GND		24	NEK6S				
		-PGW:3		25	NEK6S		-PMM:IA		
		-PGW:9		26	NEK6S		-PMM:IC		
		-BCG1:X6/b5		27	NEK6S		-AT:1		
		-BCG1:X6/b6		28	NEK6S		-X4:4		
		-BCG1:X6/b7		29	NEK6S		-X4:6		
		-BCG1:X6/b4		30	NEK6S		-综合选线装置	△	
				31	NEK6S				
				32	NEK6S				
				33	NEK6S				

☆ 柜间小母线,随柜提供

△ 柜间控制电路(由客户自备)

短接排

✕ 分隔板

(测试短接片

O 其他

DRAWN	XINYU LIU	TITLE	端子图表 ==A01=FM4+-X4
CHECKED	Jianjun-Wang		
APPROVED	Yongsheng.Li	CONTRACT NO.:	504485024
FIRST DATE	2025/4/28		
REV. DATE			
REV.	DESCRIPTION		

FUNCTION: 电机接变频器柜（带磁平衡）

PROJECT: 天津渤化永利丁辛醇项目

=	FM4	SHEET NO.	4
SCALE	1:1	TOTAL PAGES	13
DRAWING NO.	XZS1-48353-A01-FM4-T		

REV.	DESCRIPTION	REV. DATE

This drawing and information contained thereon is the property of ABB (XIAMEN) Switchgear CO. LTD. and shall not be used, reproduced for any purpose ,or shown to third parties without the written consent of ABB (XIAMEN) Switchgear CO. LTD.

==A01=FM4+-X5

备注	外引电缆	设备	线号	端子号	型号	线号	设备	外引电缆	备注
				1	NEK4		-KFC1:14		
				2	NEK4		-KFC1:11		
	△	-至DCS运行信号		3	NEK4		-QAB:9		
	△	-至DCS运行信号		4	NEK4		-QAB:19		
	△	-至变频器柜		5	NEK4		-QAB:28		
	△	-至变频器柜		6	NEK4		-QAB:38		
				7	NEK4		-QAB:29		
				8	NEK4		-QAB:39		
				9	NEK4		-QAB:27		
				10	NEK4		-QAB:37		
				11	NEK4		-QAB:2		
				12	NEK4		-QAB:3		
				13	NEK4		-QAB:13		
				14	NEK4		-QAB:6		
				15	NEK4		-QAB:16		
				16	NEK4		-QAB:7		
				17	NEK4		-QAB:17		
				18	NEK4		-QAB:48		
				19	NEK4		-QAB:12		
				20	NEK4		-QAB:47		
				21	NEK4		-QCE:BGE2/44		
				22	NEK4		-QCE:BGE2/45		
				23	NEK4		-QCE:BGE2/46		
				24	NEK4		-QCE:BGE2/47		
				25	NEK4		-QCE:BGE3/24		
				26	NEK4		-QCE:BGE3/25		
				27	NEK4		-QCE:BGE3/26		
				28	NEK4		-QCE:BGE3/27		
				29	NEK4		-SFS32:5		
				30	NEK4		-SFS32:6		
				31	NEK4		-SFS32:7		
				32	NEK4		-SFS32:8		
				33	NEK4		-FCM20:11		
				34	NEK4		-FCM20:12		
				35	NEK4		-SAM:P1/03		
				36	NEK4		-SAM:P1/04		
	△	-DCS		37	NEK4		-KFB1:43		
	△	-DCS		38	NEK4		-KFB1:44		
	△	-变频器		39	NEK4		-KFB1:33		
	△	-变频器		40	NEK4		-KFB1:34		
	△	-DCS		41	NEK4		-KFB2:33		
	△	-DCS		42	NEK4		-KFB2:34		
				43	NEK4		-BCG1:X2/c28		
				44	NEK4		-BCG1:X2/c32		
				45	NEK4		-BCG1:X2/c30		
				46	NEK4		-BCG1:X1/a22		
				47	NEK4		-BCG1:X1/a20		
				48	NEK4		-BCG1:X1/a18		
	△	-至邻柜继保BI		49	NEK4		-BCG1:X1/a14		
	△	-至邻柜继保BI		50	NEK4		-BCG1:X1/a16		
				51	NEK4		-XLP9:1		
				52	NEK4		-BCG1:X2/a6		
				53	NEK4		-BCG1:X2/a4		
				54	NEK4		-BR20:4		

☆ 柜间小母线,随柜提供

△ 柜间控制电路(由客户自备)

短接排

✕ 分隔板

(测试短接片

O 其他

REV.	DESCRIPTION	REV. DATE	
	DRAWN	XINYU LIU	TITLE
	CHECKED	Jianjun-Wang	端子图表 ==A01=FM4+-X5
	APPROVED	Yongsheng.Li	CONTRACT NO.:
	FIRST DATE	2025/4/28	504485024

FUNCTION: 电机接变频器柜（带磁平衡）

PROJECT: 天津渤化永利丁辛醇项目

= FM4 | SCALE 1:1 | SHEET NO. 5 | TOTAL PAGES 13

DRAWING NO. XZS1-48353-A01-FM4-T

REV.	DESCRIPTION	REV. DATE

This drawing and information contained thereon is the property of ABB (XIAMEN) Switchgear CO. LTD. and shall not be used, reproduced for any purpose ,or shown to third parties without the written consent of ABB (XIAMEN) Switchgear CO. LTD.

==A01=FM4+-X5

备注	外引电缆	设备	线号	端子号	型号	线号	设备	外引电缆	备注
				●55	NEK4		-BR25:V+		
				×56	NEK4		-BR20:5		
				●57	NEK4		-BR25:V-		
				×58	NEK4				
				59	NEK4				
				60	NEK4				
				61	NEK4				
				62	NEK4				
				63	NEK4				
				64	NEK4				
				65	NEK4				
				66	NEK4				
				67	NEK4				

☆ 柜间小母线,随柜提供

△ 柜间控制电路(由客户自备)

短接排

× 分隔板

(测试短接片

O 其他

REV.	DESCRIPTION	REV. DATE	
			DRAWN XINYU LIU
			CHECKED Jianjun-Wang
			APPROVED Yongsheng.Li
			FIRST DATE 2025/4/28

TITLE 端子图表 ==A01=FM4+-X5

CONTRACT NO.: 504485024

FUNCTION 电机接变频器柜（带磁平衡）

PROJECT 天津渤化永利丁辛醇项目

= FM4

SCALE 1:1

SHEET NO. 5.a

TOTAL PAGES 13

DRAWING NO. XZS1-48353-A01-FM4-T

REV.	DESCRIPTION	REV. DATE

This drawing and information contained thereon is the property of ABB (XIAMEN) Switchgear CO. LTD. and shall not be used, reproduced for any purpose ,or shown to third parties without the written consent of ABB (XIAMEN) Switchgear CO. LTD.

==A01=FM4+-X6

备注	外引电缆	设备	线号	端子号	型号	线号	设备	外引电缆	备注
		-FCM65:2		1	NEK4		-BCG1:X6/a8		
		-FCM65:4		2	NEK4		-BCG1:X6/a9		
		-FCM65:6		3	NEK4		-BCG1:X6/a10		
		-X13:4		4	NEK4		-BCG1:X6/b8		
		-FCM66:2		5	NEK4		-PMM:UA		
				6	NEK4		-PGW:2		
		-FCM66:4		7	NEK4		-PMM:UB		
				8	NEK4		-PGW:5		
		-FCM66:6		9	NEK4		-PMM:UC		
				10	NEK4		-PGW:8		
		-X13:10		11	NEK4		-PMM:UN		

☆ 柜间小母线,随柜提供

△ 柜间控制电路(由客户自备)

短接排

分隔板

(测试短接片

O 其他

DRAWN	XINYU LIU	TITLE
CHECKED	Jianjun-Wang	端子图表 ==A01=FM4+-X6
APPROVED	Yongsheng.Li	CONTRACT NO.:
FIRST DATE	2025/4/28	504485024
REV. DATE		
REV.	DESCRIPTION	

FUNCTION: 电机接变频器柜（带磁平衡）

PROJECT: 天津渤化永利丁辛醇项目

=	FM4	SHEET NO.	6
SCALE	1:1	TOTAL PAGES	13
DRAWING NO.	XZS1-48353-A01-FM4-T		

REV.	DESCRIPTION	REV. DATE

This drawing and information contained thereon is the property of ABB (XIAMEN) Switchgear CO. LTD. and shall not be used, reproduced for any purpose ,or shown to third parties without the written consent of ABB (XIAMEN) Switchgear CO. LTD.

==A01=FM4+-X9

备注	外引电缆	设备	线号	端子号	型号	线号	设备	外引电缆	备注
				● 1	NEK4		-EB2:1		
				● 2	NEK4		-SB2:13		
		-FCM90:2		● 3	NEK4		-BGD1:1		
		-FCM92:3		● 4	NEK4		-EB2:2		
				● 5	NEK4		-EA2:A2		
		-X11:4		● 6	NEK4		-EA1:A2		
		-SB2:14		7	NEK4		-EA2:A1		
		-EA1:A1		8	RCT4SW		-BGD1:2		
				● 9	NEK4		-X9:11		
		-FCM92:2		● 10	NEK4		-KM1:1		
		-X9:9		11	NEK4		-QAB:23		
		-QAB:33		12	NEK4		-KM1:A1		
	△	-电机加热器		13	NEK4		-KM1:2		
	△	-电机加热器		14	NEK4		-KM1:4		

☆ 柜间小母线,随柜提供

△ 柜间控制电路(由客户自备)

短接排

✕ 分隔板

(测试短接片

O 其他

DRAWN	XINYU LIU
CHECKED	Jianjun-Wang
APPROVED	Yongsheng.Li
FIRST DATE	2025/4/28
REV. DATE	
REV.	
DESCRIPTION	

TITLE: 端子图表 ==A01=FM4+-X9

CONTRACT NO.: 504485024

FUNCTION: 电机接变频器柜（带磁平衡）

PROJECT: 天津渤化永利丁辛醇项目

=	FM4
SCALE	1:1
DRAWING NO.	XZS1-48353-A01-FM4-T
SHEET NO.	7
TOTAL PAGES	13

REV.	DESCRIPTION	REV. DATE

This drawing and information contained thereon is the property of ABB (XIAMEN) Switchgear CO. LTD. and shall not be used, reproduced for any purpose ,or shown to third parties without the written consent of ABB (XIAMEN) Switchgear CO. LTD.

==A01=FM4+-X11

备注	外引电缆	设备	线号	端子号	型号	线号	设备	外引电缆	备注
6黑色	☆	-X11.2:1		1	A3C 6		-FCM90:1		
6黑色	☆	-X11.1:1							
6黑色	☆	-X11.2:2		2	A3C 6				
6黑色	☆	-X11.1:2							
6黑色	☆	-X11.2:3		3	A3C 6				
6黑色	☆	-X11.1:3							
6黑色	☆	-X11.2:4		4	A3C 6		-X9:6		
6黑色	☆	-X11.1:4							
6黑色	☆	-X11.2:5		5	A3C 6		-FCM10:3		
6黑色	☆	-X11.1:5							
6黑色	☆	-X11.2:6		6	A3C 6		-FCM10:1		
6黑色	☆	-X11.1:6							
6黑色	☆	-X11.2:7		7	A3C 6		-FCM30:3		
6黑色	☆	-X11.1:7							
6黑色	☆	-X11.2:8		8	A3C 6		-FCM30:1		
6黑色	☆	-X11.1:8							

☆ 柜间小母线,随柜提供

△ 柜间控制电路(由客户自备)

短接排

分隔板

(测试短接片

O 其他

REV.	DESCRIPTION	REV. DATE

DRAWN XINYU LIU
CHECKED Jianjun-Wang
APPROVED Yongsheng.Li
FIRST DATE 2025/4/28

TITLE 端子图表 ==A01=FM4+-X11

CONTRACT NO.: 504485024

FUNCTION 电机接变频器柜（带磁平衡）

PROJECT 天津渤化永利丁辛醇项目

= FM4

SCALE 1:1

SHEET NO. 8

TOTAL PAGES 13

DRAWING NO. XZS1-48353-A01-FM4-T

REV.	DESCRIPTION	REV. DATE

This drawing and information contained thereon is the property of ABB (XIAMEN) Switchgear CO. LTD. and shall not be used, reproduced for any purpose ,or shown to third parties without the written consent of ABB (XIAMEN) Switchgear CO. LTD.

==A01=FM4+-X13

备注	外引电缆	设备	线号	端子号	型号	线号	设备	外引电缆	备注
	☆	-X13.1:1		1	A4C 4		-FCM65:1		
	☆	-X13.2:1							
	☆	-X13.1:2		2	A4C 4		-FCM65:3		
	☆	-X13.2:2							
	☆	-X13.1:3		3	A4C 4		-FCM65:5		
	☆	-X13.2:3							
	☆	-X13.1:4		4	A4C 4		-X6:4		
	☆	-X13.2:4							
	☆	-X13.1:5		5	A4C 4				
	☆	-X13.2:5							
	☆	-X13.1:6		6	A4C 4				
	☆	-X13.2:6							
	☆	-X13.3:7		7	A4C 4		-FCM66:1		
	☆	-X13.4:7							
	☆	-X13.3:8		8	A4C 4		-FCM66:3		
	☆	-X13.4:8							
	☆	-X13.3:9		9	A4C 4		-FCM66:5		
	☆	-X13.4:9							
	☆	-X13.3:10		10	A4C 4		-X6:11		
	☆	-X13.4:10							

☆ 柜间小母线,随柜提供

△ 柜间控制电路(由客户自备)

短接排

✕ 分隔板

(测试短接片

O 其他

DRAWN	XINYU LIU	TITLE
CHECKED	Jianjun-Wang	端子图表 ==A01=FM4+-X13
APPROVED	Yongsheng.Li	CONTRACT NO.:
FIRST DATE	2025/4/28	504485024
REV. DATE		
DESCRIPTION		
REV.		

FUNCTION: 电机接变频器柜（带磁平衡）

PROJECT: 天津渤化永利丁辛醇项目

=	FM4	SHEET NO.	9
SCALE	1:1	TOTAL PAGES	13
DRAWING NO.	XZS1-48353-A01-FM4-T		

REV.	DESCRIPTION	REV. DATE

This drawing and information contained thereon is the property of ABB (XIAMEN) Switchgear CO. LTD. and shall not be used, reproduced for any purpose ,or shown to third parties without the written consent of ABB (XIAMEN) Switchgear CO. LTD.

==A01=FM4+-X14

备注	外引电缆	设备	线号	端子号	型号	线号	设备	外引电缆	备注
	☆	-X14:2		1	NEK4		-BR20:10		
	☆	-X14:1		2	NEK4				
	☆	-X14:4		3	NEK4		-BR20:9		
	☆	-X14:3		4	NEK4				
	☆	-X14:6		5	NEK4		-ST1		
	☆	-X14:5		6	NEK4				
	☆	-X14:8		7	NEK4		-PGW:25		
	☆	-X14:7		8	NEK4				
	☆	-X14:10		9	NEK4		-PGW:26		
	☆	-X14:9		10	NEK4				
	☆	-X14:12		11	NEK4		-ST1		
	☆	-X14:11		12	NEK4				
				13	NEK4		-BCG1:X4/1		
				14	NEK4		-BCG1:X4/2		
				15	NEK4		-BCG1:X4/3		
				16	NEK4		-SAM:P1/01		
				17	NEK4		-SAM:P1/02		
				18	NEK4		-PMM:A		
				19	NEK4		-PMM:B		
				20	NEK4		-PMM:S		
				21	NEK4		-BR20:7		
				22	NEK4		-BR25:A		
				23	NEK4		-BR20:6		屏蔽双绞线
				24	NEK4		-BR25:B		
	△	-至DCS4~20mA电流引出		25	NEK4		-AT:5		
	△	-至DCS4~20mA电流引出		26	NEK4		-AT:6		

☆ 柜间小母线,随柜提供

△ 柜间控制电路(由客户自备)

短接排

✕ 分隔板

(测试短接片

O 其他

REV.	DESCRIPTION	REV. DATE

DRAWN XINYU LIU
CHECKED Jianjun-Wang
APPROVED Yongsheng.Li
FIRST DATE 2025/4/28

TITLE 端子图表 ==A01=FM4+-X14

CONTRACT NO.: 504485024

FUNCTION 电机接变频器柜（带磁平衡）

PROJECT 天津渤化永利丁辛醇项目

= FM4

SCALE 1:1

SHEET NO. 10

TOTAL PAGES 13

DRAWING NO. XZS1-48353-A01-FM4-T