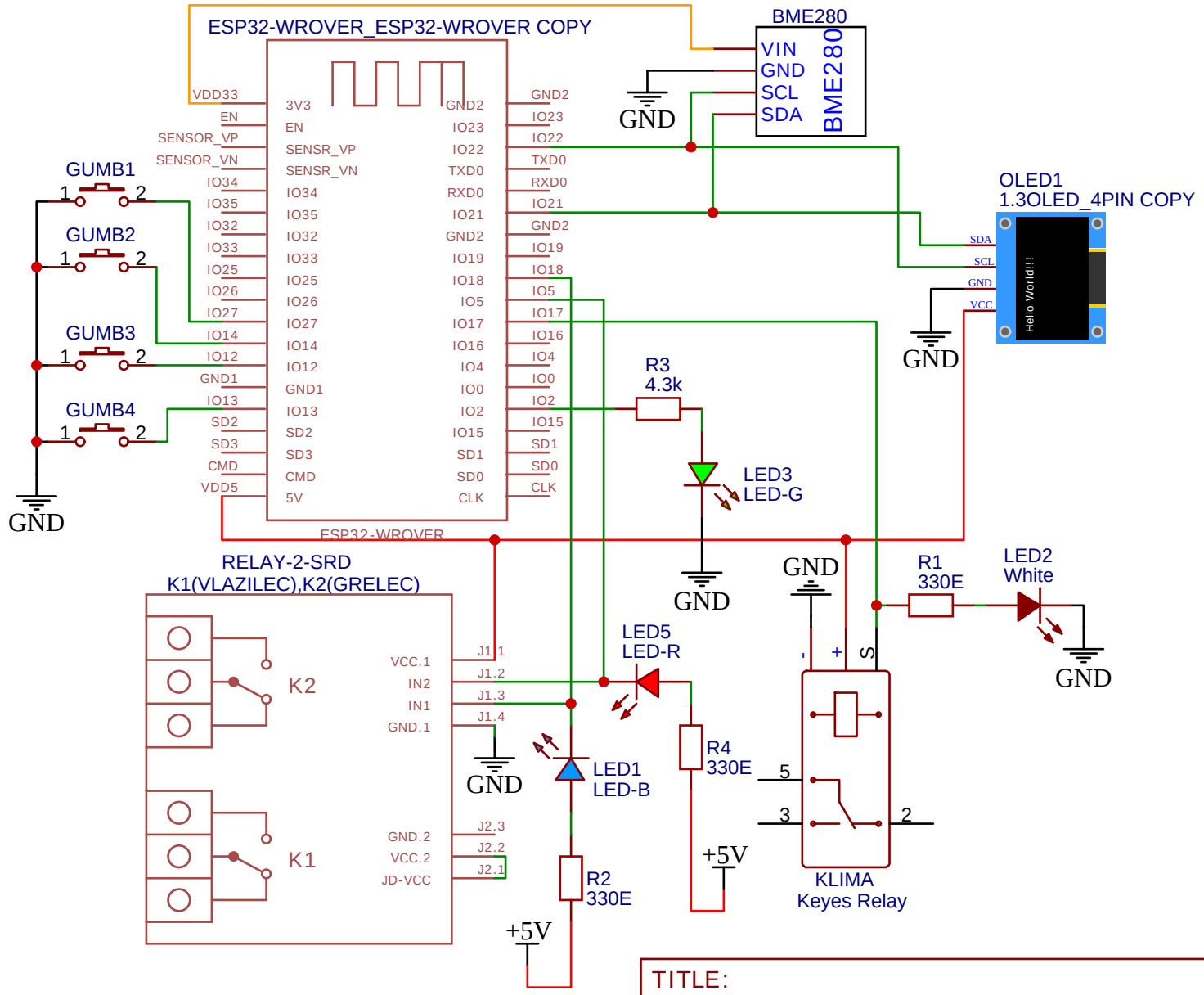

TITLE:

Avtonomni sistem za zagotovitev vlaznosti in temperature za gojenje gob

REV: 1.0

Company: STPS

Sheet: 1/1

Date: 2023-11-05

Drawn By: Andraz Hribar