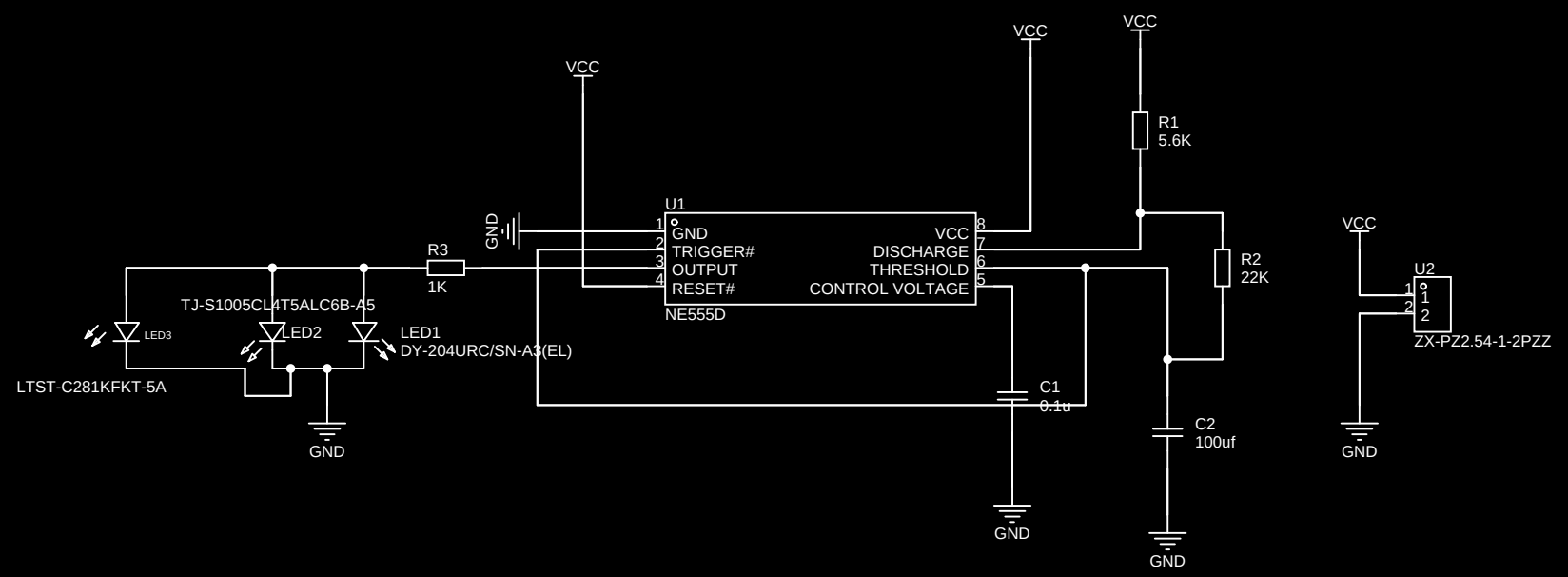

Schematic	Schematic1	Update Date	2024-10-11
		Create Date	2024-10-11
Page	P1	Part Number	JLCPCB-002
Drawn	EasyEDA	halloween	
Reviewed	EasyEDA		
		VER	SIZE	PAGE 1 OF 1
EasyEDA		V0.1	A4	EasyEDA.com