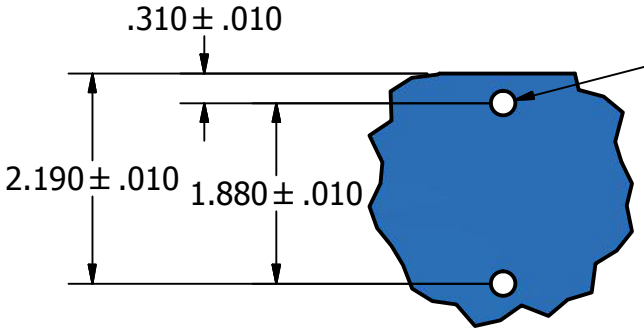

These bolt holes are for 1/4-20 through holes for the McMaster cylinder supports. They should be 0.266 +/- 0.010 - but I can't seem to make Inventor understand that.

DETAIL A
SCALE 1 / 2

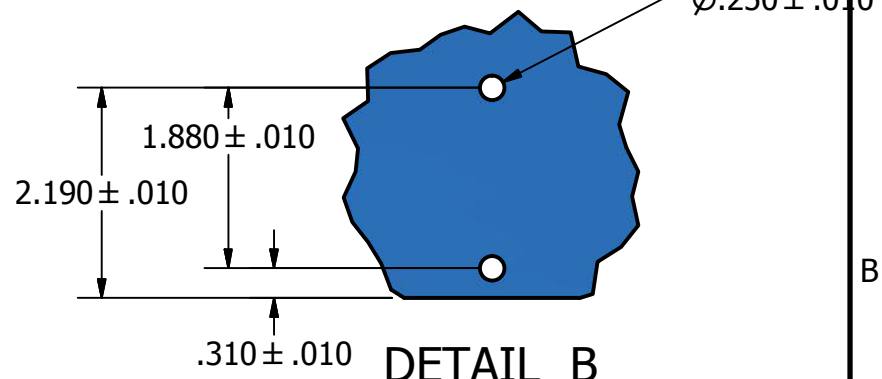

DETAIL B
SCALE 1 / 2

.250 ± .010

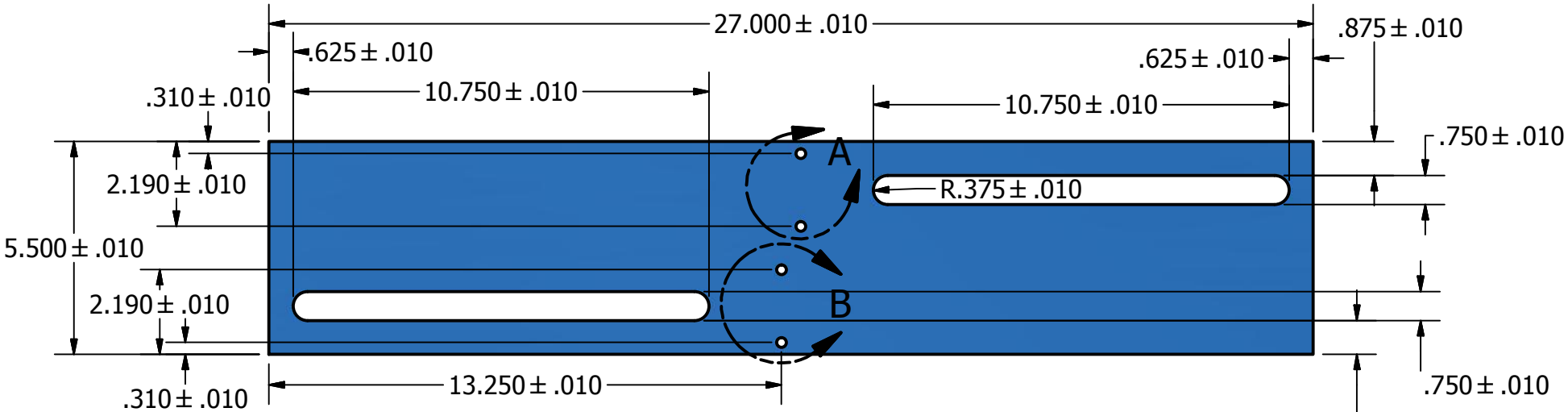

All radius of the outside edges of the slots are the same.