PARTS LIST		
ITEM	QTY	PART NUMBER
1	1	AM14U5_LONG_TOUGHBOX_MINI_6IN_H_ASM
2	1	02_2022_EVERYBOT_ARM_TOP_ASSY_ASM
3	1	03_2022_EVERYBOT_CLIMB_ASSY_ASM
4	1	05_CONTROLS_ASM
5	1	02_2022_EVERYBOT_BUMPERS_ASM

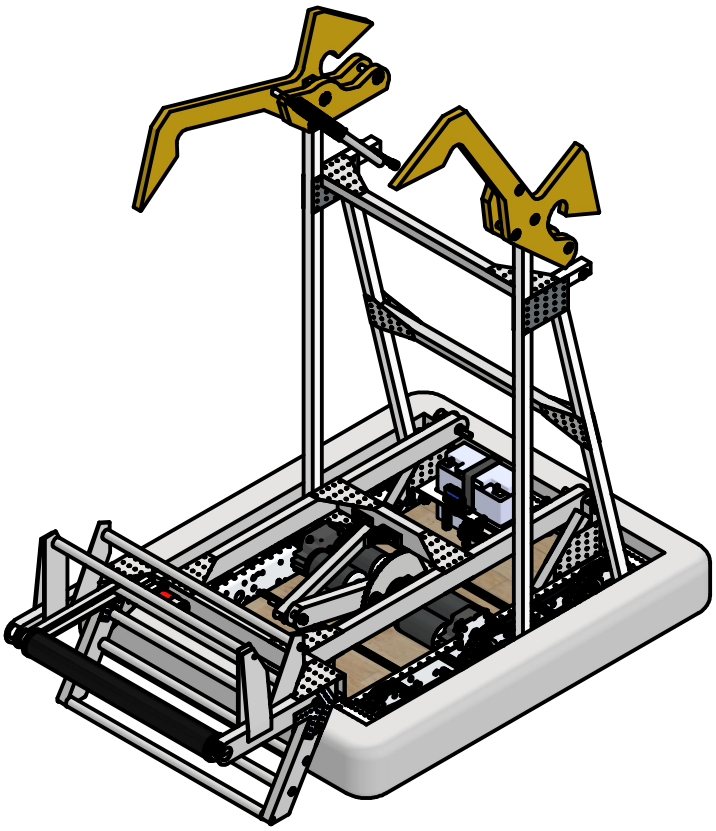

DRAWN robst	1/21/2022				
CHECKED		TITLE			
QA					
MFG					
APPROVED					
		SIZE A		DWG NO 00_2022_everybot_asm	REV
		SCALE 1 / 15			SHEET 1 OF 28

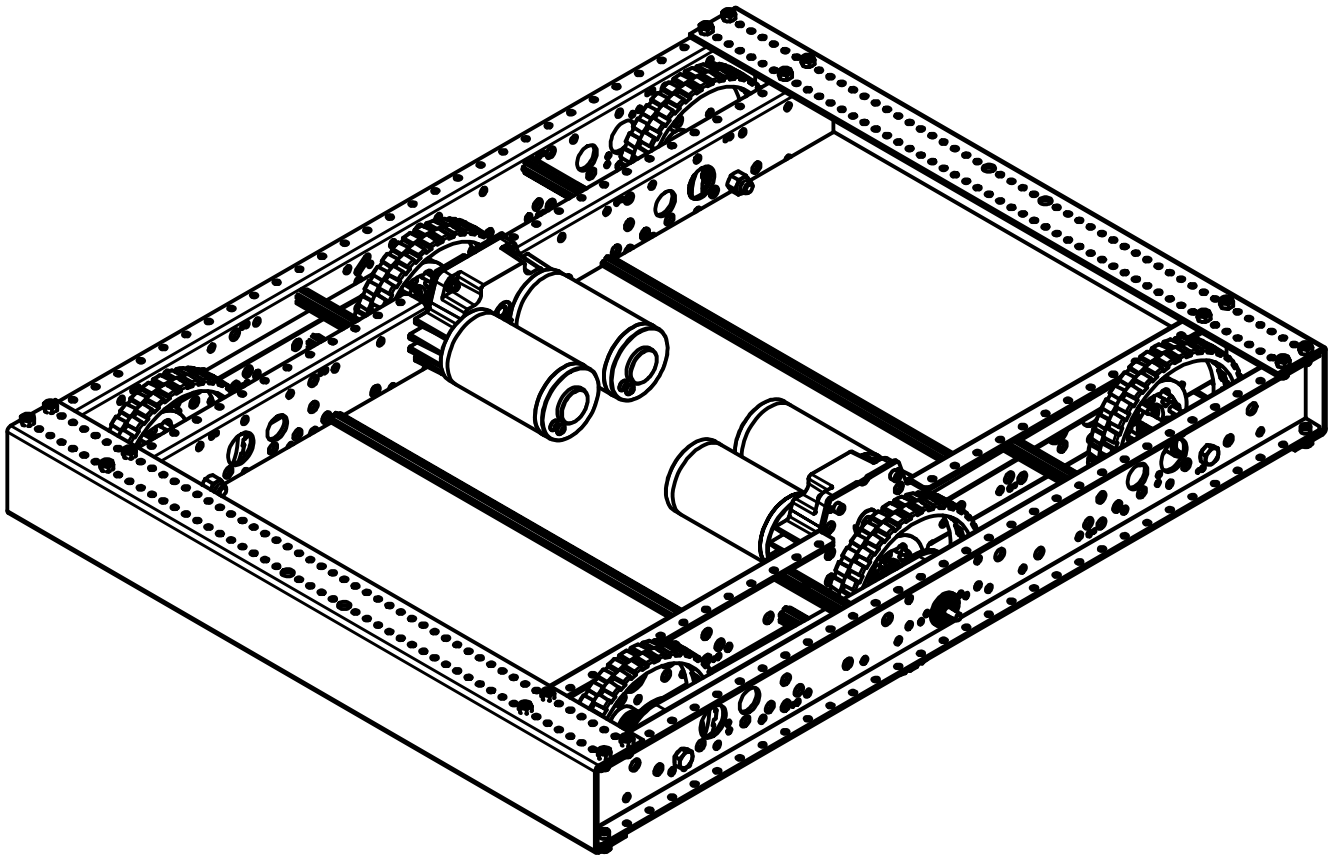

DRAWN robst	1/21/2022				
CHECKED		TITLE			
QA					
MFG					
APPROVED					
		SIZE A		DWG NO 00_2022_everybot_asm	REV
		SCALE 1 / 6			SHEET 2 OF 28

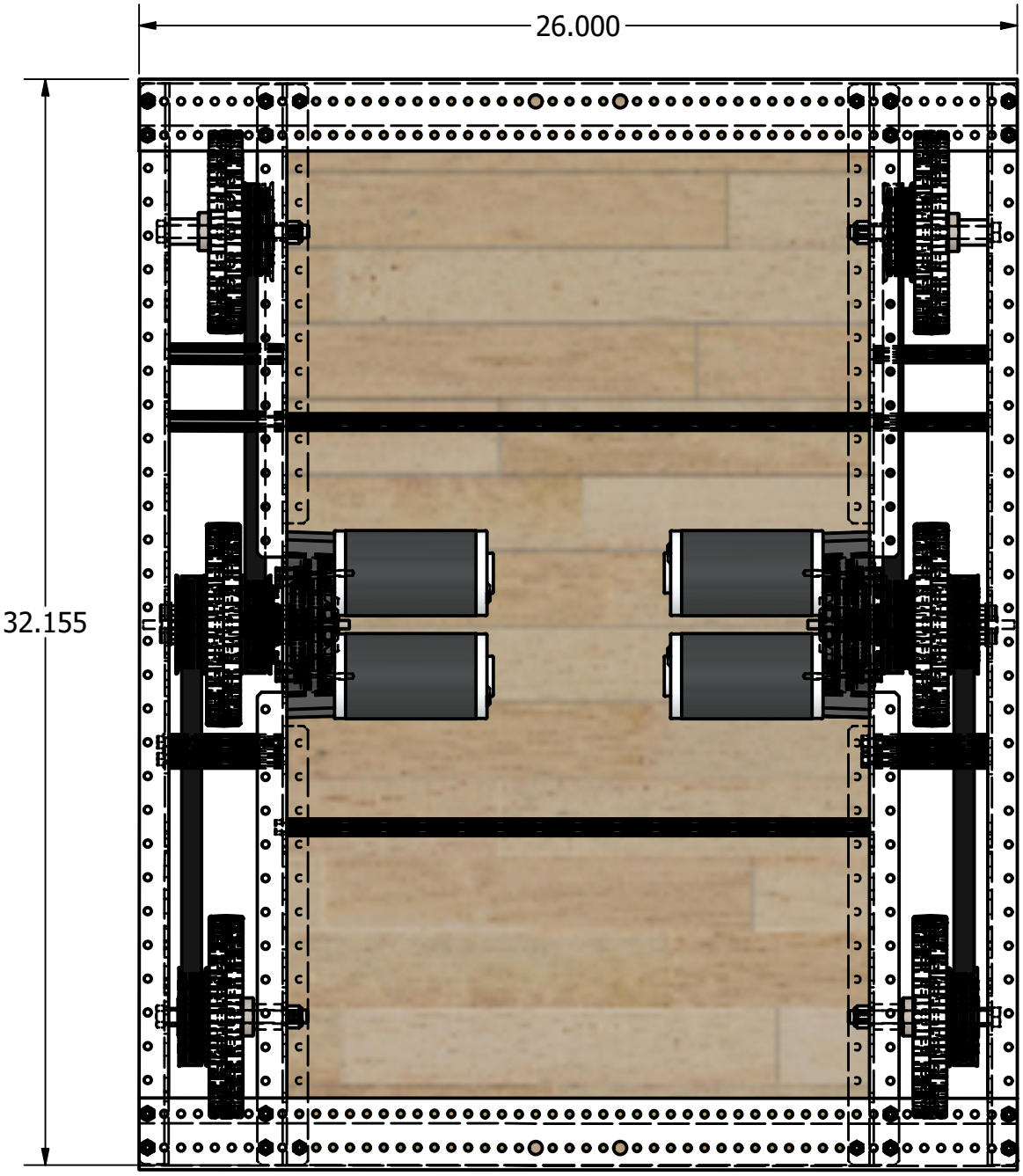

DRAWN robst	1/21/2022	
CHECKED		TITLE
QA		
MFG		
APPROVED		

SIZE		DWG NO	REV
A		00_2022_everybot_asm	
SCALE 1 / 5		SHEET 3 OF 28	

Arm with Ball Pickup and Delivery

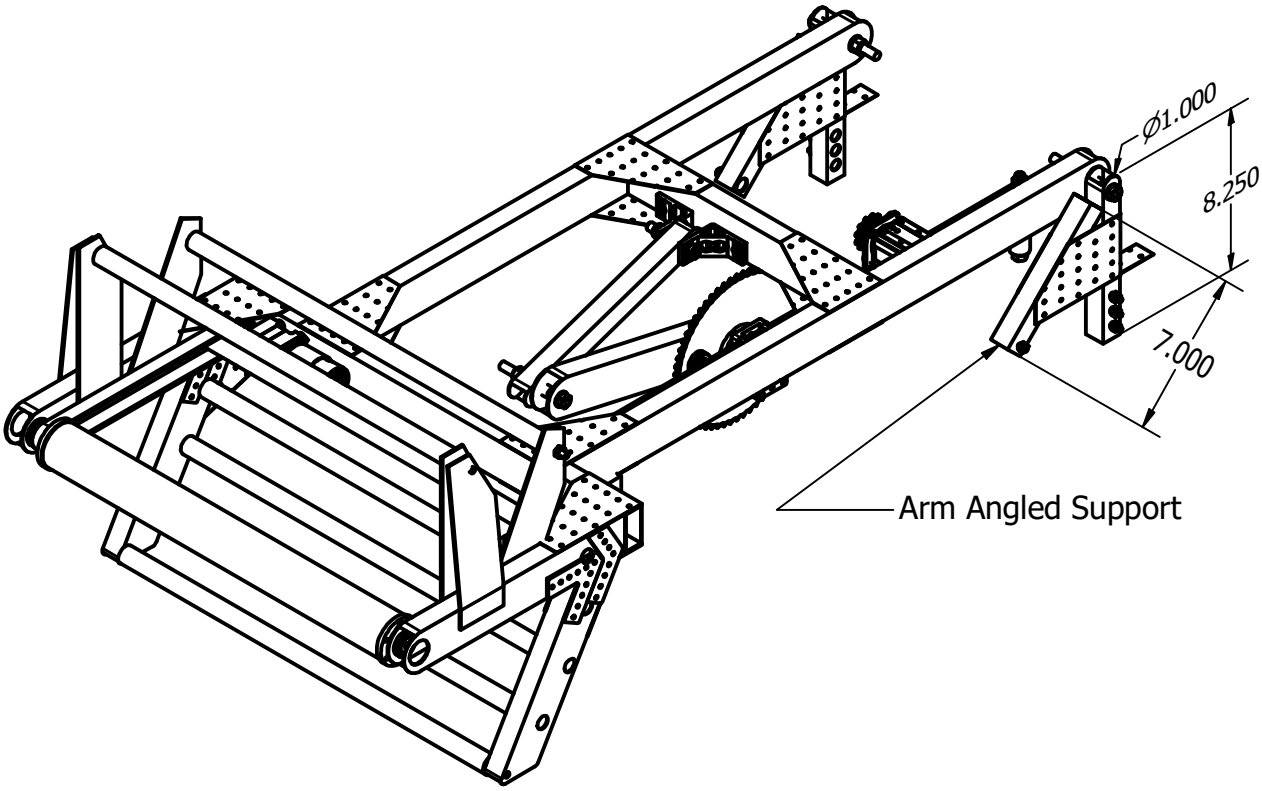

DRAWN robst	1/21/2022				
CHECKED		TITLE			
QA					
MFG					
APPROVED					
		SIZE A		DWG NO 00_2022_everybot_asm	REV
		SCALE 1 / 8			SHEET 4 OF 28

Arm Intake

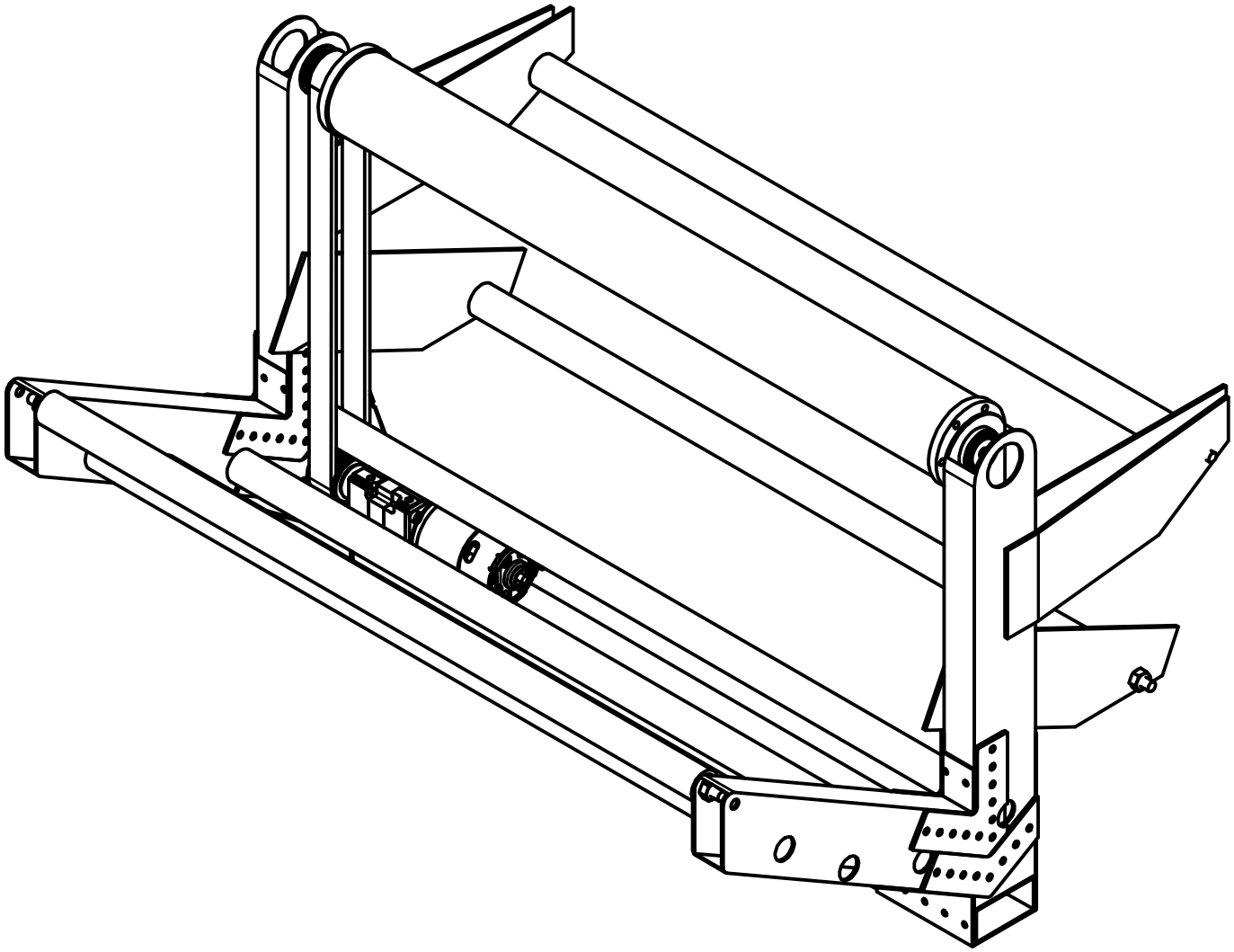

DRAWN robst	1/21/2022				
CHECKED		TITLE			
QA					
MFG					
APPROVED					
		SIZE A		DWG NO 00_2022_everybot_asm	REV
		SCALE 1 / 4			SHEET 5 OF 28

Arm Intake PVC Bar Assembly

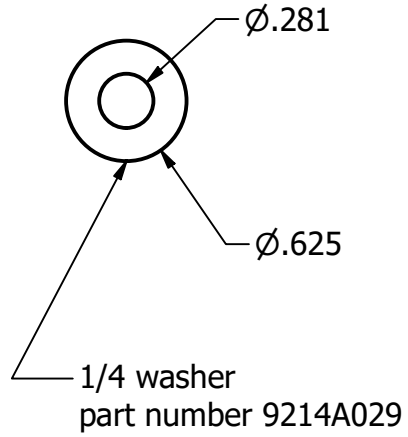

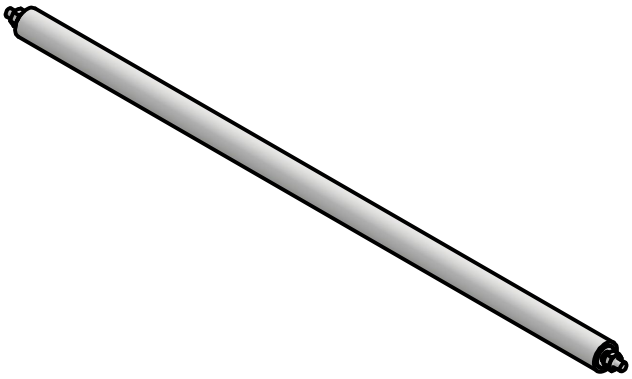

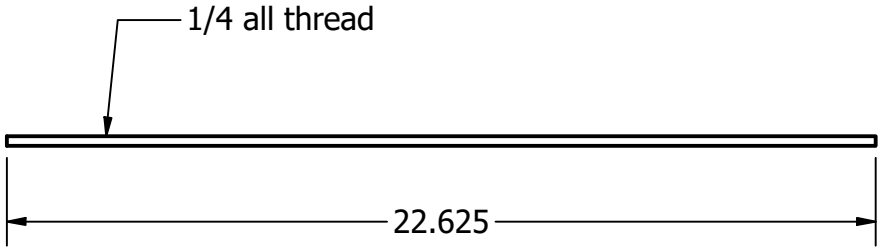

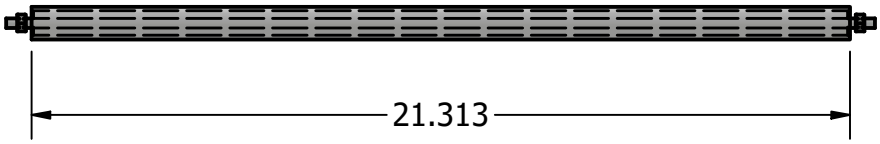

DRAWN robst	1/21/2022				
CHECKED		TITLE			
QA					
MFG					
APPROVED					
		SIZE A		DWG NO 00_2022_everybot_asm	REV
		SCALE 1/5			SHEET 6 OF 28

Main Arm Assembly

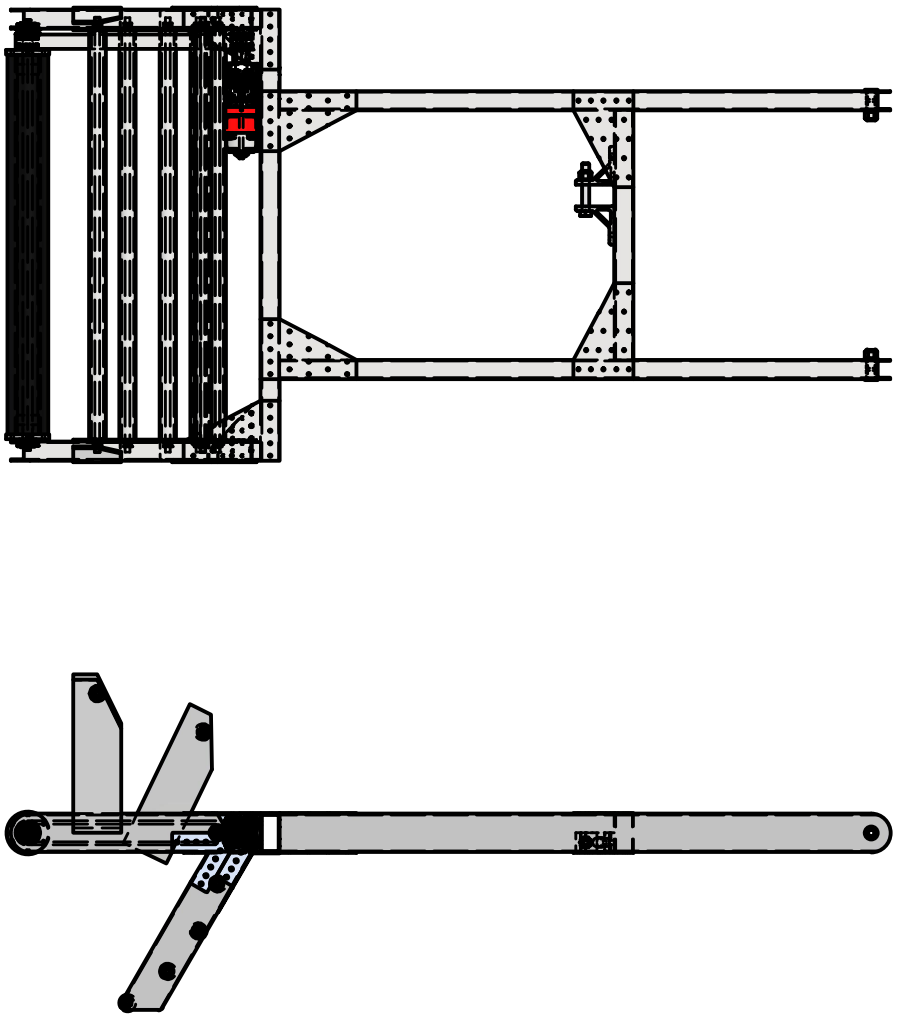

DRAWN robst	1/21/2022				
CHECKED		TITLE			
QA					
MFG					
APPROVED					
		SIZE A		DWG NO 00_2022_everybot_asm	REV
		SCALE 1 / 10			SHEET 7 OF 28

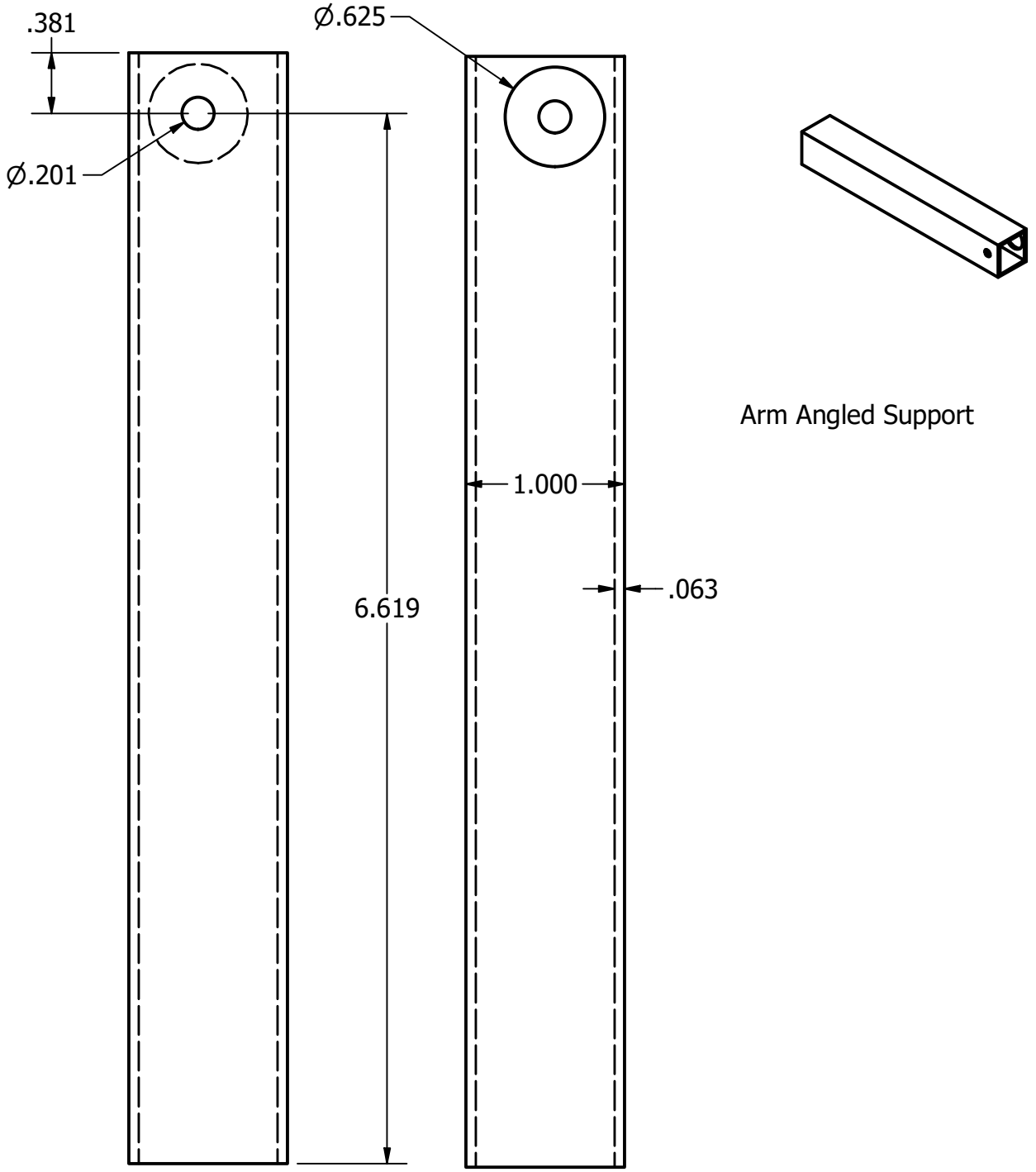

DRAWN robst	1/21/2022				
CHECKED		TITLE			
QA					
MFG					
APPROVED					
		SIZE A		DWG NO 00_2022_everybot_asm	REV
		SCALE 1 : 1		SHEET 8 OF 28	

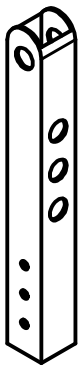

Arm Master Pivot

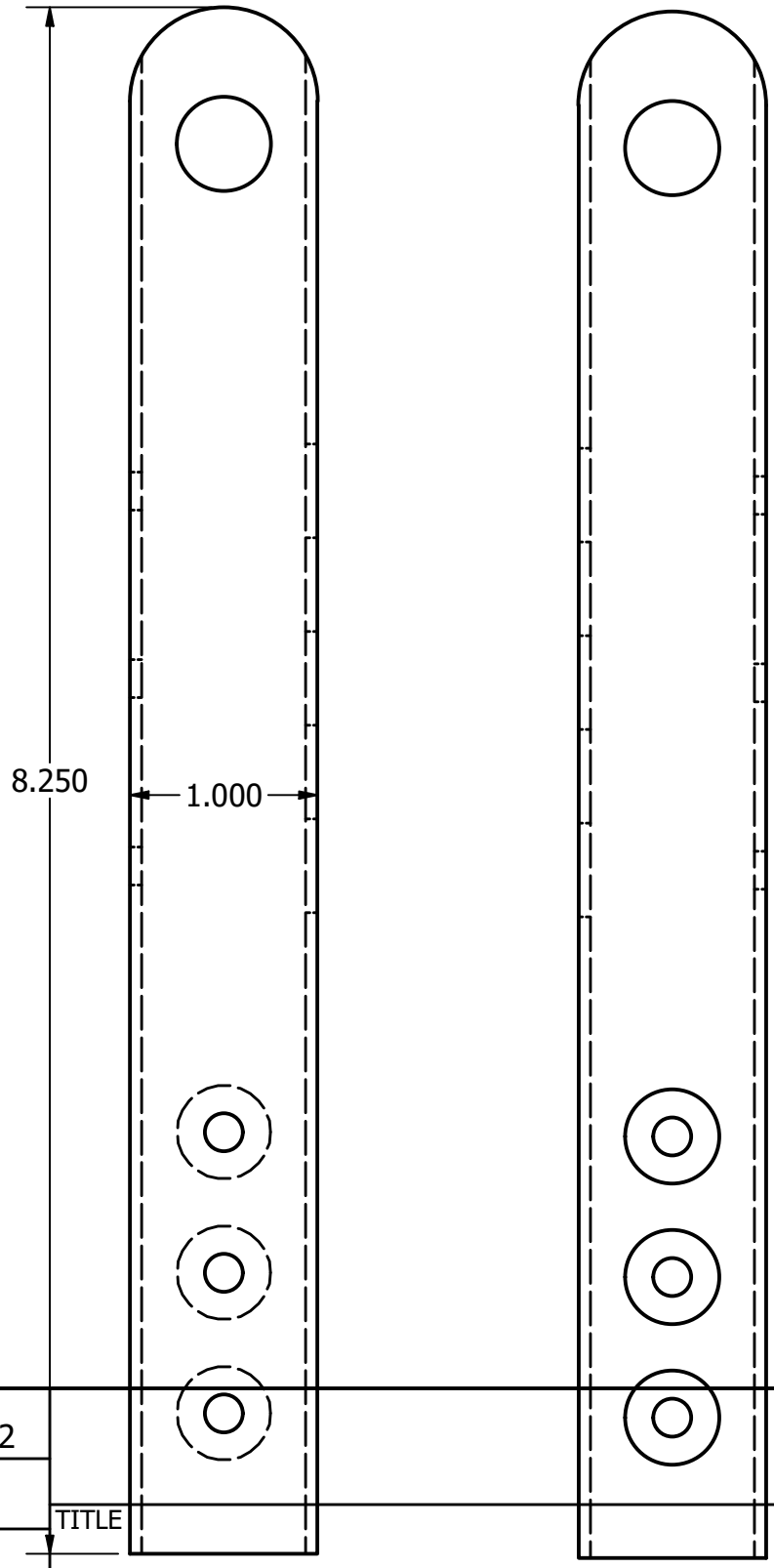

DRAWN robst	1/21/2022	TITLE		
CHECKED				
QA				
MFG				
APPROVED				
		SIZE A	DWG NO 00_2022_everybot_asm	REV
		SCALE 1 : 1		SHEET 9 OF 28

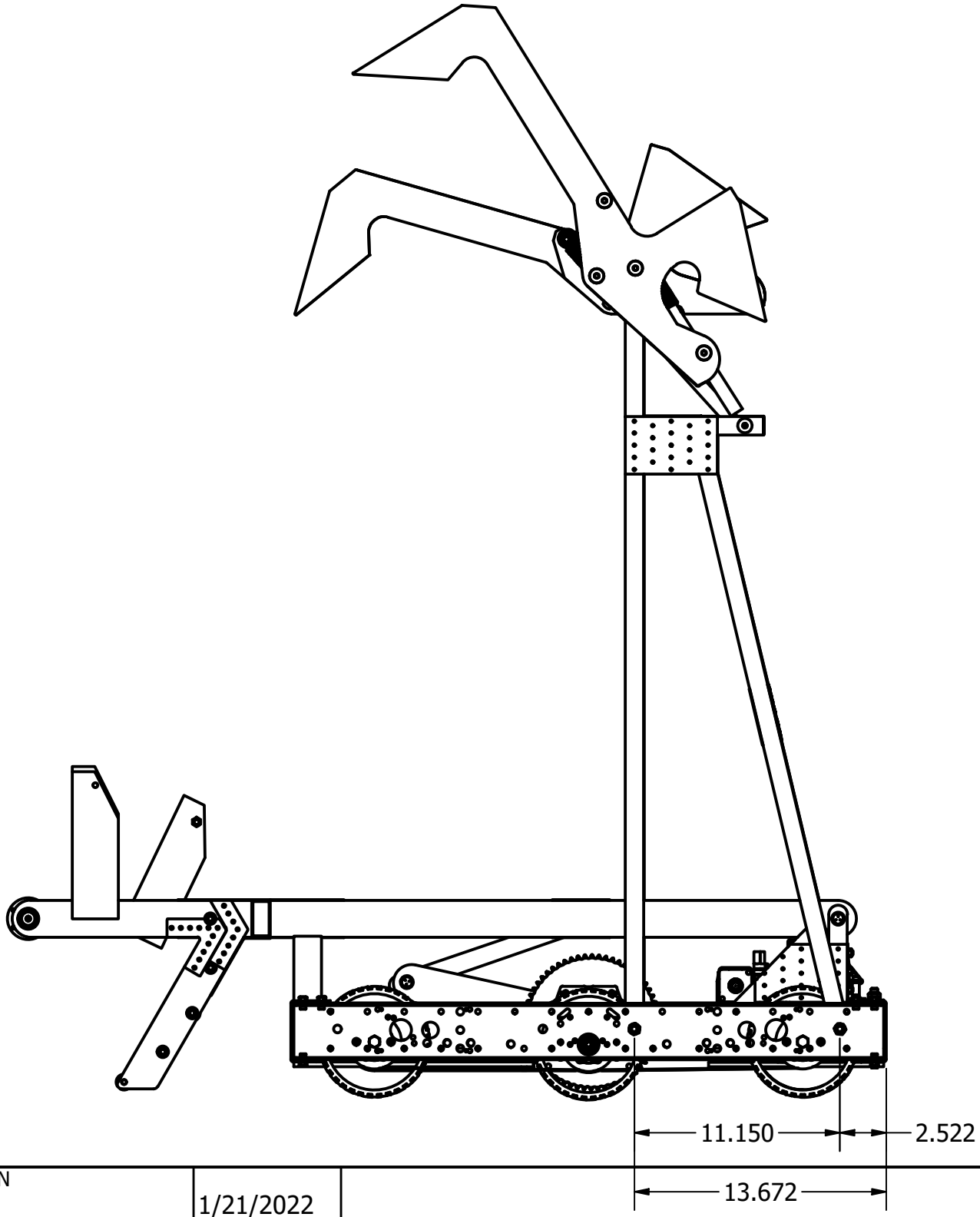

DRAWN robst	1/21/2022				
CHECKED		TITLE			
QA					
MFG					
APPROVED					
		SIZE A		DWG NO 00_2022_everybot_asm	REV
		SCALE 1 / 8			SHEET 10 OF 28

Climber Frame and Grabber Assembly

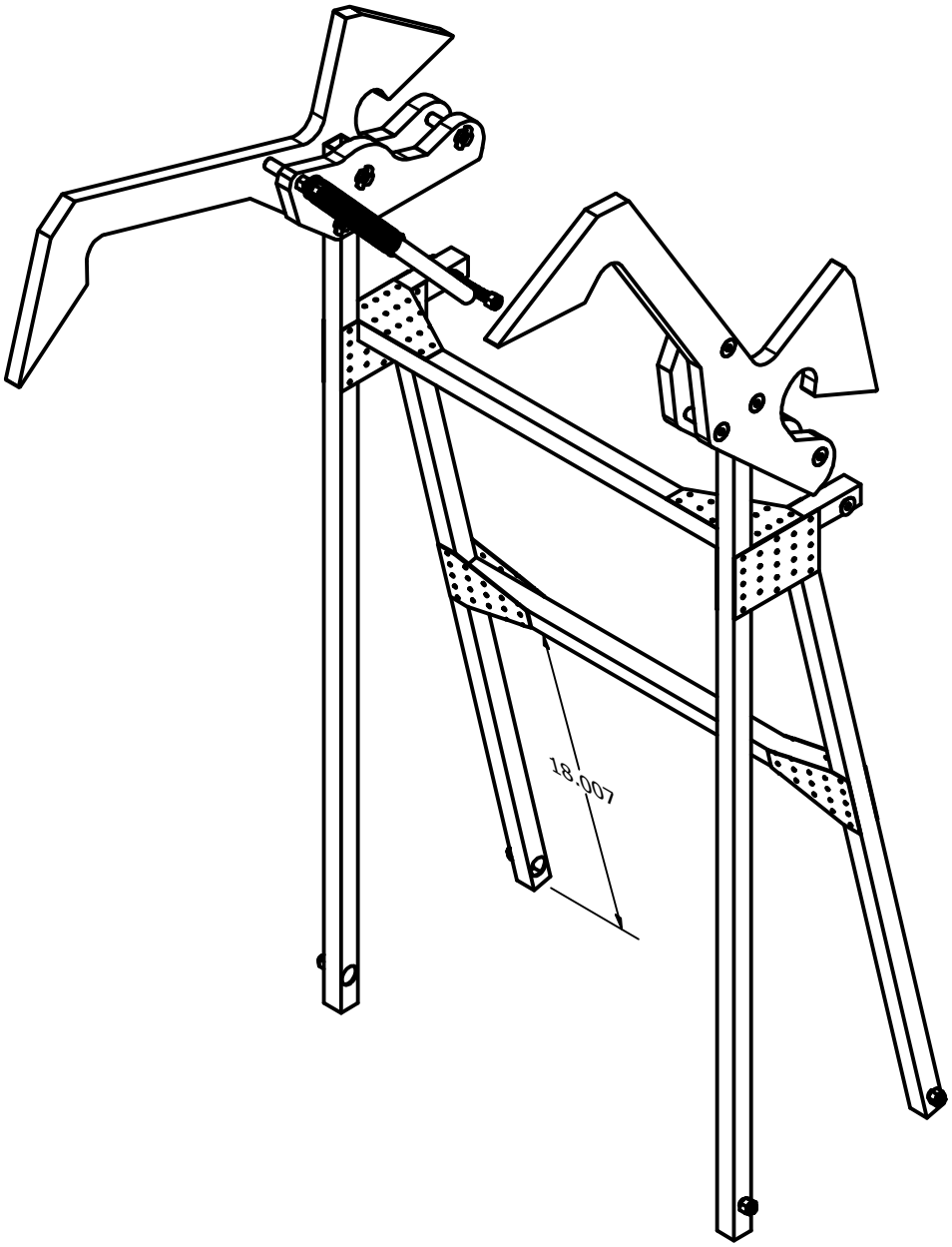

DRAWN robst	1/21/2022				
CHECKED		TITLE			
QA					
MFG					
APPROVED					
		SIZE A		DWG NO 00_2022_everybot_asm	REV
		SCALE 1 / 8			SHEET 11 OF 28

Climber Frame and Grabber Assembly
Front View

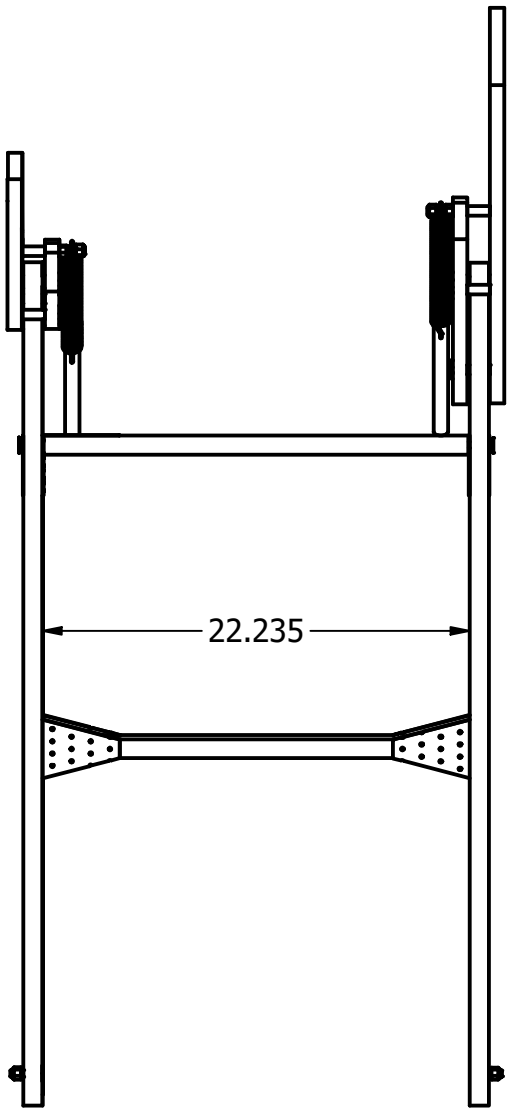

DRAWN robst	1/21/2022				
CHECKED		TITLE			
QA					
MFG					
APPROVED					
		SIZE A		DWG NO 00_2022_everybot_asm	REV
		SCALE 1 / 10			SHEET 12 OF 28

Tailhook Assembly 01 1 T
Front View

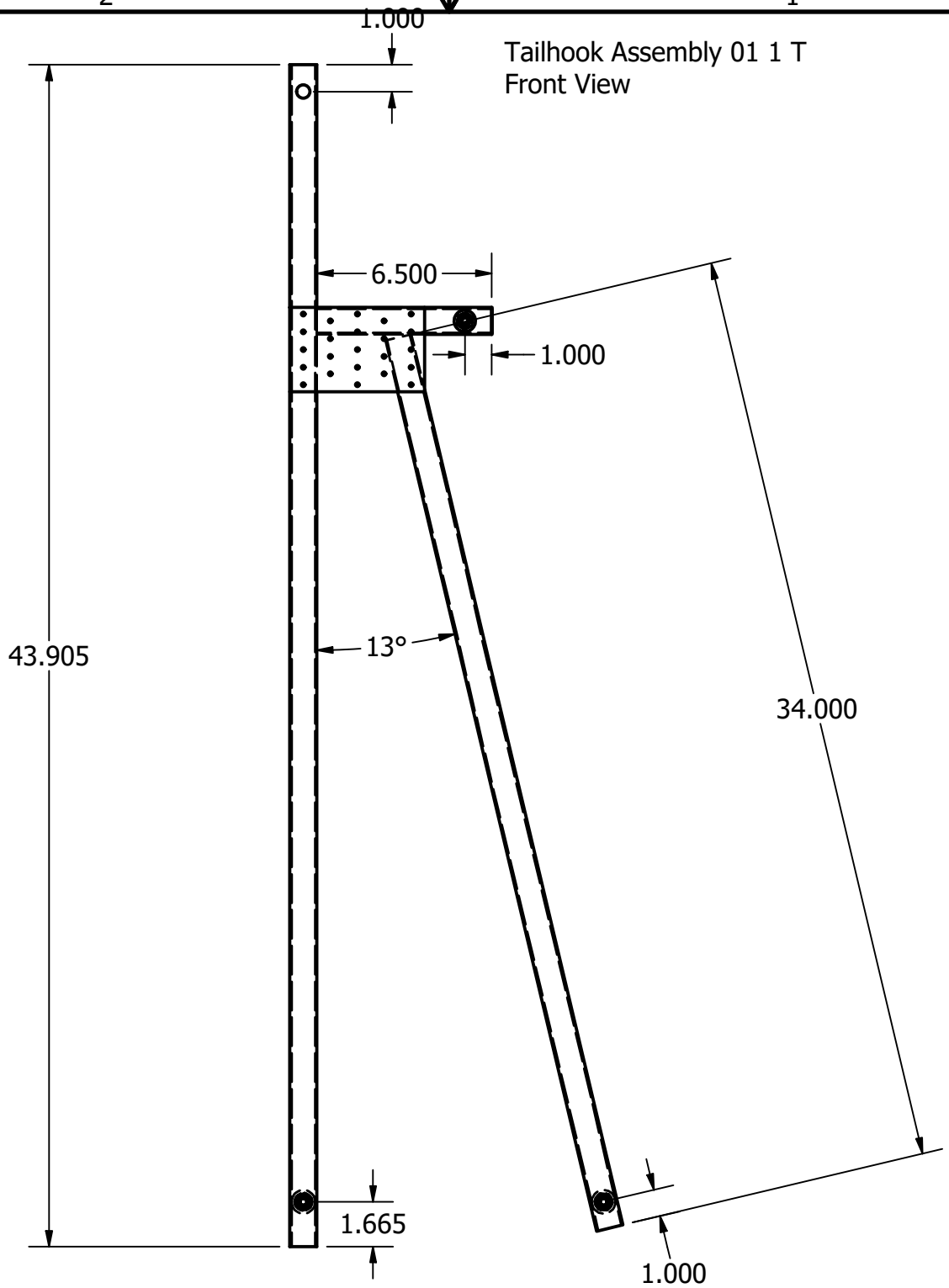

DRAWN robst	1/21/2022				
CHECKED		TITLE			
QA					
MFG					
APPROVED					
		SIZE A		DWG NO 00_2022_everybot_asm	REV
		SCALE 1 / 6		SHEET 13 OF 28	

Tailhook Assembly 01 1 T
Right View

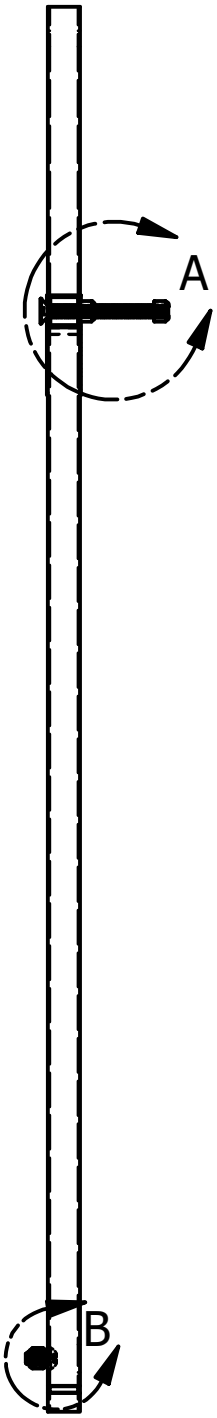

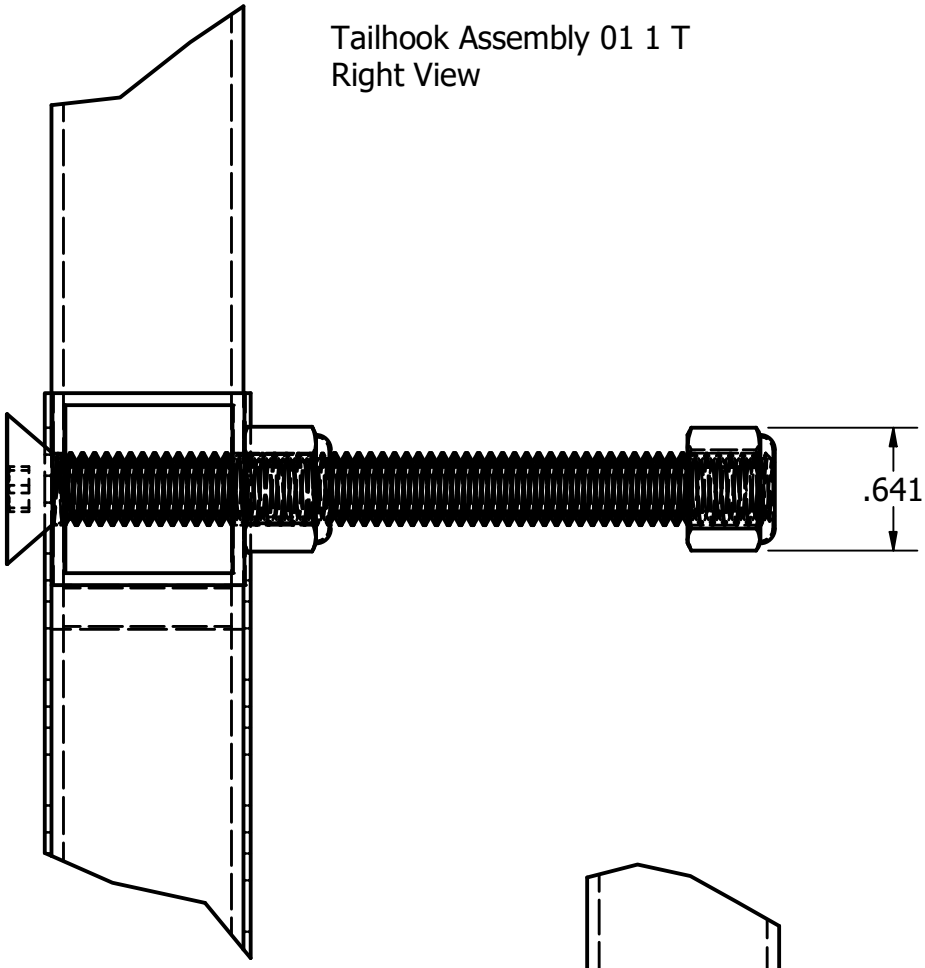

DETAIL A
SCALE 1 : 1

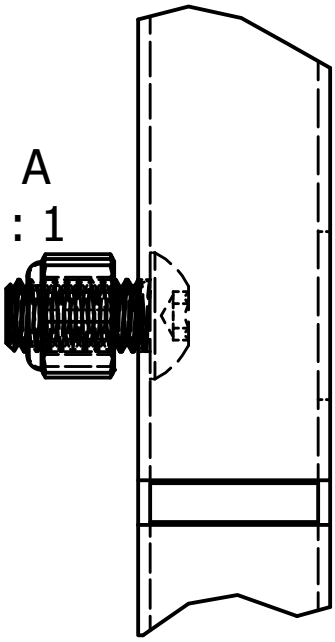

DETAIL B
SCALE 1 : 1

DRAWN robst	1/21/2022	TITLE
CHECKED		
QA		
MFG		
APPROVED		

SIZE	DWG NO	REV
A	00_2022_everybot_asm	

SCALE 1 / 6 SHEET 14 OF 28

Tailhook Arm-T Assembly

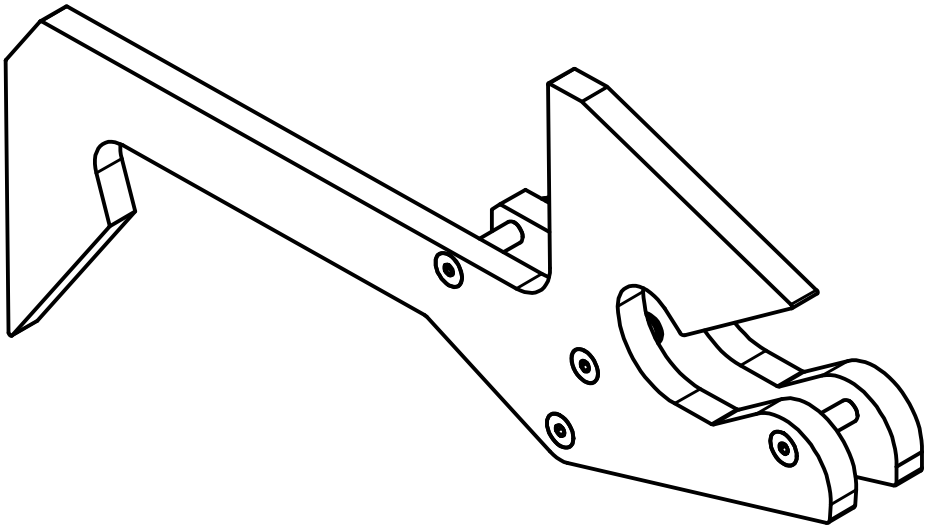

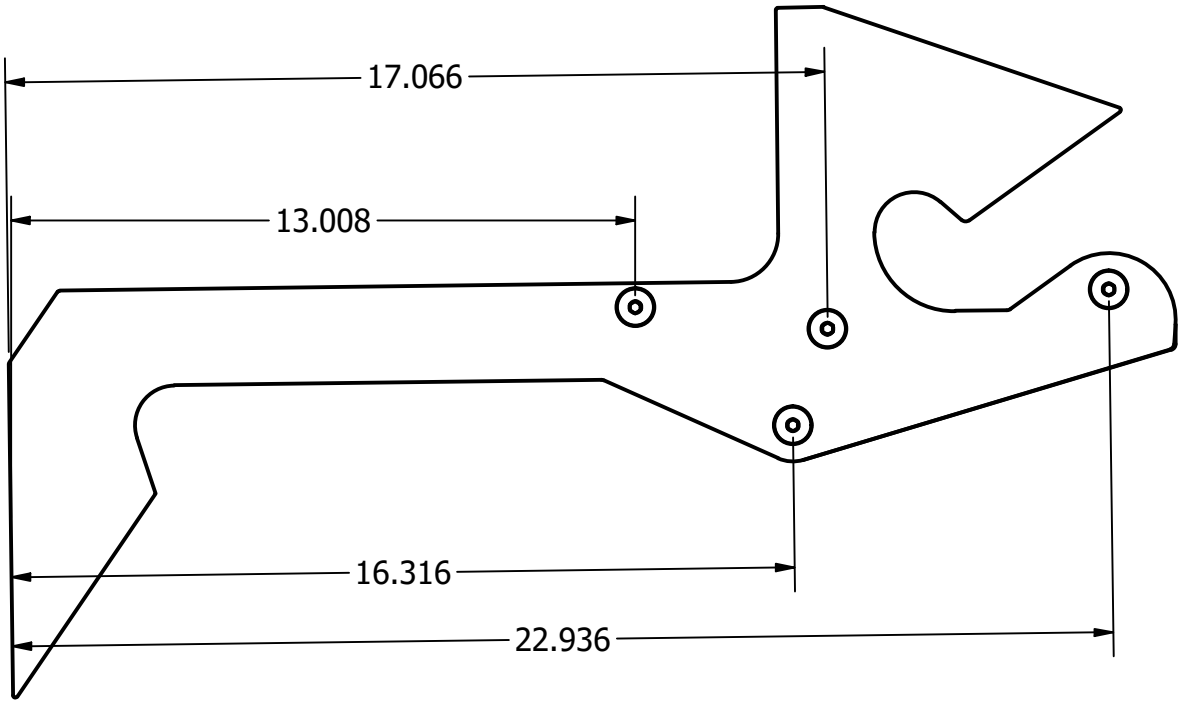

DRAWN robst	1/21/2022				
CHECKED		TITLE			
QA					
MFG					
APPROVED					
		SIZE A		DWG NO 00_2022_everybot_asm	REV
		SCALE 1 / 4			SHEET 15 OF 28

Tailhook Arm Assembly

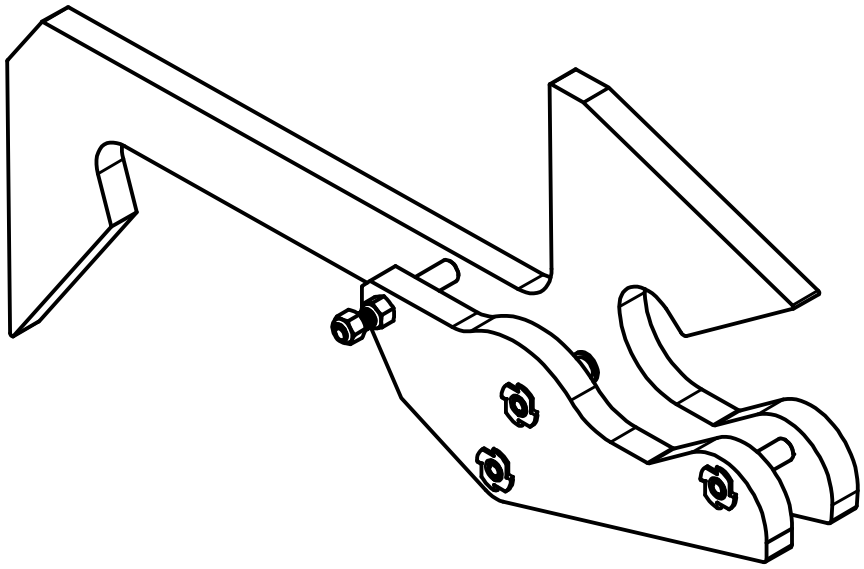

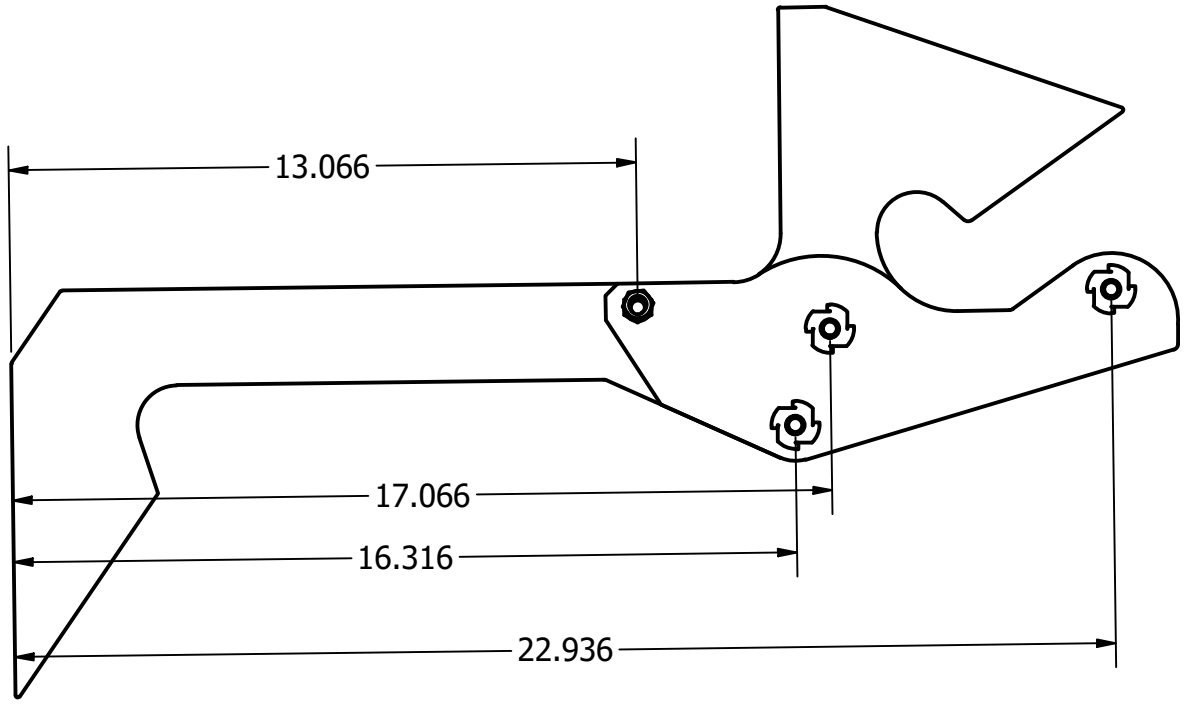

DRAWN robst	1/21/2022				
CHECKED		TITLE			
QA					
MFG					
APPROVED					
		SIZE A		DWG NO 00_2022_everybot_asm	REV
		SCALE 1 / 4			SHEET 16 OF 28

Tailhook Arm Assembly
Right View

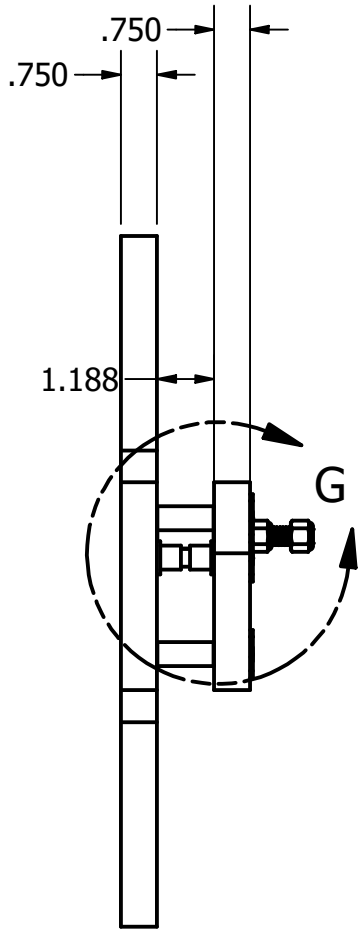

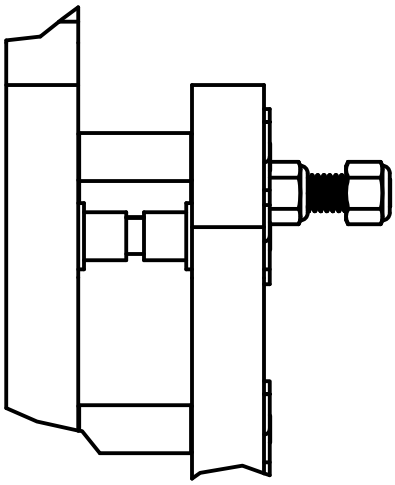

DETAIL G
SCALE 1 / 2

DRAWN robst	1/21/2022				
CHECKED		TITLE			
QA					
MFG					
APPROVED					
		SIZE A		DWG NO 00_2022_everybot_asm	REV
		SCALE 1 /4		SHEET 17 OF 28	

Tailhook Arm 02

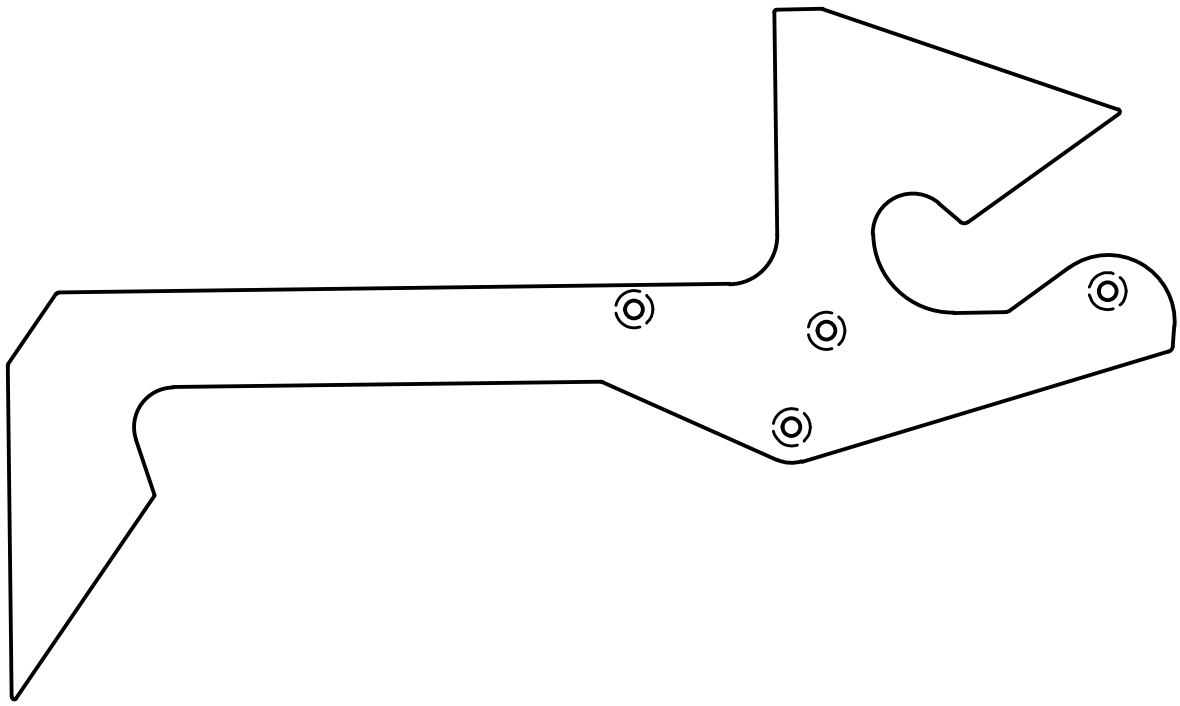

DRAWN robst	1/21/2022				
CHECKED		TITLE			
QA					
MFG					
APPROVED					
		SIZE A		DWG NO 00_2022_everybot_asm	REV
		SCALE 1 / 4		SHEET 18 OF 28	

Tailhook Arm 02 Mirror

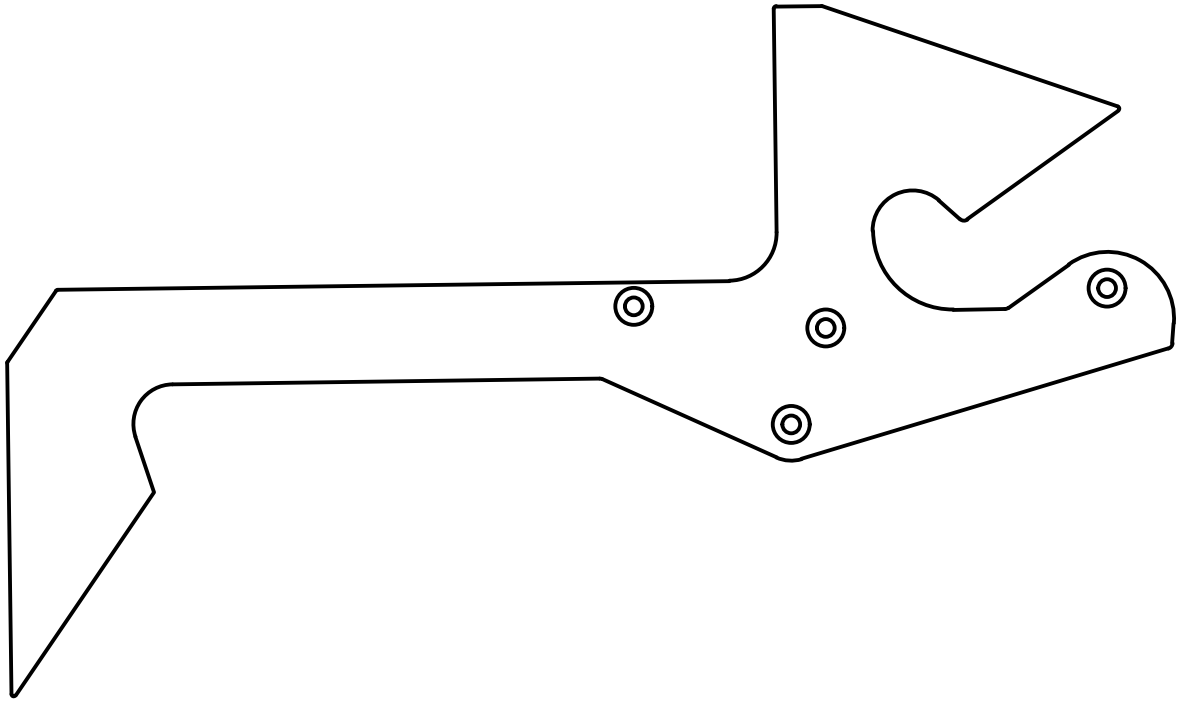

DRAWN robst	1/21/2022				
CHECKED		TITLE			
QA					
MFG					
APPROVED					
		SIZE A		DWG NO 00_2022_everybot_asm	REV
		SCALE 1 / 4			SHEET 19 OF 28

AM 1590 1188

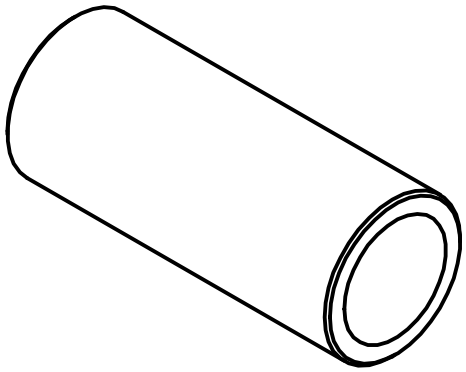

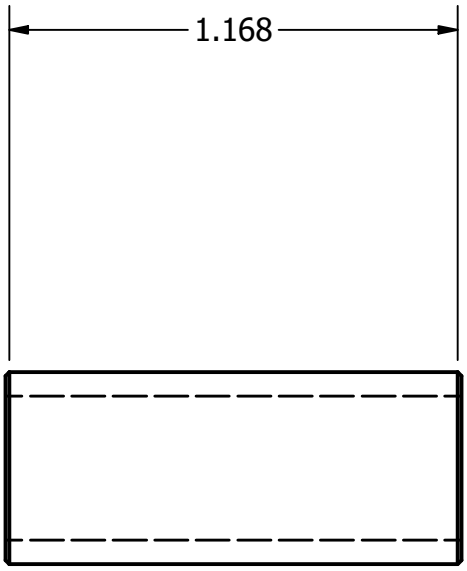

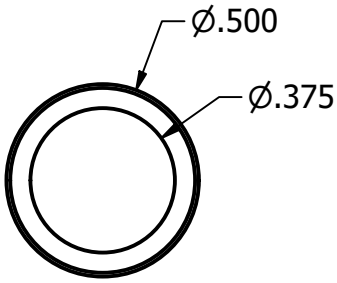

DRAWN robst	1/21/2022				
CHECKED		TITLE			
QA					
MFG					
APPROVED					
		SIZE A		DWG NO 00_2022_everybot_asm	REV
		SCALE 2 : 1			SHEET 20 OF 28

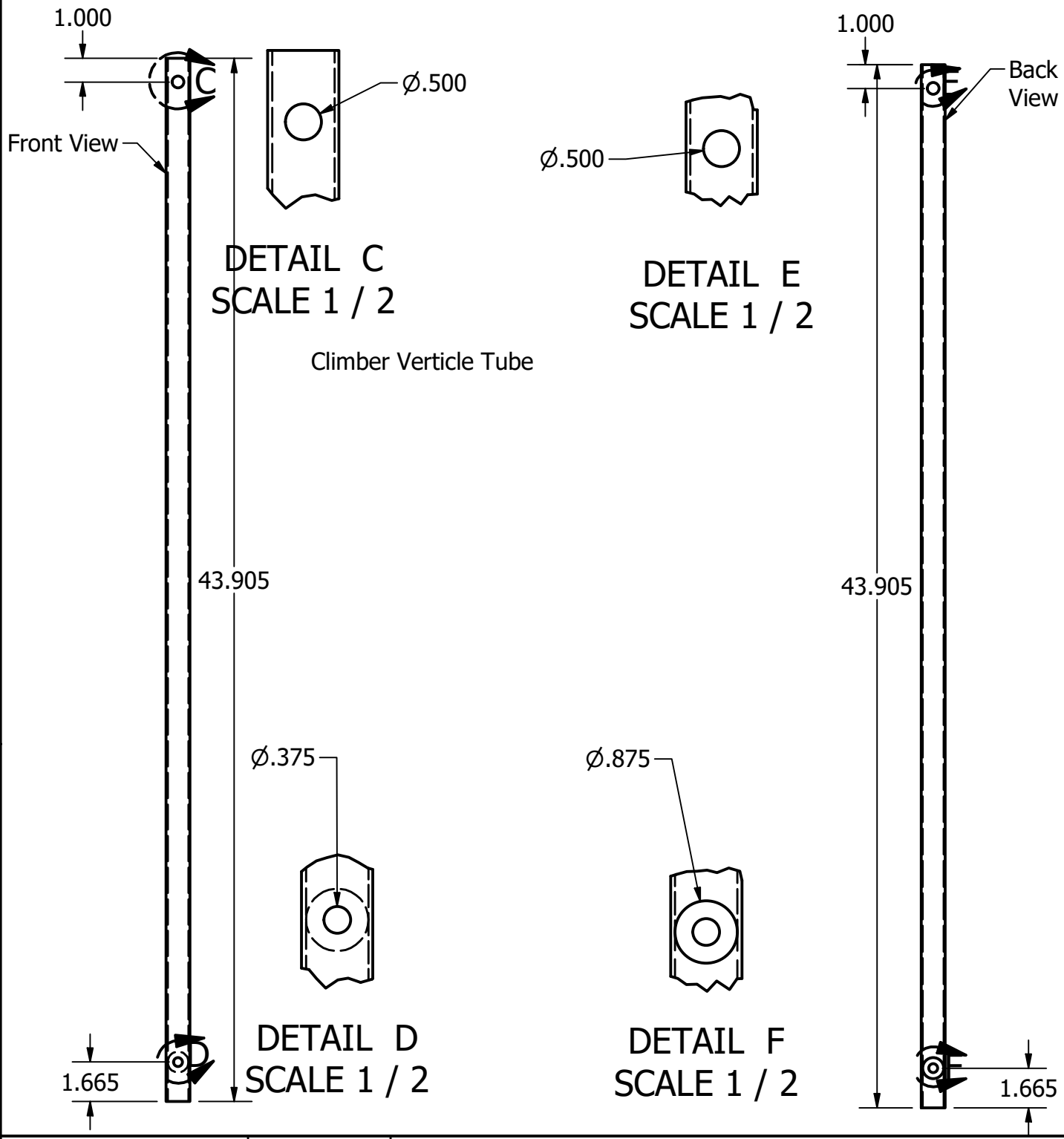

DRAWN robst	1/21/2022				
CHECKED		TITLE			
QA					
MFG					
APPROVED					
		SIZE A		DWG NO 00_2022_everybot_asm	REV
		SCALE 1 / 6		SHEET 21 OF 28	

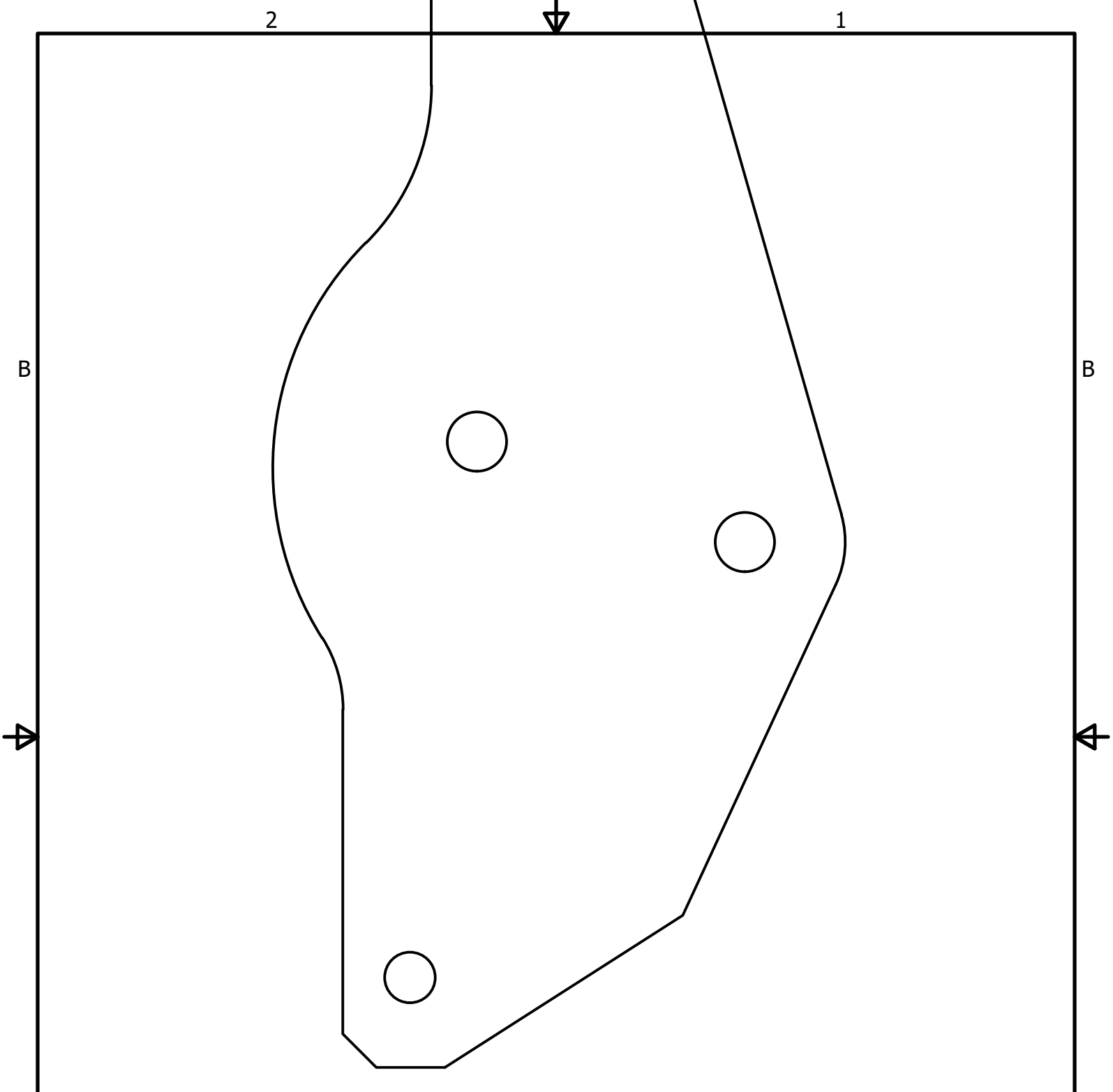

DRAWN robst	1/21/2022				
CHECKED		TITLE			
QA					
MFG					
APPROVED					
		SIZE A		DWG NO 00_2022_everybot_asm	REV
		SCALE 1 : 1			SHEET 22 OF 28

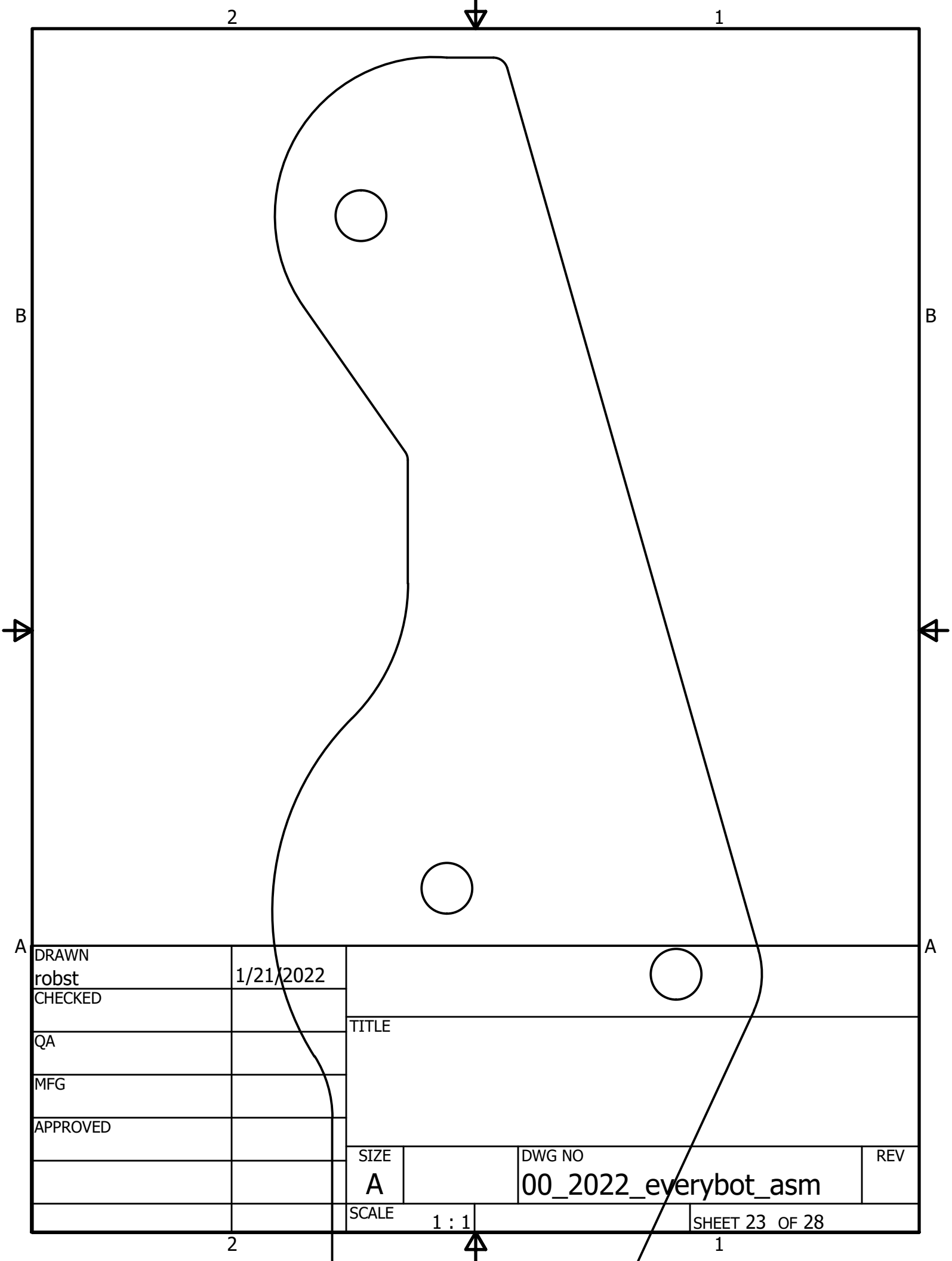

DRAWN robst	1/21/2022	
CHECKED		TITLE
QA		
MFG		
APPROVED		
		SIZE A / DWG NO 00_2022_everybot_asm / REV
		SCALE 1 : 1 / SHEET 23 OF 28

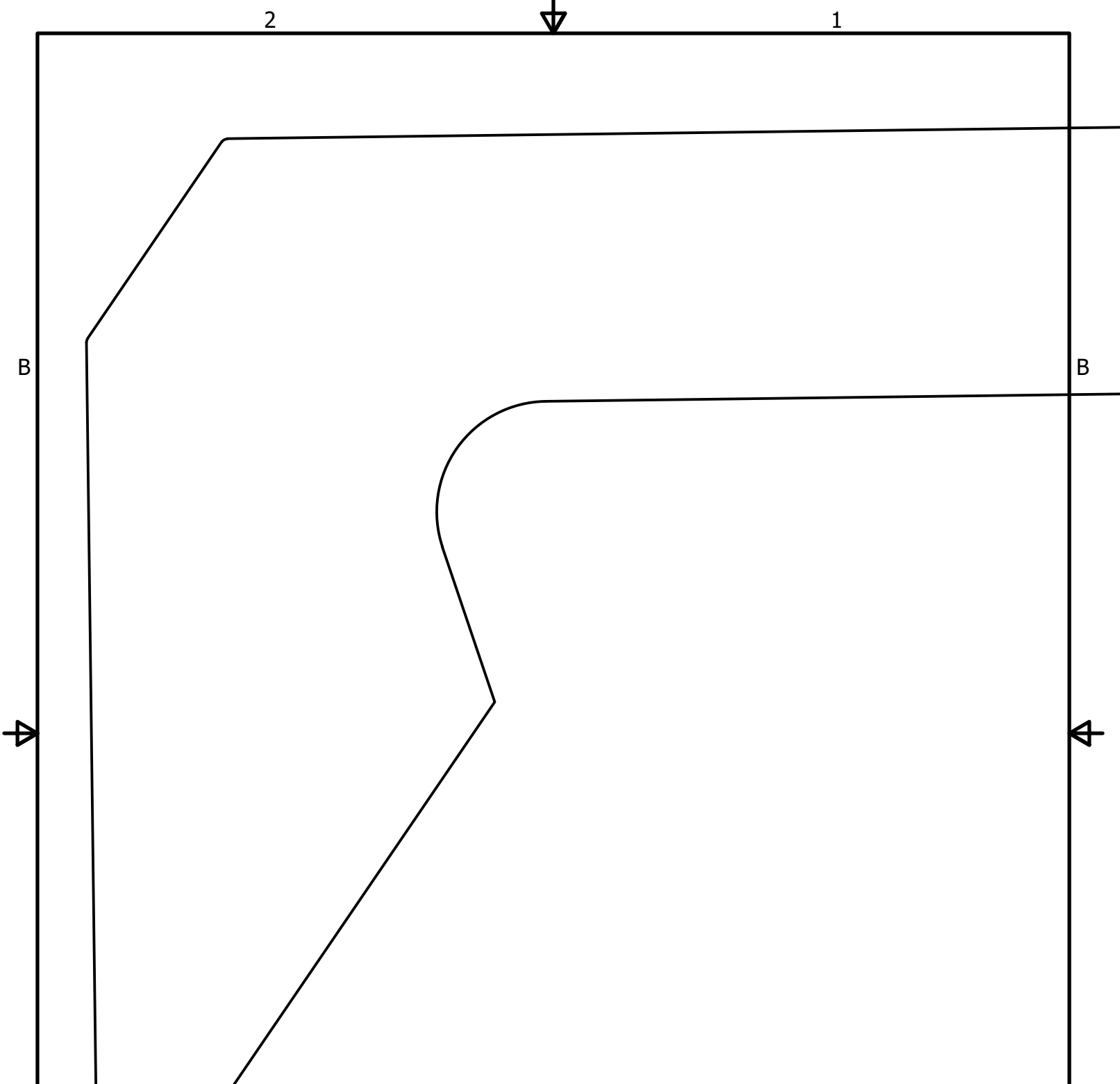

DRAWN robst	1/21/2022	
CHECKED		TITLE
QA		
MFG		
APPROVED		
		SIZE A / DWG NO 00_2022_everybot_asm / REV
		SCALE 1 : 1 / SHEET 24 OF 28

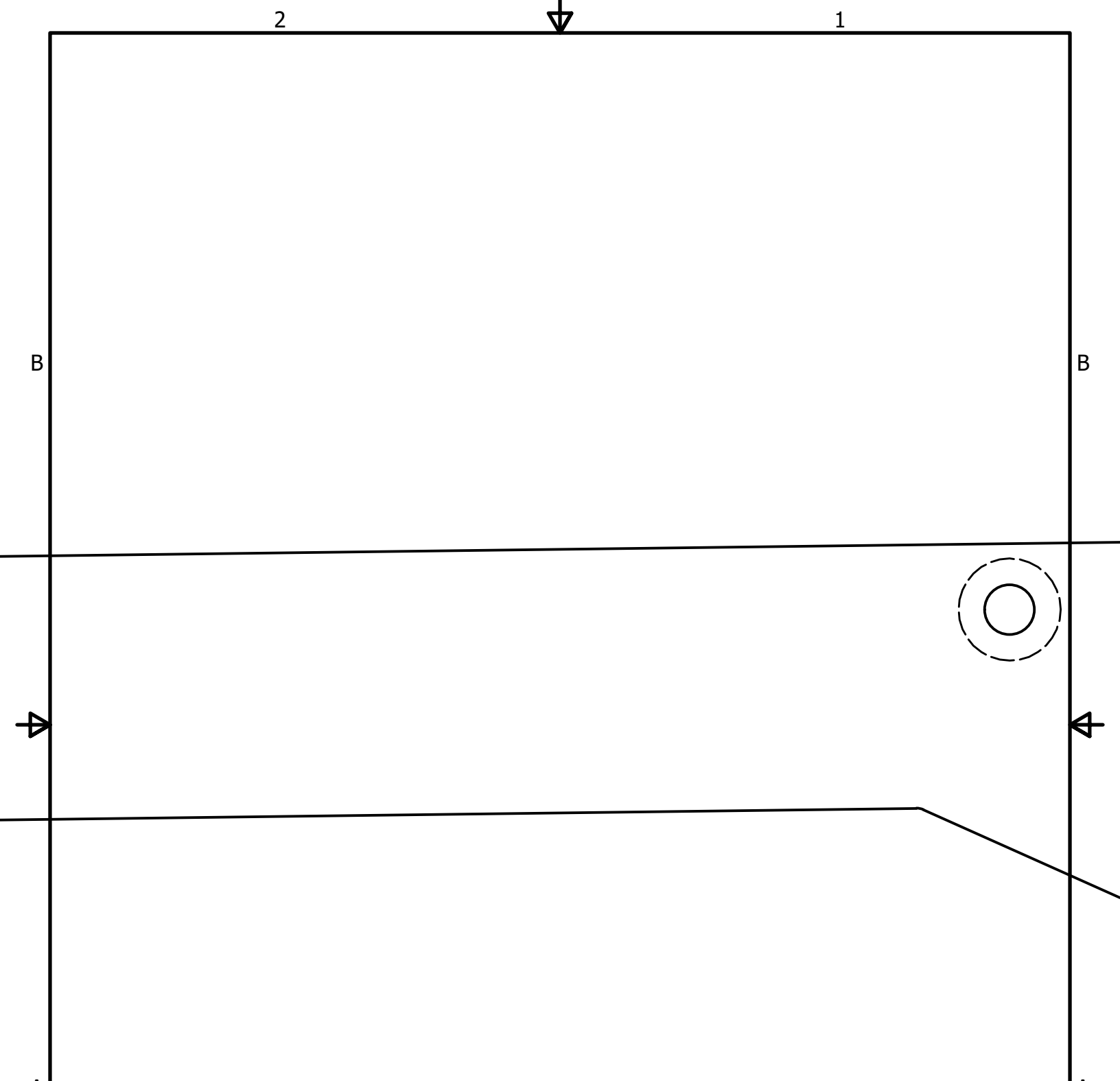

DRAWN robst	1/21/2022	
CHECKED		TITLE
QA		
MFG		
APPROVED		
		SIZE A / DWG NO 00_2022_everybot_asm / REV
		SCALE 1 : 1 / SHEET 25 OF 28

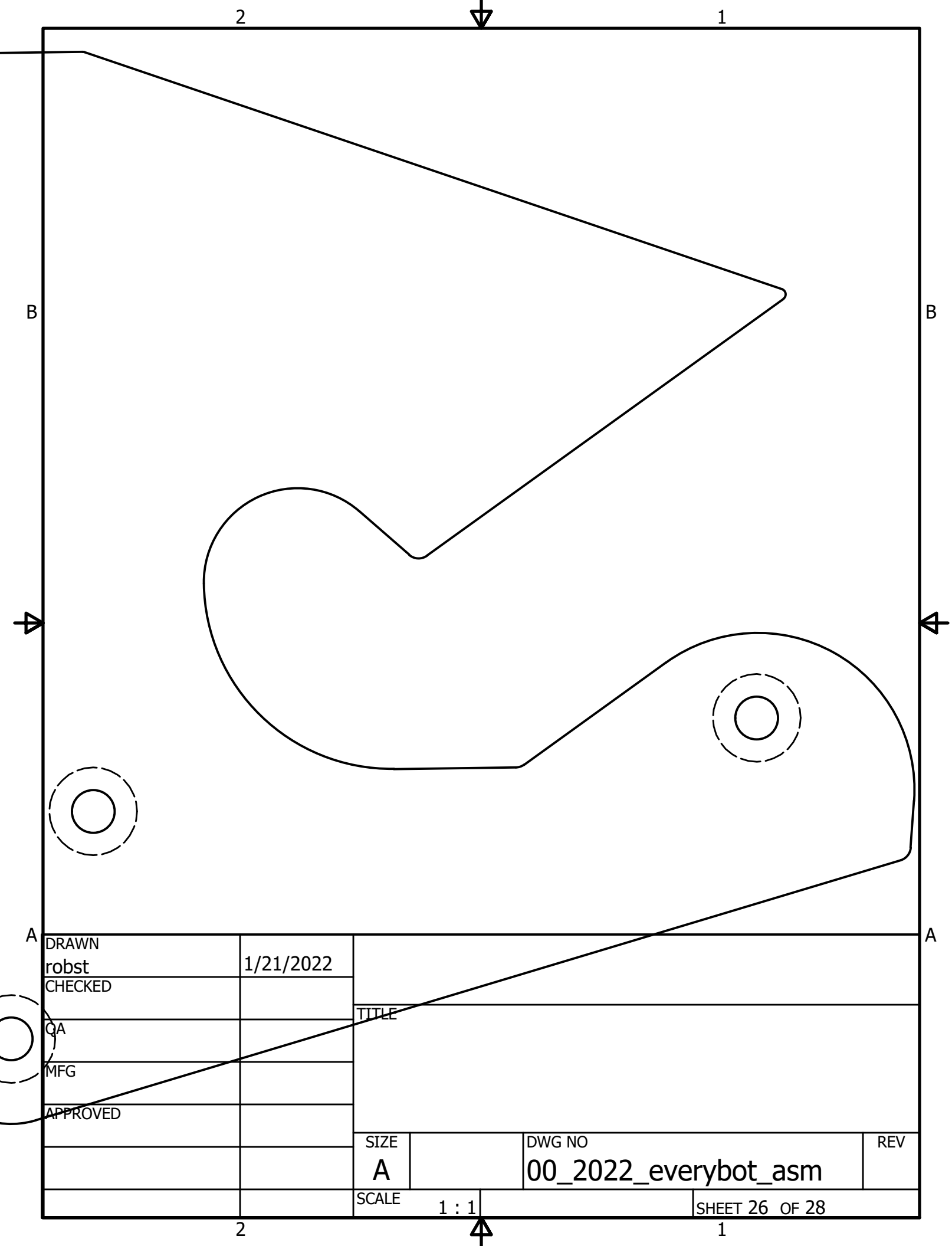

DRAWN robst	1/21/2022				
CHECKED		TITLE			
QA					
MFG					
APPROVED					
		SIZE A		DWG NO 00_2022_everybot_asm	REV
		SCALE 1 : 1			SHEET 26 OF 28

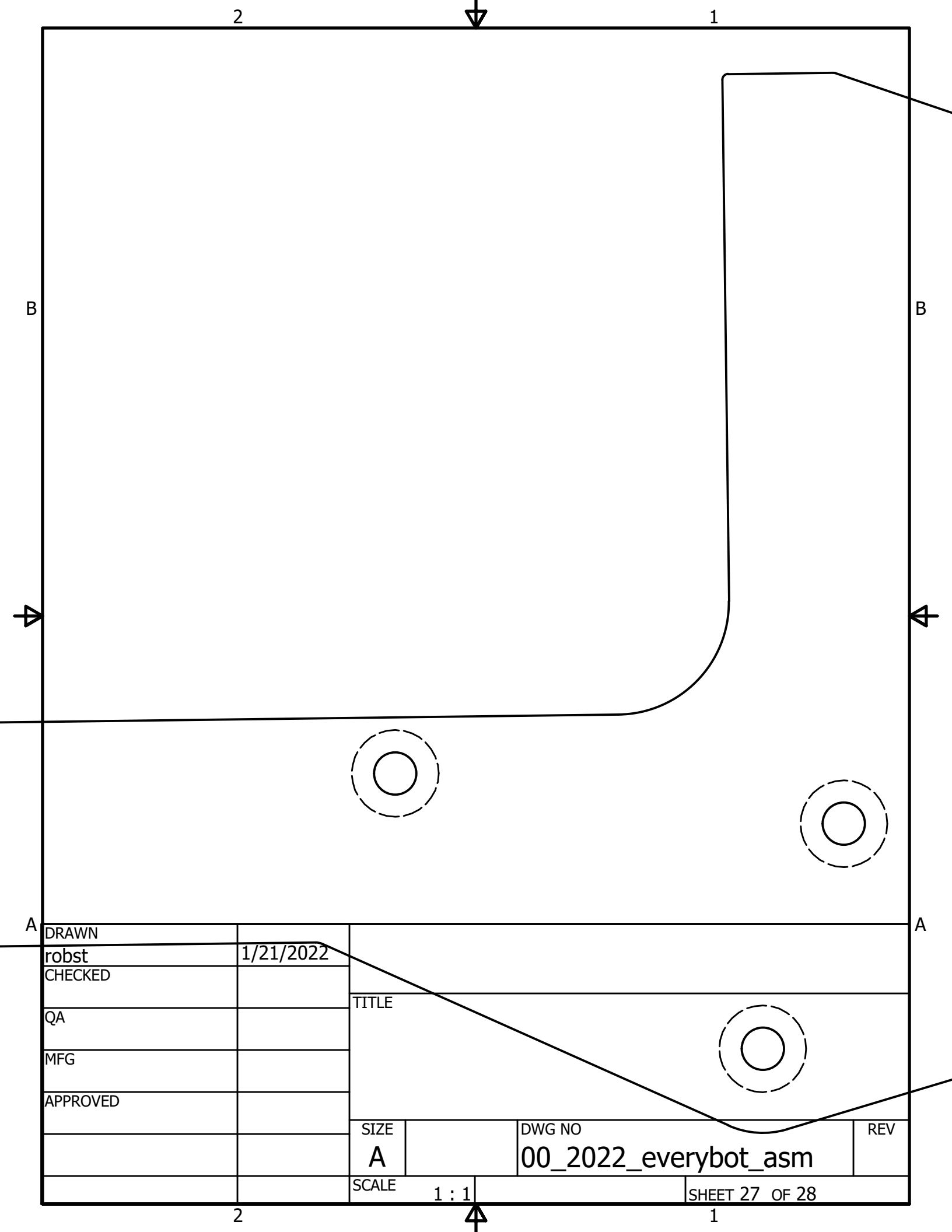
2
1
B
B
A
A
DRAWN
robst
1/21/2022
CHECKED
QA
MFG
APPROVED
TITLE
SIZE
A
DWG NO
00_2022_everybot_asm
REV
SCALE
1 : 1
SHEET 27 OF 28
2
1

Backing Plate

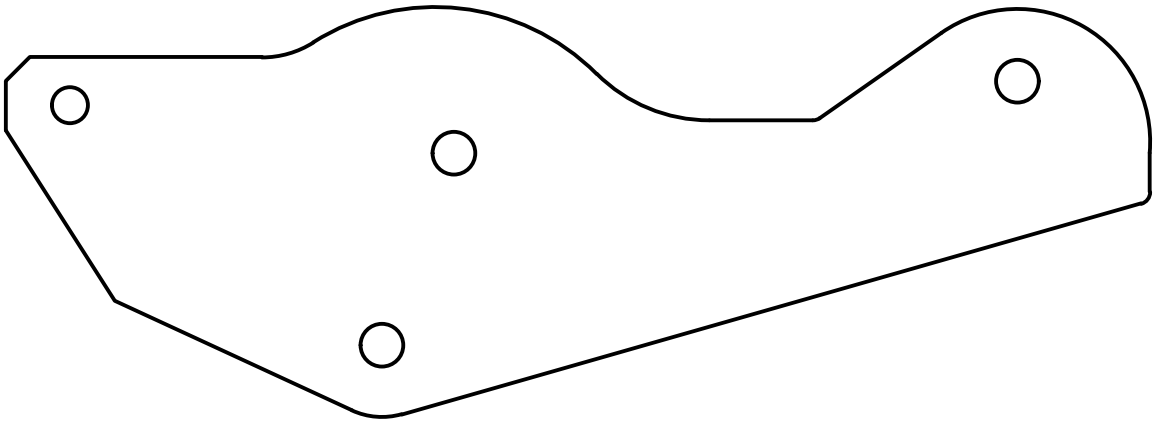

DRAWN robst	1/21/2022	
CHECKED		TITLE
QA		
MFG		
APPROVED		
		SIZE A / DWG NO 00_2022_everybot_asm / REV
		SCALE 1 / 2 / SHEET 28 OF 28