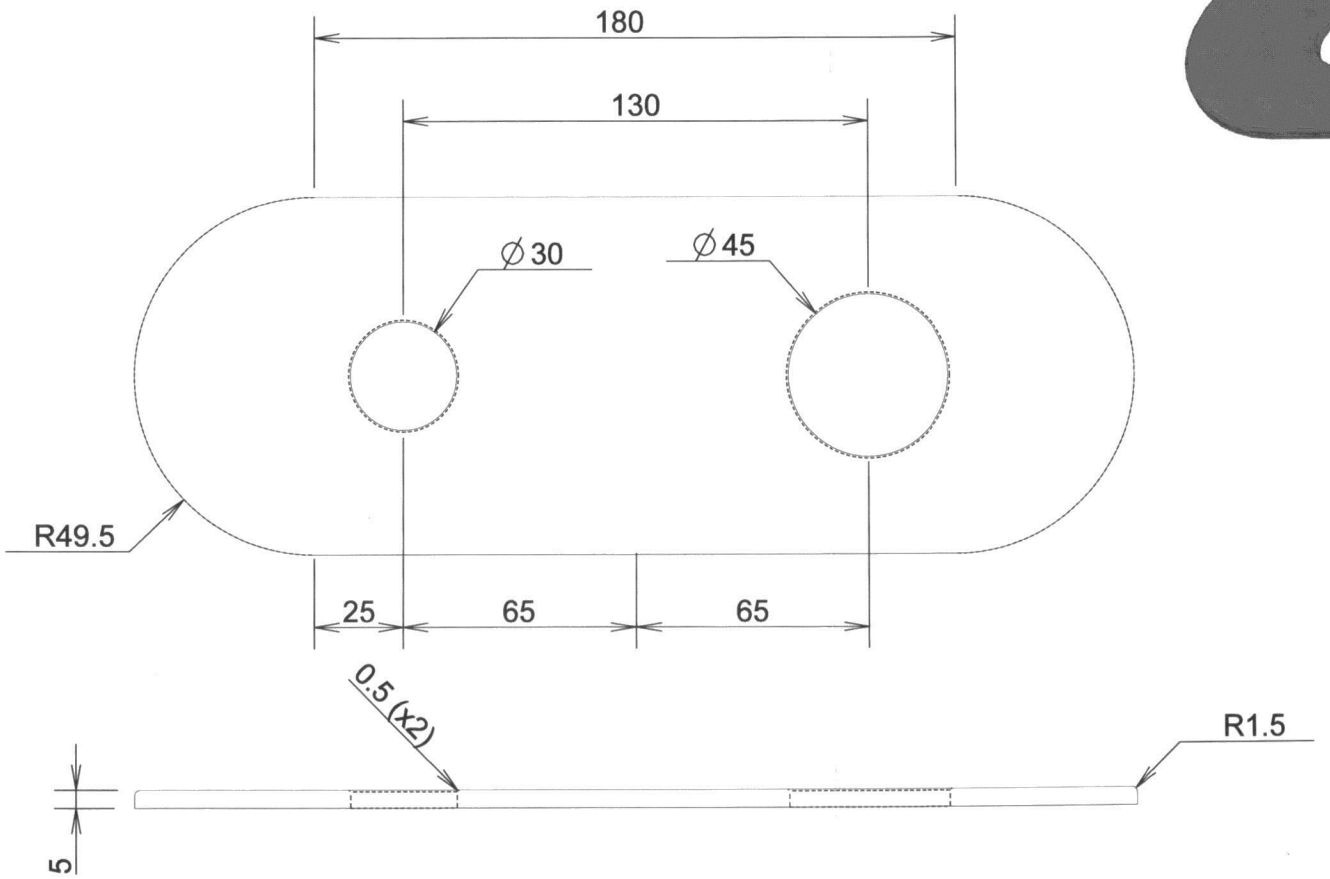

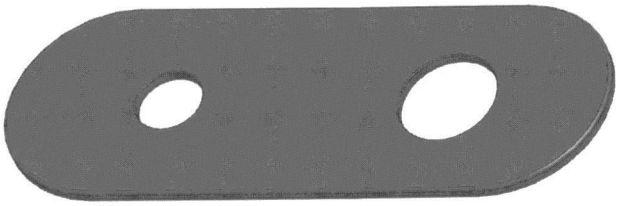

ECHELLE 0.330

SCALE 0.500	PROJ. FIRST ANGLE	UNIT mm	GENERAL ROUGHNESS 0.8	Ra in um.	UN-D-28	TOLERANCES UNLESS OTHERWISE STATED DIMENSIONS ANGLE ISO 2768 (f)

INNOVAUDIO sarl
44, avenue Jean Bart
95000 Cergy - FRANCE

MATERIAL	Laiton ep 5mm	USED IN	ORDER N° / QTY
TREATMENT	MAT GUN METAL PVB	REVISION 6	
		REVISION 5	
		REVISION 4	
		REVISION 3	
		REVISION 2	
		REVISION 1	
P/N	PLAQUE_DOUCHE_V1	NAME	A4
NAME	Daniel SCHAR	DATE 19/03/2021	CHECK
SHEET	1 OF 1		