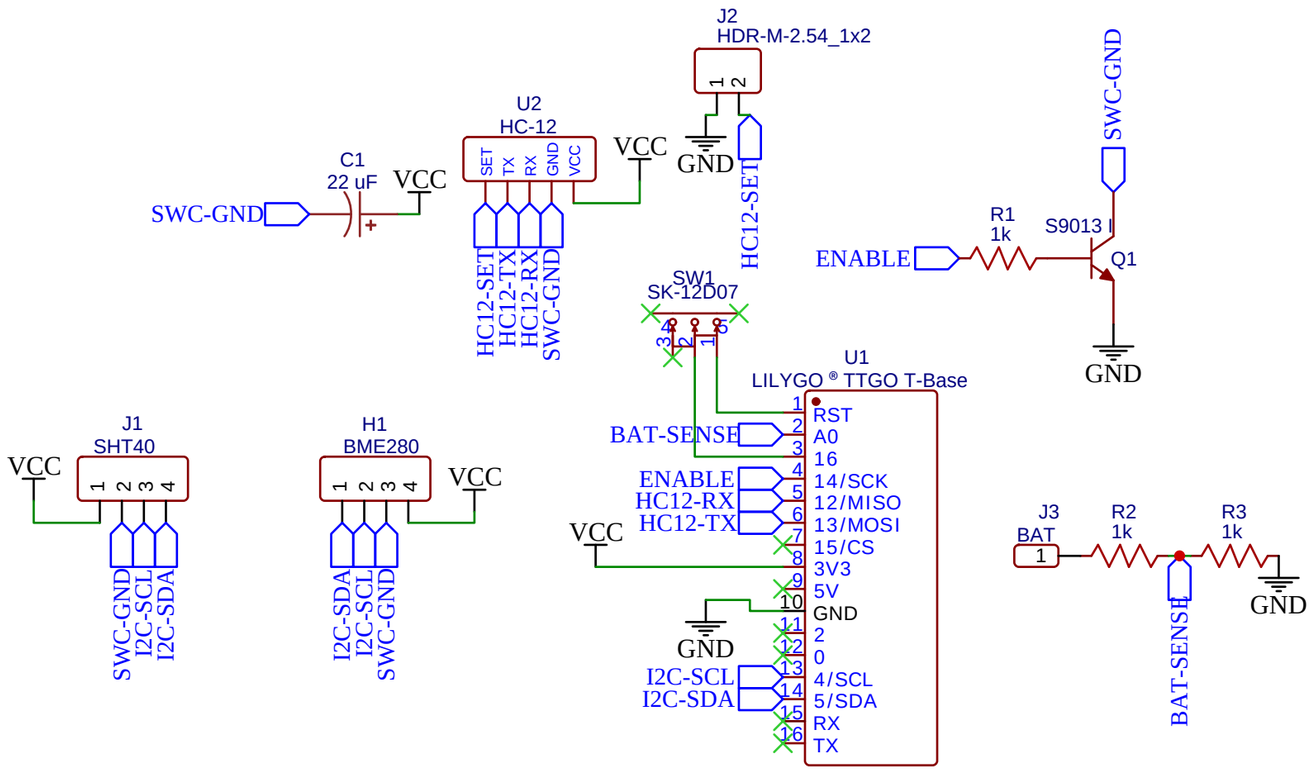

TITLE: E-WWS-SENDER		REV: 1.0
嘉立创EDA	Company: Your Company	Sheet: 1/1
	Date: 2023-06-07 Drawn By: Mika_	