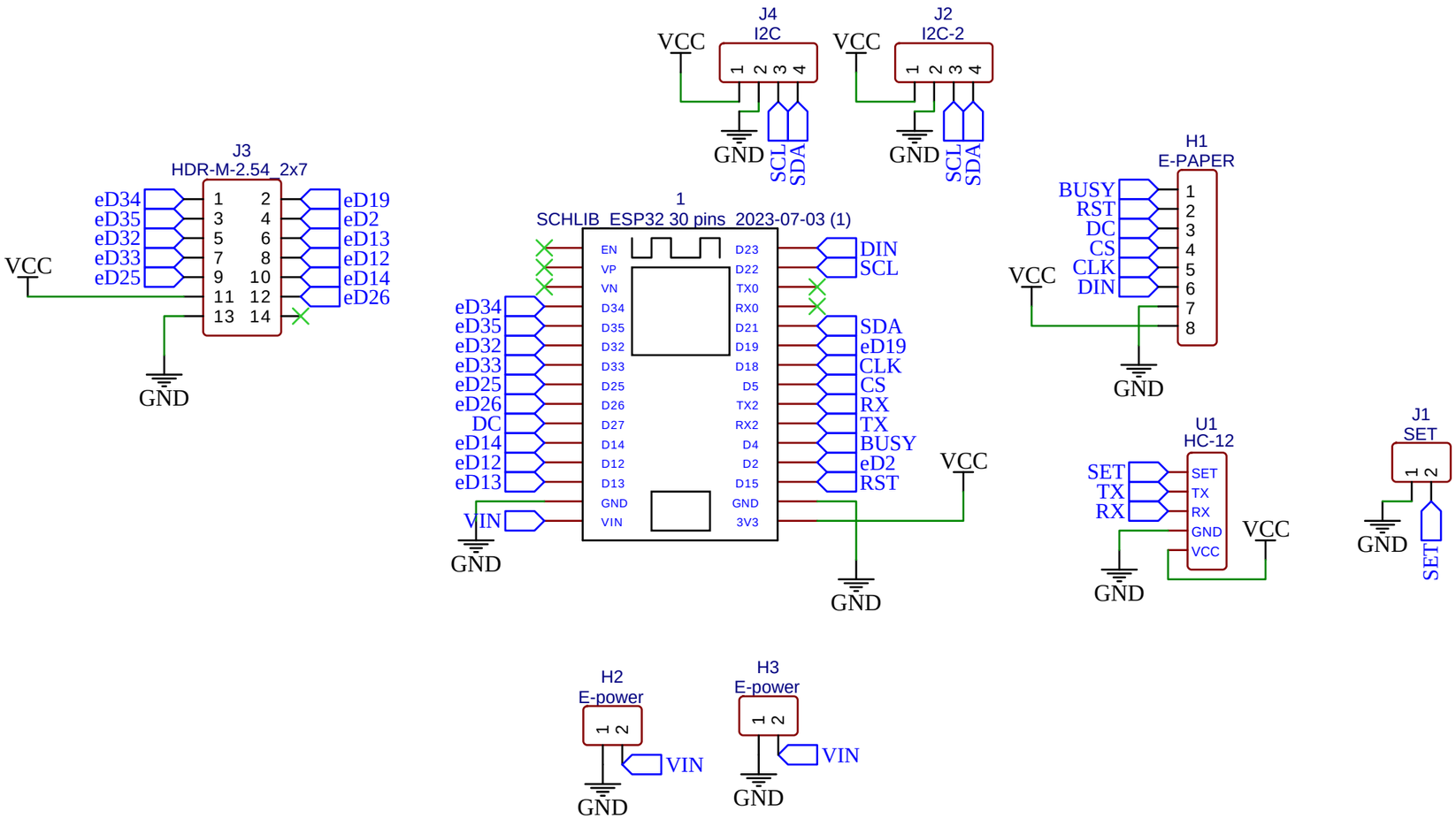

TITLE: E-WWS-RECIEVER		REV: 1.0
嘉立创EDA	Company: Your Company	Sheet: 1/1
	Date: 2023-08-08 Drawn By: Mika_	