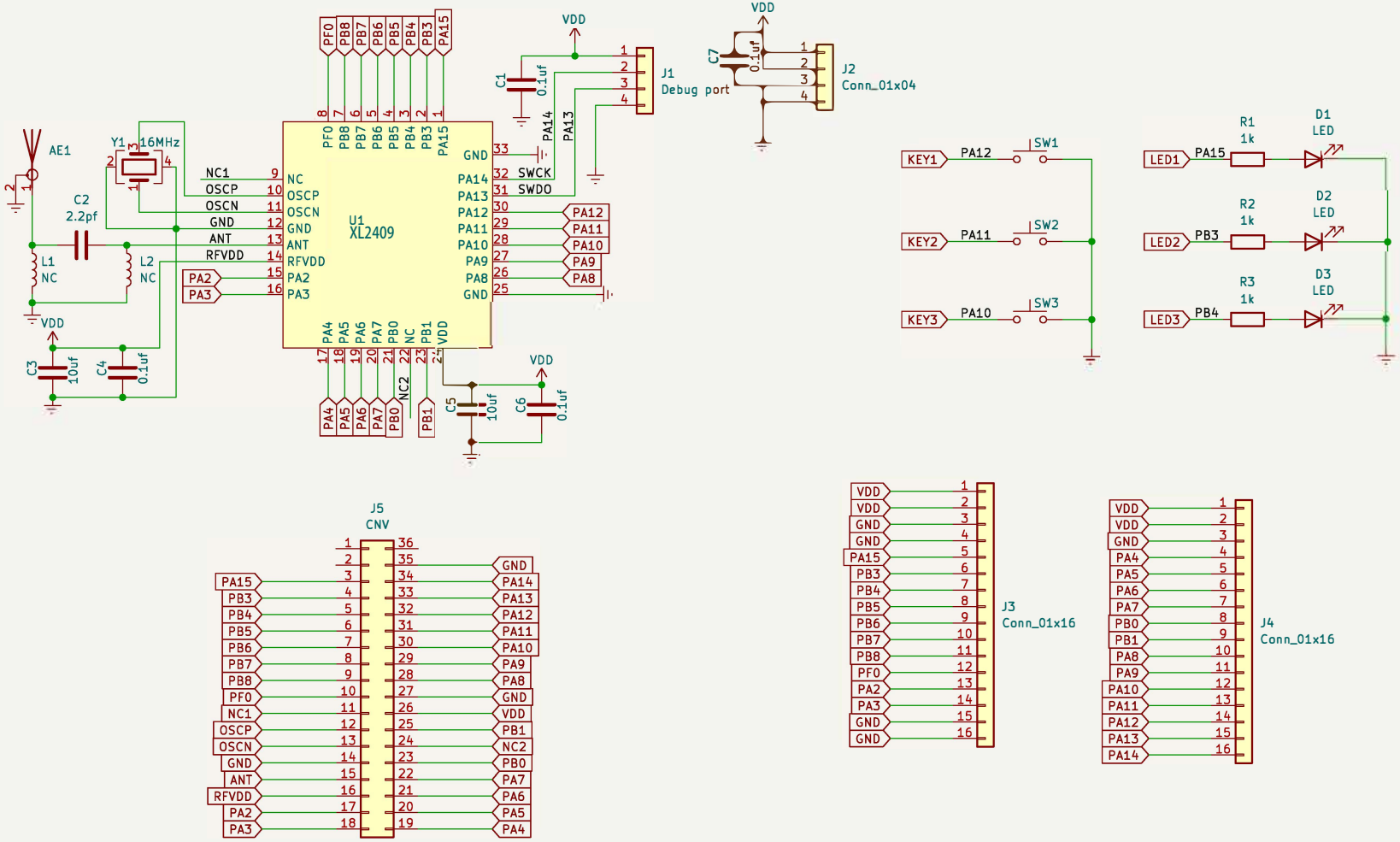

Sheet: /
File: XL2409 refer schematic v1.0.kicad_sch

Title:

Size: A4	Date:	Rev:
KiCad E.D.A. kicad (6.0.0-rc1-291-g863699f2d1)		Id: 1/1