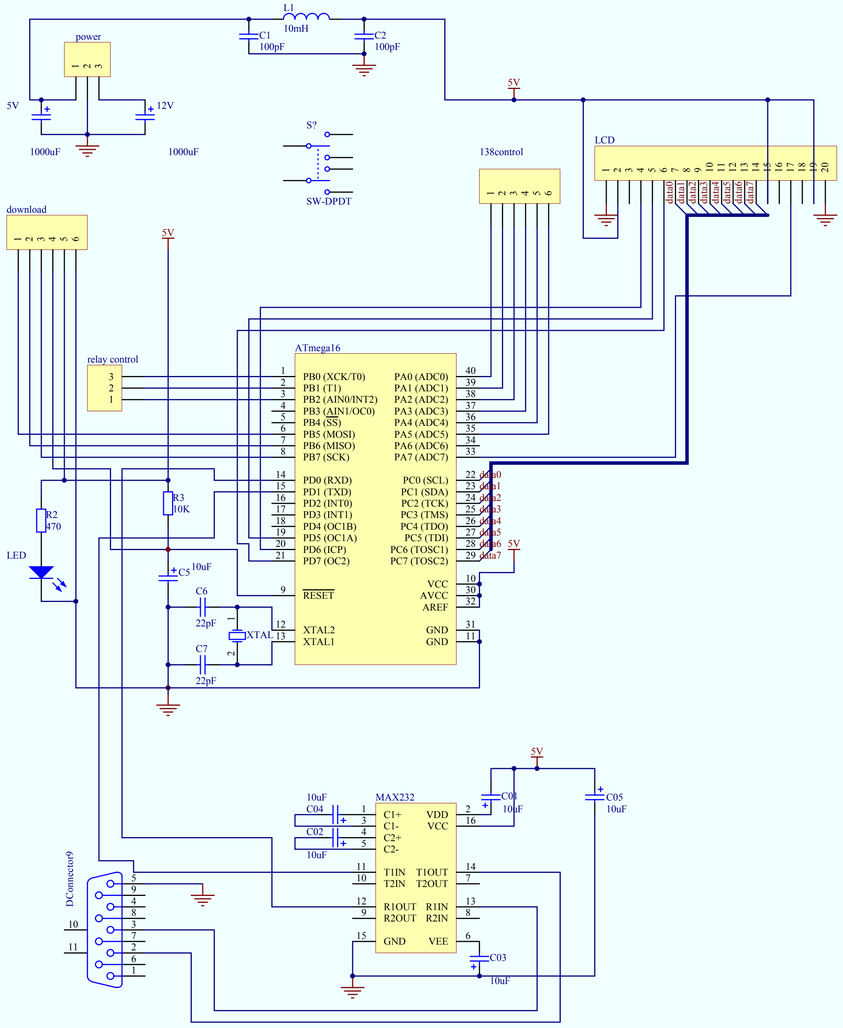

Title		
Size A2	Number	Revision
Date: 2009-6-6		Sheet of
File: E:\ \..\ .SchDoc		Drawn By: