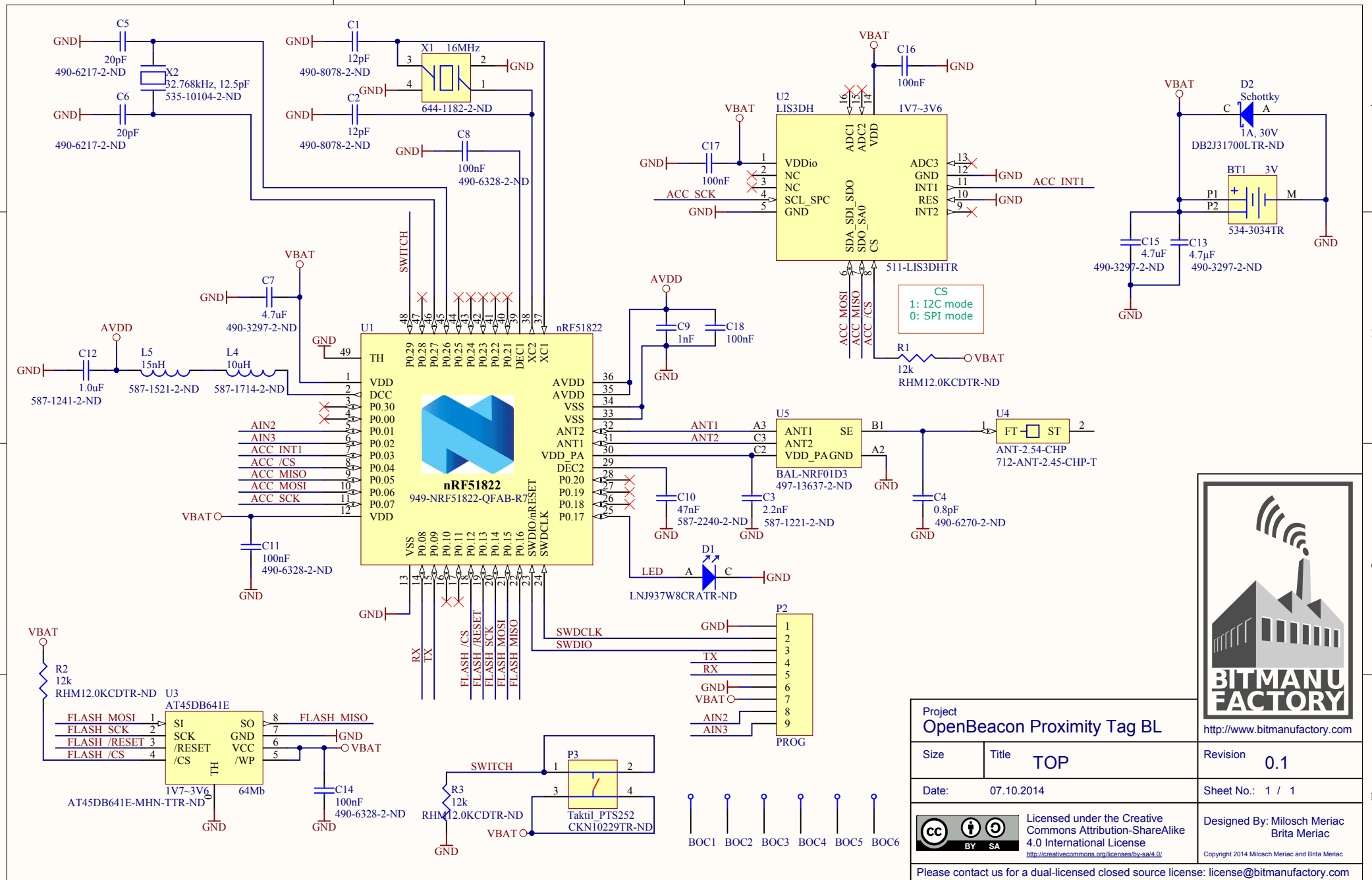
C5
20pF
490-6217-2-ND
C6
20pF
490-6217-2-ND
X2
32.768kHz, 12.5pF
535-10104-2-ND
C1
12pF
490-8078-2-ND
C2
12pF
490-8078-2-ND
X1 16MHz
644-1182-2-ND
C8
100nF
490-6328-2-ND
C7
4.7uF
490-3297-2-ND
C12
1.0uF
587-1241-2-ND
L5
15nH
587-1521-2-ND
L4
10uH
587-1714-2-ND
U1
nRF51822
949-NRF51822-QFAB-R7
C11
100nF
490-6328-2-ND
U2
LIS3DH
511-LIS3DHTR
1V7~3V6
C16
100nF
C17
100nF
ACC_SCK
ACC_INT1
ACC_MOSI
ACC_MISO
ACC_/CS
CS
1: I2C mode
0: SPI mode
R1
12k
RHM12.0KCDTR-ND
D2
Schottky
1A, 30V
DB2J31700LTR-ND
BT1 3V
534-3034TR
C15
4.7uF
490-3297-2-ND
C13
4.7µF
490-3297-2-ND
C9
1nF
C18
100nF
U5
BAL-NRF01D3
497-13637-2-ND
U4
ANT-2.54-CHP
712-ANT-2.45-CHP-T
C10
47nF
587-2240-2-ND
C3
2.2nF
587-1221-2-ND
C4
0.8pF
490-6270-2-ND
D1
LNJ937W8CRATR-ND
LED
P2
PROG
R2
12k
RHM12.0KCDTR-ND
U3
AT45DB641E
AT45DB641E-MHN-TTR-ND
64Mb
C14
100nF
490-6328-2-ND
P3
Taktil_PTS252
CKN10229TR-ND
R3
12k
RHM12.0KCDTR-ND
BOC1
BOC2
BOC3
BOC4
BOC5
BOC6
BITMANUFACTORY
http://www.bitmanufactory.com
Project
OpenBeacon Proximity Tag BL
Size
Title
TOP
Revision
0.1
Date:
07.10.2014
Sheet No.: 1 / 1
Licensed under the Creative Commons Attribution-ShareAlike 4.0 International License
http://creativecommons.org/licenses/by-sa/4.0/
Designed By: Milosch Meriac
Brita Meriac
Copyright 2014 Milosch Meriac and Brita Meriac
Please contact us for a dual-licensed closed source license: license@bitmanufactory.com