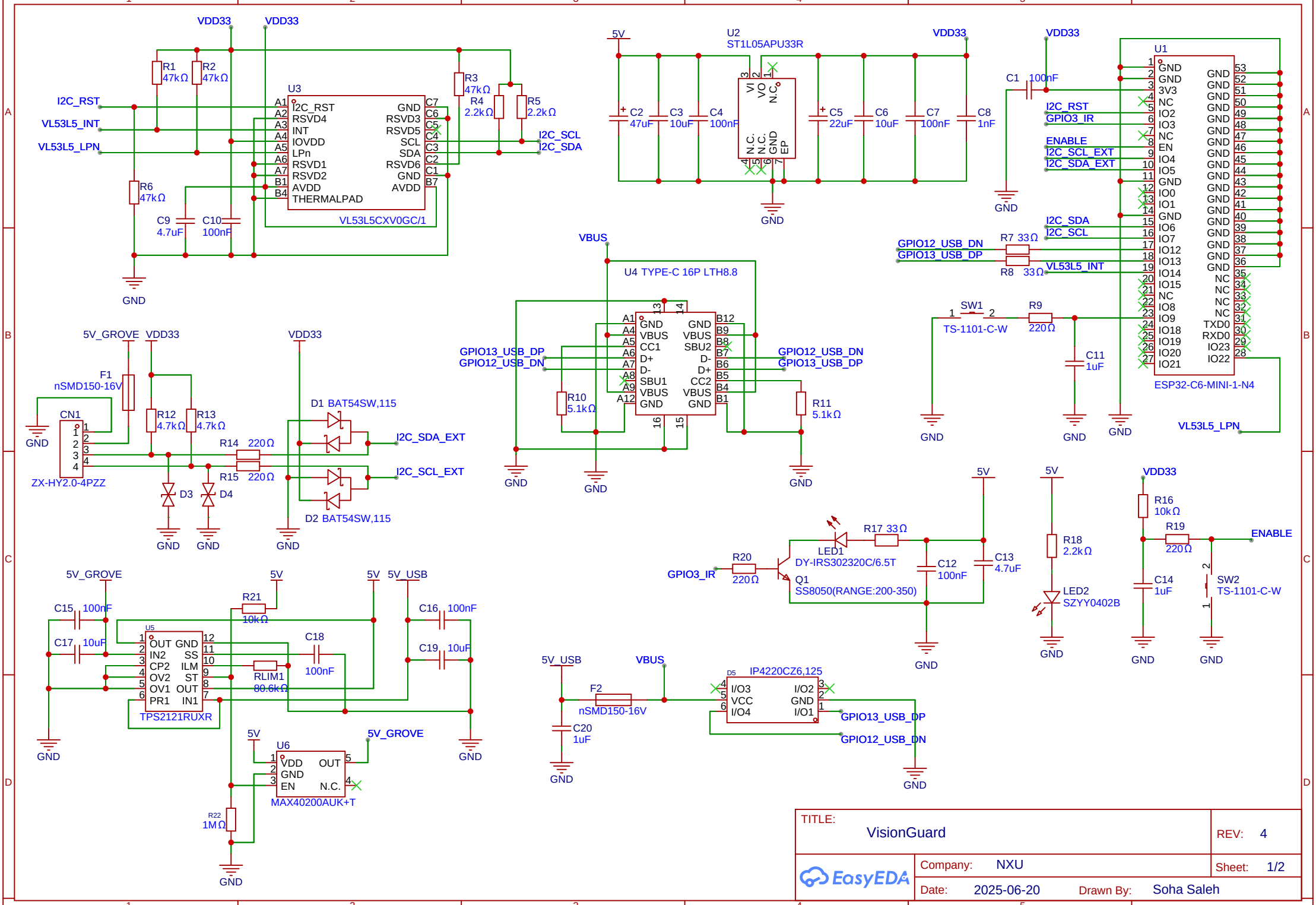

TITLE: VisionGuard		REV: 4
EasyEDA	Company: NXU	Sheet: 1/2
	Date: 2025-06-20 Drawn By: Soha Saleh	