Modeling and Numerical Study of Thermoelectric Generators

Soham Banerjee[1*], Ishita Chaudhary[1], Pabitra Bhuyan[1] and Bijan Kumar Mondal[1]

[1]Mechanical Engineering, Indian Institute of Engineering Science and Technology, Shibpur, Howrah-711103, India
*Corresponding author: Soham Banerjee
banerjeesoham111@gmail.com

Abstract. Thermoelectric generators (TEGs) convert low quality heat energy into high quality electric energy. They play a pivotal role in transforming our society into a sustainable one. Hence, the study of TEGs is of utmost importance. This work presents a new approach to its modeling. It starts with a brief overview of the structure and working principle of a TEG, explaining the thermoelectric effects viz. Seebeck, Peltier, and Joule effects. It leads on to develop a generalized equation applicable to all the components of a TEG module. The analytical solutions are methodically obtained for every TEG component namely copper plates, ceramic substrates, and semiconductor materials, under steady-state conditions. Parametric studies are done to examine the effect of critical design variables such as hot and cold side temperatures, semiconductor leg height, external load resistance, and the number of thermoelectric modules on performance of the TEG. The results provide information about how geometric parameters and external operating conditions interact to shape TEG performance. The study establishes a strong basis for evaluating TEG systems and identifies areas for further investigation, including the creation of a more precise model that incorporates the Thompson effect and the incorporation of dynamic heat sources to enhance operational robustness and energy conversion efficiency.

Keywords: Thermoelectric generators, thermoelectric module, Seebeck effect, Peltier effect, Joule heating

1 Introduction

A society requires energy to function, and with an increasing population the demand for energy increases multiple fold. In order to keep up with this increasing demand for energy, we need renewable sources of energy. One such abundant source is waste heat. Thermoelectric generators harvest this low-quality waste heat energy and convert them to high quality electric energy.

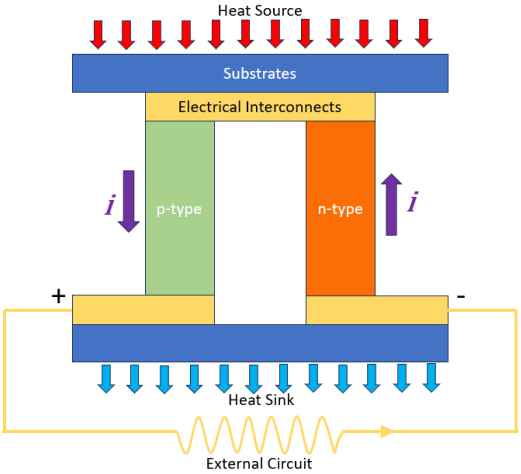

Fig. 1 Schematic of a thermoelectric module

A thermoelectric generator (TEG) works by converting heat into electricity using the Seebeck effect. When one side of the TEG is heated and the other side is cooled, a temperature gradient (ΔT) is established across the thermoelectric module. This gradient causes charge carriers in the thermoelectric materials to diffuse. In the n-type semiconductor, electrons gain thermal energy at the hot side, increasing their kinetic energy. Thus, driving them toward the cooler side, where their energy state is lower. Conversely, in the p-type semiconductor, thermal excitation at the hot side creates additional holes, which diffuse toward the cold side. These movements generate a voltage difference across the material. When the circuit is closed, this voltage drives an electric current through an external load, completing the energy conversion process as shown in figure 1. To maximize efficiency, the thermoelectric elements are arranged thermally in parallel (sharing the same heat flux) and electrically in series (to add voltages). This design ensures that the available thermal energy is utilized effectively while providing a sufficient electrical output. The efficiency of this system depends on the material properties and the magnitude of the temperature gradient.

There are four major effects that occur in a thermoelectric generator, which are explained below:

1. Thermoelectric generators (TEGs) convert a thermal potential (temperature difference) directly to an electric potential (voltage) when heat passes through the

generators [1]. This effect was first discovered in the 19th century by Seebeck [2], which can be given by the expression $\alpha = -\frac{\Delta V}{\Delta T}$ [3].

2. The Peltier effect occurs when an electric current flows through a junction of two different materials, causing heat to be absorbed at one junction and released at the other, which can be described mathematically by the Peltier coefficient as $\frac{dQ}{dt} = \Pi i$ [4]. The Peltier and Seebeck coefficients are related as $\Pi = \alpha T$ [5].
3. The Thomson effect describes the heating or cooling of a material when an electric current flows through it in the presence of a temperature gradient, which can be expressed as $\mu = T\frac{\Delta\alpha}{\Delta T}$.
4. The Joule heating effect is the production of heat in a conductor due to the flow of electric current according to the expression $\dot{Q} = i^2 R$ [6].

Thermoelectric generators are scalable systems, ranging from microwatts to kilowatts applications [7,8]. The efficiency of a TEG relative to the Carnot efficiency is typically below 5% [9]. The main advantages of TEGs compared to alternative technologies are their size, scalability, fairly simple constructions, weight and flexibility. TEGs can be used in numerous applications, such as waste heat recovery [10] and solar energy operation. For example, Bayod-Rujula et al. [11] designed and constructed presented an experimental installation consisting of two Photovoltaic-thermal hybrid solar collectors, one of them with integrated TEG modules.

In early 2000s a simplified thermal resistance model of TEG based on energy balance approach was developed by Chavez et al [12]. Later in 2009 Chen et al. [13] developed a 1-dimensional model considering only Joule and Peltier effect for waste heat recovery which provided higher accuracy than the existing thermal resistance model. Later in 2012 Wang et al. [14] developed 3-dimensional steady state model including the four major thermoelectric model for thermoelectric coolers. Meng et al. [15] later in 2014 developed 3-dimensional transient state model following the same approach as Wang et al. This paper attempts to create a 1-dimensional steady state model of thermoelectric generators taking into account the Seebeck effect, Joule effect as well as Peltier effect. The model developed uses a generalised equation applicable to all parts of the thermoelectric module. Thus, this model can be applied to more complex thermoelectric generator systems.

2 Modeling

For modeling purposes, we consider a simple thermoelectric module with one pair of p and n type semiconductors. The semiconductor pair is sandwiched between a layer of ceramics followed by a layer of copper plate. The external load is connected with the copper plates thus completing the circuit. The axis and dimensions used for the model are depicted in Fig. 2.

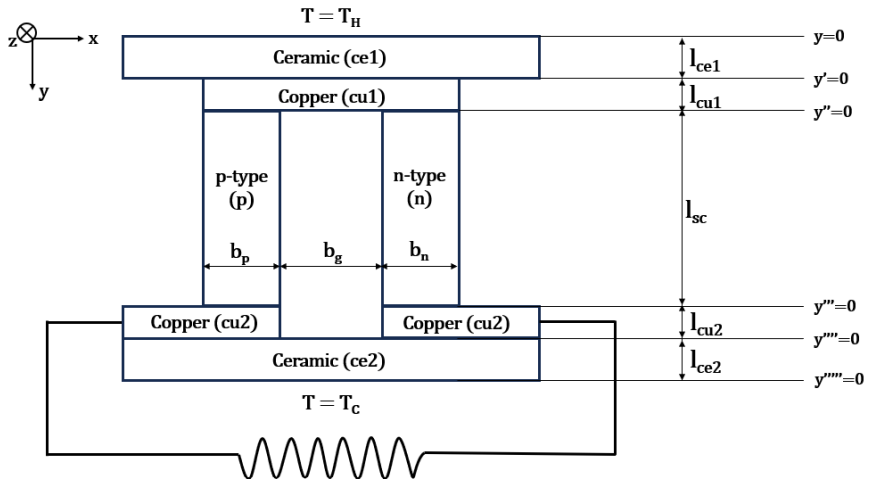

Fig. 2 Schematic of Thermoelectric Module

Assumptions In order to simplify the model, a few assumptions have been made:

- The system is assumed to be in steady state.
- The properties of thermoelectric materials like thermal conductivity, resistivity and Seebeck coefficient are assumed to be isotropic and homogenous.
- Seebeck coefficient of the semiconductors are assumed to be constant with respect to temperature.
- Convection and radiation from the TEG module are neglected.
- The TEG module is considered to be insulated. Hence losses are assumed to be zero.
- There is no variation in temperature along x and z directions.
- All kinds of other electrical losses are assumed to be zero.

Generalized Equation The generalized equation is derived from the Fourier-Biot equation:

$$\vec{\nabla}\left(k\vec{\nabla}T\right) + S = \frac{\partial(\rho C_p T)}{\partial t}.$$

Here, the heat generation is due to the current flow in an electrical field. Thus, the rate of heat generated per unit volume, S can be expressed as $S = \vec{E} \cdot \vec{J}$. Taking into account, the effects of flow of electric current, the Seebeck effect and the Thompson effect, the electric field vector is written as $\vec{E} = -\rho\vec{J} + \alpha\vec{\nabla}T + \mu\vec{\nabla}T$. Since the Thompson coefficient μ is given by $\mu = T\frac{\Delta\alpha}{\Delta T}$ and the Seebeck coefficient α is assumed to be constant with temperature, μ becomes 0. Considering the system to be in a steady state, $\frac{\partial(\rho C_p T)}{\partial t} = 0$.Thus, the generalized equation is obtained as:

$$\vec{\nabla}\left(k\vec{\nabla}T\right) + (\alpha\vec{\nabla}T - \rho\vec{J}) \cdot \vec{J} = 0.$$

Table 1. Symbols and their Notations.

Symbol	Notation
l_{ce1}	Length of top ceramic plate
l_{cu1}	Length of top copper plate
l_{sc}	Length of p and n type semiconductors
l_{cu2}	Length of bottom copper plate
l_{ce2}	Length of bottom ceramic plate
b_p	Width of p type semiconductor
b_n	Width of n type semiconductor
k_{ce}	Thermal conductor of ceramic plate
k_{cu}	Thermal conductor of copper plate
k_p	Thermal conductor of p type semiconductor
k_n	Thermal conductor of n type semiconductor
α_p	Seebeck coefficient of p type semiconductor
α_n	Seebeck coefficient of n type semiconductor
Π_p	Peltier coefficient of p type semiconductor
Π_n	Peltier coefficient of n type semiconductor
μ	Thomson coefficient
T	Temperature
J	Current density
E	Electric Field
$\dot{q}$	Heat Flux

2.1 Analytical Solution

In this section, we will carry out a component wise analysis and derive its analytical solution.

Topside Ceramic Plate There is no current flowing through the ceramic plate. Thus $\vec{J} = 0$. Since there is no variation in temperature in x and z directions, $\vec{\nabla} T = \frac{dT}{dy}$. Thus, its governing equation reduces to $k\frac{\mathrm{d}^2 T}{\mathrm{d}y^2} = 0$. On solving, the following equations are obtained:

$$\boldsymbol{a)}\ \boldsymbol{T_{ce1} = C_{1,ce1} y + C_{2,ce1}} \qquad \textbf{b)}\ \boldsymbol{\frac{dT_{ce1}}{dy} = C_{1,ce1}}$$

where, $C_{1,ce1}$ and $C_{2,ce1}$ are constants of integration. The following boundary conditions can be applied to the ceramic plate (y = 0 to y = l_{ce1}).

- The temperature at the top surface will be equal to the hot side temperature. $T_{ce1}(y = 0) = T_H$.
- Peltier effect between ceramic and copper plates is negligible hence flux leaving the bottom surface of ceramic plate will be equal to the flux entering

the top surface of the copper plate. Thus, $k_{ce}.\frac{\mathrm{d}T_{ce1}}{\mathrm{d}y}(at\ y = \mathrm{l}_{ce1}) = k_{cu}.\frac{\mathrm{d}T_{cu1}}{\mathrm{d}y}(at\ y = \mathrm{l}_{ce1})$.

Topside Copper Plate The current flows dominantly in the x direction in the copper plate. Therefore, J_y, J_z are considered to be negligible. Thus $\vec{J} = J\hat{l}$. Additionally, there is no variation in temperature in x and z directions, thus, $\vec{\nabla}T = \frac{dT}{dy}$. Seebeck effects are negligible for the copper plate and can be ignored. Therefore, the governing equation for the copper plate becomes: $k\frac{d^2T}{dy^2} - \rho J^2 = 0$. On solving, the following equations are obtained:

$$\boldsymbol{a)\ T_{cu1} = C_{1,cu1}\frac{y'^2}{2} + C_{2,cu1}y' + C_{3,cu1}\quad b)\ \frac{dT_{ce1}}{dy'} = C_{1,cu1}y' + C_{2,cu1}}$$

where, $C_{1,cu1}$, $C_{2,cu1}$ and $C_{3,cu1}$ are constants of integration and $C_{1,cu1} = \frac{\rho_{cu}J^2}{k_{cu}}$. For simplification, a new coordinate system (x, y', z) is introduced as shown in Figure 2. Here, y' = 0 lies at y = l_{ce1}.

The following boundary conditions can be applied to the copper plate (y' = 0 to y' = l_{cu1}).

- The temperature at the top surface of the copper plate will be equal to the temperature of the bottom side of the ceramic plate. $T_{cu1}(y' = 0) = T_{ce1}(y = l_{ce1})$.
- Peltier effect between ceramic and copper plates is negligible hence flux leaving the bottom surface of ceramic plate will be equal to the flux entering the top surface of the copper plate. $\frac{dT_{ce1}}{dy}(at\ y = \mathrm{l}_{ce1}) = \frac{k_{cu}}{k_{ce}} \times \frac{dT_{cu1}}{dy}(at\ y = \mathrm{l}_{ce1})$.
- Due to Peltier effect between copper plate and semiconductor, some heat flux will be absorbed at the junction when current flows from copper to p-type semiconductor and when current flows from n-type semiconductor to copper plate. Thus, $-k_{cu}(l_p + l_n)\frac{dT_{cu1}}{dy}(at\ y' = \mathrm{l}_{cu1}) = -k_p(l_p)\frac{dT_p}{dy}(at\ y' = \mathrm{l}_{cu1}) - k_n(l_n)\frac{dT_n}{dy}(at\ y' = \mathrm{l}_{cu1}) - \alpha_p T_p(at\ y' = \mathrm{l}_{cu1})l_p J_y + \alpha_n T_n(at\ y' = \mathrm{l}_{cu1})l_n J_y$.

Semiconductor In the semiconductor, the current flows dominantly in the y direction. Therefore, J_x, J_z are considered to be negligible. Thus $\vec{J} = J_y\hat{j}$. Since there is no variation in temperature in x and z directions, $\vec{\nabla}T = \frac{dT}{dy}$. Thus, the governing equation is: $\frac{d^2T}{dy^2} + \frac{\alpha J}{k}\frac{dT}{dy} - \frac{\rho J^2}{k} = 0$. It can be expressed in the form: $\frac{d^2T}{dy^2} + A\frac{dT}{dy} + B = 0$. where, $A = \frac{\alpha J}{k}$ and $B = -\frac{\rho J^2}{k}$. For simplification, a new coordinate system (x, y'', z) is introduced as shown in Figure 2. Here, y'' = 0 lies at y' = l_{cu1}. On solving, the following equations are obtained:

a) $\boldsymbol{T = C_1 \frac{e^{-Ay''}}{A^2} - \frac{B\,y''}{A} + C_2}$ **b)** $\boldsymbol{\frac{dT}{dy}} = \frac{C_1}{-A} e^{-Ay''} - \frac{B}{A}$

where, C_1 and C_2 are constants of integration. The above equations can be applied to both p and n type semiconductors. The following boundary conditions can be applied to the semiconductors (y'' = 0 to y'' = l_{sc}):

- The temperature at the top surface of the semiconductor will be equal to the temperature of the bottom surface of the copper plate. Thus, $T_p(y'' = 0) = T_{cu1}(y' = \mathrm{l}_{cu1})$ and $T_n(y'' = 0) = T_{cu1}(y' = \mathrm{l}_{cu1})$.
- Due to Peltier effect between topside copper plate and semiconductor, some heat flux will be absorbed at the junction when current flows from copper to p-type semiconductor and when current flows from n-type semiconductor to copper plate. Thus, $-k_{cu}(l_p + l_n)\frac{dT_{cu1}}{dy}(at\ y'' = 0) = -k_p(l_p)\frac{dT_p}{dy}(at\ y'' = 0) - k_n(l_n)\frac{dT_n}{dy}(at\ y'' = 0) - \alpha_p T_p(at y'' = 0) l_p J_y + \alpha_n T_n(at\ y'' = 0) l_n J_y$.
- Due to Peltier effect between bottom side copper plate and semiconductor, some heat flux will be generated at the junction when current flows from p-type semiconductor to copper and when current flows from copper plate to n-type semiconductor. Thus, $-k_{cu}(l_p + l_n)\frac{dT_{cu1}}{dy}(at\ y'' = \mathrm{l}_{sc}) = -k_p(l_p)\frac{dT_p}{dy}(at\ y'' = \mathrm{l}_{sc}) - k_n(l_n)\frac{dT_n}{dy} - \alpha_p T_p(at\ y'' = \mathrm{l}_{sc}) l_p J_y + \alpha_n T_n(at\ y'' = \mathrm{l}_{sc}) l_n J_y$.

Similarly, expressions for bottom side Copper and Ceramic plates can be obtained.

From the above, 14 equations are obtained which are used to solve for the 14 unknowns (namely $C_{1,ce1}$, $C_{2,ce1}$, $C_{1,cu1}$, $C_{2,cu1}$, $C_{3,cu1}$, $C_{1,p}$, $C_{2,p}$, $C_{1,n}$, $C_{2,n}$, $C_{1,cu2}$, $C_{2,cu2}$, $C_{3,cu2}$, $C_{1,ce2}$, $C_{2,ce2}$) in terms of the current density J.

Current Generated From conservation of energy, net heat energy flowing into the semiconductor is equivalent to the electrical energy generated in the electrical circuit. Thus,

$$-k_{ce} n(l_p + l_n) b C_{1,ce1} + k_{ce} n(l_p + l_n) b C_{1,ce2} - \alpha_n I n\left(C_{2,n} - \frac{C_{1,n}}{{A_n}^2}\right) + \alpha_p I n\left(C_{2,p} - \frac{C_{1,p}}{{A_p}^2}\right) - \alpha_p I n\left(C_{2,p} - \frac{B_p}{A_p} l_{sc} - \frac{C_{1,p} e^{(-A_p l_{sc})}}{{A_p}^2}\right) + \alpha_n I n\left(C_{2,n} - \frac{B_n}{A_n} l_{sc} - \frac{C_{1,n} e^{(-A_n l_{sc})}}{{A_n}^2}\right) = I^2 R_L$$

where, n = number of n-p pairs (thermocouples) in the TEG and b is width of the TEG module.

The above equation is numerically solved using Newton-Raphson method in order to obtain the value of current (I). Once the current value is obtained, the values of constants can be calculated. And thereafter total output power and efficiency can be calculated using the following formulas.

Power output (P) = $I^2 R_L$

and, Efficiency (η) = $\frac{I^2 R_L}{-k_{ce} n(l_p + l_n) b C_{1,ce1}}$

3 Result and Discussion

For the purpose of numerical simulation, three different materials i.e. Bismuth Telluride (Bi_2Te_3), Lead Telluride (PbTe) and Antimony Telluride (Sb_2Te_3) were taken as both p-type and n-type semiconductors. The properties corresponding to p-type and n-type Bi_2Te_3, PbTe and Sb_2Te_3 considered for numerical simulation, have been listed below in the following tables.

Table 2. Properties of Bi_2Te_3

Properties	Bi2Te3 (P-type)	Bi2Te3 (N-type)
Seebeck coefficient (α)	190×10^{-6} V/K	-190×10^{6} V/K
Thermal conductivity (k)	1.66 W/m.K	1.66 W/m.K
Specific resistance (ρ)	1.5×10^{-5} Ωm	1.5×10^{-5} Ωm
Width (l)	5 mm	5 mm

Table 3. Properties of PbTe

Properties	PbTe (P-type)	PbTe (N-type)
Seebeck coefficient (α)	210×10^{-6} V/K	-210×10^{6} V/K
Thermal conductivity (k)	1.75 W/m.K	1.75 W/m.K
Specific resistance (ρ)	0.8×10^{-5} Ωm	0.8×10^{-5} Ωm
Width (l)	5 mm	5 mm

Table 4. Properties of Sb_2Te_3

Properties	Sb_2Te_3 (P-type)	Sb_2Te_3 (N-type)
Seebeck coefficient (α)	230×10^{-6} V/K	-230×10^{6} V/K
Thermal conductivity (k)	1.85 W/m.K	1.85 W/m.K
Specific resistance (ρ)	1.1×10^{-5} Ωm	1.1×10^{-5} Ωm
Width (l)	5 mm	5 mm

Table 5. Values of other simulation parameters

Thermal conductivity of ceramic plate (k_{ce})	230 W/m.K	Thermal conductivity of copper plate (k_{cu})	398 W/m.K
Thickness of the ceramic plate (l_{ce})	2 mm	Thickness of the copper plate (l_{cu})	3 mm
Gap between p-type and n-type legs (l_g)	Negligible	Thickness of the semiconductor (l_{sc})	15 mm – 25 mm
No. of N-P pairs (n)	100 - 300	Specific Resistance of copper (ρ_{cu})	1.68×10^{-8} Ωm

Varying Load Resistance (RL) from 50 Ohm to 150 Ohms The corresponding variation in electrical power output and efficiency is shown in Figure 4. It can be seen that the output power and efficiency decrease exponentially with increase in load resistance in the external circuit for all three semiconductors. This happens because with increase in load resistance, current flowing through the circuit reduces, which causes output power to reduce and thus the efficiency of TEG.

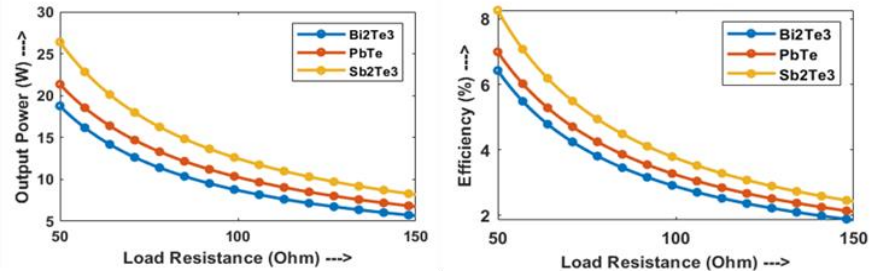

Figure 3: Variation of (a) Output power and (b) Efficiency of Bi_2Te_3, PbTe and Sb_2Te_3 TEG with load resistance (R_L) in the external circuit. Temperature at the hot side and cold side of the TEG are taken to be 800 K and 300 K, respectively. Length of the semiconductor legs are taken as 20 mm. and no. of Thermoelectric modules are taken to be 150.

Varying Hot Side Temperature (TH) from 500 K to 1300 K Next, the hot side temperature has been varied from 500 K to 1300 K and the corresponding variation in electrical power output and efficiency has been observed and produced below.

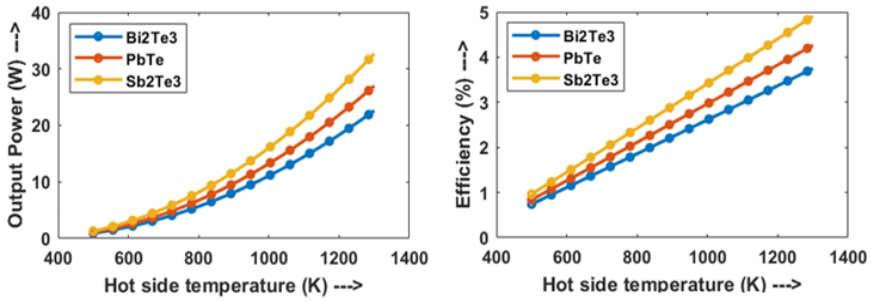

Figure 4: Variation of (a) Output Power and (b) Efficiency of Bi_2Te_3, PbTe and Sb_2Te_3 TEG with temperature at the hot side. Temperature at the cold side of the TEG is taken to be 300 K. Length of the semiconductor legs are taken as 20 mm. No. of Thermoelectric modules are taken to be 150 and load resistance is considered to be 150 Ohms.

As the hot side temperature increases, total power output as well as efficiency increases. The rate of increase is highest in Sb_2Te_3, and lowest in Bi_2Te_3 among the three materials considered. The main reason for that is, with increase in hot side temperature while keeping the cold side temperature constant, the heat influx increases, which increases Seebeck coefficient value, which in turn increases the current and thus the output power and efficiency.

Varying Cold Side Temperature (T_C) from 300 K to 500 K Now, the cold side temperature has been varied from 300 K to 400 K and the corresponding variation in electrical power output and efficiency has been plotted, which is depicted below.

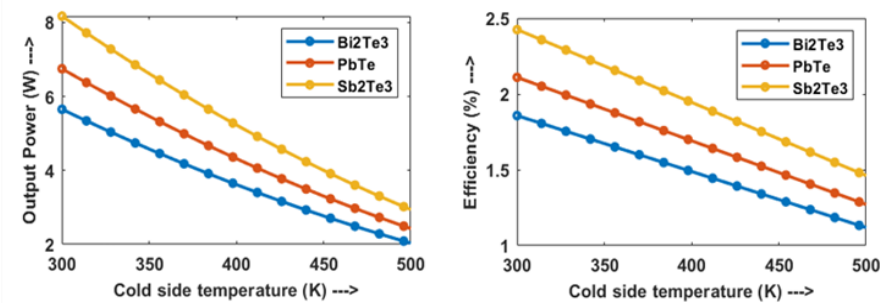

Figure 5: Variation of (a) Output Power and (b) Efficiency of Bi_2Te_3, PbTe and Sb_2Te_3 TEG with temperature at the cold side. Temperature at the hot side of the TEG is taken to be 800 K. Length of the semiconductor legs are taken as 20 mm. No. of Thermoelectric modules are taken to be 150 and load resistance is considered to be 150 Ohms.

Here as the cold side temperature increases, the temperature difference between both ends of the thermoelectric generator decreases, which the potential difference developed between both ends of the semiconductor, as result the output power decreases. Now, the heat influx also reduces with increase in temperature at the cold side of the TE module, but due to higher decrease in output power, the overall efficiency reduces.

Varying Semiconductor Height (l_{sc}) from 15mm to 25mm Next, the thickness of the semiconductor has been varied from 15 mm to 25 mm and the corresponding variation in electrical power output and efficiency has been plotted, which is shown in the Figure 6. With increase in semiconductor thickness, overall power output and efficiency both is seen to be increasing. It may be due to the fact that with increase in semiconductor's height, the overall number of charge carriers increases which results in a higher potential difference between the ends. Furthermore, the rate of increase in efficiency is found to be found to be more compared to the output power since with increase in semiconductor height because of fixed hot side temperature, heat input at the hot side reduces, but the output power is found to be slightly increasing, which results in a very high rate of increase in efficiency.

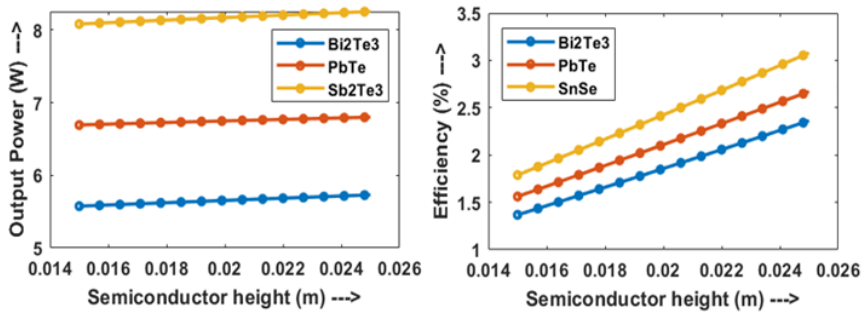

Figure 6: Variation of (a) Output Power and (b) Efficiency of Bi_2Te_3, PbTe and Sb_2Te_3 TEG with height of the semiconductor legs. Temperature at the hot side and cold side of the TEG are taken to be 800 K and 300 K, respectively. No. of Thermoelectric modules are taken to be 150 and load resistance is considered to be 150 Ohms.

Varying number of n-p pairs (n) from 100 to 300 Finally, the number of N-P pairs i.e. thermoelectric modules have been varied from 200 to 300 and the corresponding variation in the electrical output power and efficiency as obtained through the numerical simulation of the model have been plotted below.

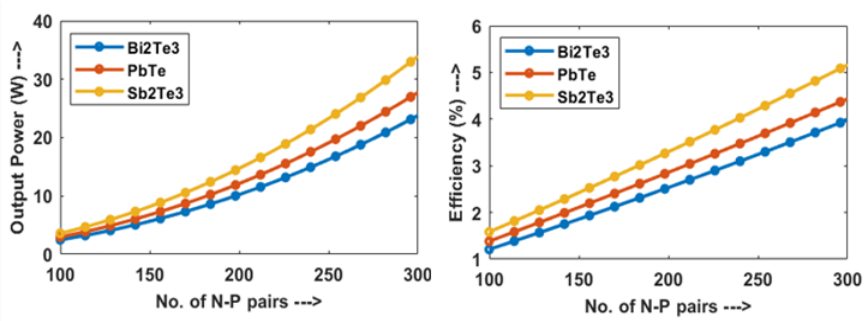

Figure 7: Variation of (a) Output Power and (b) Efficiency of Bi_2Te_3, PbTe and Sb_2Te_3 TEG with the number of Thermoelectric modules. Temperature at the hot side and cold side of the TEG are taken to be 800 K and 300 K, respectively. Length of the semiconductor legs are taken as 20 mm and load resistance is considered to be 150 Ohms.

From the above plot, it can be seen that with increase in number of thermocouples, power output of different TEGs increases, which is obvious as with more no. of thermocouples, power generated will be more than the power generated by a single thermocouple. Again, with increase in thermocouples, heat influx increases but the increase in output power is more prominent as some of the heat that could be lost, can be regained by the close spacing of the thermocouples, which increases the efficiency.

4 Conclusion

The study systematically modelled and analyzed the thermoelectric generator (TEG), which focuses on the potential to convert waste heat to electrical energy. The mathematical structure includes the main thermoelectric effects including Seebeck, Peltier and Joule Effects, providing a fully understanding of the interaction between heat and electrical phenomena in the TEG system. The analytical solution was obtained for each TEG component, and validated through numerical solutions to evaluate the effect on the output power and efficiency of the design and operating parameters.

- Increasing the hot-side temperature or semiconductor height significantly enhances power output and efficiency.
- Higher cold-side temperatures reduce the temperature gradient, resulting in lower output and efficiency.
- Larger external load resistances negatively impact performance due to reduced current flow.
- Increasing the number of thermoelectric module pairs proportionally increases power output, demonstrating scalability.

References

[1] Harman TC, Honig JM. Thermoelectric and thermomagnetic effects and applications. New York: McGraw-Hill; 1967.

[2] Seebeck TJ. Magnetiche polarisation der metalle und erze durch temperaturdifferentz. Abh Kn Akad Wiss 1822:265e373.

[3] Naito, M. (2018). Nanoparticle technology handbook. Elsevier.

[4] Drebushchak, V. A. (2007). The Peltier effect. Journal of Thermal Analysis and Calorimetry, 91(1), 311–315. https://doi.org/10.1007/s10973-007-8336-9.

[5] Tritt, T. (2002). Thermoelectric Materials: principles, structure, properties, and applications. In Elsevier eBooks (pp. 1–11). https://doi.org/10.1016/b0-08-043152-6/01822-2 .

[6] Meseguer, J., Pérez-Grande, I., & Sanz-Andrés, A. (2012). Spacecraft thermal control. Elsevier.

[7] Huesgen T, Woias P, Kockmann N. Design and fabrication of MEMS thermoelectric generators with high temperature efficiency. Sens Actuat A-Phys 2008;145e146(1e2):423e9.

[8] Fleurial J-P. Thermoelectric power generation materials: technology and application opportunities. JOM 2009;61(4):79e85.

[9] Zebarjadi M, Esfarjani K, Dresselhaus MS, Ren ZF, Chen G. Perspectives on thermoelectrics: from fundamentals to device applications. Energy Environ Sci 2012;5:5147e62.

[10] D. Luo, R. Wang, W. Yu, W. Zhou, A novel optimization method for thermoelectric module used in waste heat recovery, Energy Convers. Manage. (2020), doi: 10.1016/j.enconman.2020.112645.

[11] A.A. Bayod-R ujula, A. Martínez-Gracia, A.D. Amo, M. Ca nada, S. Us ~ on, J. Uche, J.A. Tejero, Integration of thermoelectric generators (TEG) in Solar PVT panels, Int. Conf. Renew. Energies Power Qual. 17 (2019).

[12] Chavez JA, Ortega JA, Salazar J, Turo A, Garcia MJ. SPICE model of thermoelectric elements including thermal effects. Proceedings of the 17th IEEE Instrumentation and Measurement Technology Conference [Cat No 00CH37066] 2000. p. 1019-23 vol.2.
[13] Chen M, Rosendahl LA, Condra TJ, Pedersen JK. Numerical Modeling of Thermoelectric Generators With Varing Material Properties in a Circuit Simulator. IEEE Trans Energy Convers 2009;24:112-24.
[14] Wang X-D, Huang Y-X, Cheng C-H, Ta-Wei Lin D, Kang C-H. A three-dimensional numerical modeling of thermoelectric device with consideration of coupling of temperature field and electric potential field. Energy 2012;47:400-97.
[15] Meng J-H, Zhang X-X, Wang X-D. Dynamic response characteristics of thermoelectric generator predicted by a three-dimensional heat-electricity coupled model. J Power Sources 2014;245:262-9.