AccuRange AR2700™ Laser Sensor

User's Manual

Rev 1.0.2
For use with AR2700™

Acuity
A product line of Schmitt Industries, Inc.
2765 NW Nicolai St.
Portland, OR 97210
www.acuitylaser.com

Limited Use License Agreement

CAREFULLY READ THE FOLLOWING TERMS AND CONDITIONS BEFORE OPENING THE PACKAGE CONTAINING THE PRODUCT AND THE COMPUTER SOFTWARE LICENSED HEREUNDER. CONNECTING POWER TO THE MICROPROCESSOR CONTROL UNIT INDICATES YOUR ACCEPTANCE OF THESE TERMS AND CONDITIONS. IF YOU DO NOT AGREE WITH THE TERMS AND CONDITIONS, PROMPTLY RETURN THE UNIT WITH POWER SEAL INTACT TO THE DEALER FROM WHOM YOU PURCHASED THE PRODUCT WITHIN FIFTEEN DAYS FROM DATE OF PURCHASE AND YOUR PURCHASE PRICE WILL BE REFUNDED BY THE DEALER. IF THE DEALER FAILS TO REFUND YOUR PURCHASE PRICE, CONTACT SCHMITT INDUSTRIES, INC. IMMEDIATELY AT THE ADDRESS SET OUT BELOW CONCERNING RETURN ARRANGEMENTS.

Schmitt Industries, Inc. provides the hardware and computer software program contained in the microprocessor control unit. Schmitt Industries, Inc. has a valuable proprietary interest in such software and related documentation ("Software), and licenses the use of the Software to you pursuant to the following terms and conditions. You assume responsibility for the selection of the product suited to achieve your intended results, and for the installation, use and results obtained.

License Terms And Conditions

a. You are granted a non-exclusive, perpetual license to use the Software solely on and in conjunction with the product. You agree that the Software title remains with Schmitt Industries, Inc. at all times.
b. You and your employees and agents agree to protect the confidentiality of the Software. You may not distribute, disclose, or otherwise make the Software available to any third party, except for a transferee who agrees to be bound by these license terms and conditions. In the event of termination or expiration of this license for any reason whatsoever, the obligation of confidentiality shall survive.
c. You may not disassemble, decode, translate, copy, reproduce, or modify the Software, except only that a copy may be made for archival or back-up purposes as necessary for use with the product.
d. You agree to maintain all proprietary notices and marks on the Software.
e. You may transfer this license if also transferring the product, provided the transferee agrees to comply with all terms and conditions of this license. Upon such transfer, your license will terminate and you agree to destroy all copies of the Software in your possession.

Procedures for Obtaining Warranty Service

1. Contact your Acuity distributor or call Schmitt Industries, Inc. to obtain a return merchandise authorization (RMA) number within the applicable warranty period. Schmitt Industries will not accept any returned product without an RMA number.

2. Ship the product to Schmitt Industries, postage prepaid, together with your bill of sale or other proof of purchase. your name, address, description of the problem(s). Print the RMA number you have obtained on the outside of the package.

This device has been tested for electromagnetic emissions and immunity and has been found to be in compliance with the following directives for class A equipment:

EN 62500-6-2:2002
EN 55011:2000

This device complies with part 15 of the FCC Rules. Operation is subject to the following two conditions:

(1) This device may not cause harmful interference, and (2) this device must accept any interference received, including interference that may cause undesired operation.

Note: This equipment has been tested and found to comply with the limits for a Class A digital device, pursuant to part 15 of the FCC rules. These limits are designed to provide reasonable protection against harmful interference when the equipment is operated in a commercial environment. This equipment generates, uses, and can radiate radio frequency energy and, if not installed and used in accordance with the instruction manual, may cause harmful interference to radio communications. Operation of this device in a residential area is likely to cause harmful interference in which case the user will be required to correct the interference at his or her own expense.

This manual copyright © 2021, Schmitt Industries, Inc.

User's Manual for the
AR2700™ Series Laser Sensor

Table of Contents

1. Introduction 1
   1.1 General Overview 2
   1.2 Definition of Terms 2
   1.3 Quick Start Instructions 3
      1.3.1 Mounting 3
      1.3.2 Serial Data Wires 3
      1.3.3 Analog Output Signals 3
      1.3.4 Alarm Signal 4
   1.4 General Description 4
   1.5 Principles of Operation 4
   1.6 Mechanical Dimensions 5
      1.6.1 AR2700 sensor unit 5
   1.7 Installation 5
   1.8 Laser Safety 6
   1.9 Sensor Maintenance 6
   1.10 Sensor Service 6
2. Installation and Checkout 7
   2.1 Mounting 7
   2.2 Cabling for sensor unit 7
      2.2.1 Standalone Cabling 7
      2.2.2 Serial Connection to a Host Computer 7
   2.3 Power On 8
   2.4 Verifying Operation 9
   2.5 Troubleshooting 9
      2.5.1 Serial Communications Check 9
      2.5.2 Sensor Output Check 10
3. Signal and Power Interface 10

3.1 Sensor Unit 10
3.1.1 Sensor Cable, Wire Colors and Functions 10
3.1.2 Power Supply (Red, Blue) 11
3.1.3 RS232 Serial Communications (Green, Gray) 11
3.1.4 RS422 Serial Communications (Green, Pink, Yellow, Grey) 12
3.1.5 Analog Output (Grey/Pink, Red/Blue) 12
3.1.6 Alarm Outputs Q1 and Q2 (Brown, Black) 13
3.1.7 Trigger Input and Output (Violet) 13
4. Serial Interface Operation 15
4.1 Serial Hardware Interface 15
4.1.1 Communications Protocol 15
4.1.2 Identification (ID) 16
4.1.3 Online Help (ID?) 16
4.1.4 Configuration Parameters Display (PA) 17
4.1.5 Baud Rate (BRx) 17
4.1.6 Serial Data Format (SDx y) 18
4.1.7 Terminator (TEx) 20
4.1.8 Temperature Query (TP) 20
4.1.9 Parameter Reset (PR) 20
4.1.10 Device Reboot (DR) 20
4.1.11 Auto Start (ASx) 21
4.2 Error Mode (SEx) 21
5. Analog Output Operation 21
5.1 Setting the range beginning and end points (QAx y) 22
6. Alarm Output(s) Operation (Q1, Q2) 22
6.1 Setting the alarms (Q1w x y z or Q2w x y z) 23
7. Performance Optimization 23
7.1 Measurement Modes 23
7.1.1 Distance Tracking Mode (DT) 23
7.1.2 Single Distance Measurement (DM) 24
7.2 Measurement Frequency (MFx) 24
7.3 Averaging Value (SAx) 24
7.4 Measurement Window (MWx y z) 24
7.5 Distance Offset (OFx) 25
7.5.1 Set current measurement to Distance Offset (SO) 25

7.6 Select Target (STx) 25
7.7 Trigger Input (TIx y) 25
7.8 Trigger Output (TOx) 26
7.9 Gain (GNx) 26
7.10 Time Calibration (TCx).....26
8. Serial Command Quick Reference 27

1. Introduction

This section is a guide to getting started with the AR2700 and this manual. The AR2700 has a number of configurable parameters, but many applications can use the sensor in its default factory configuration. This manual contains information for both the AR2700 sensor unit and the AR2700 module.

The recommended order for reading the manual is:

- General Overview – Gives a brief understanding of the sensor operation.
- Operating Guidelines – Provides a few important safety tips.
- Definition of Terms – An aid for proper communication.
- Quick Start Instructions – This should provide the information necessary to connect the sensor and verify its operation, either with a serial terminal program at 9600 baud, or by connecting the current loop or Alarm Output interface.
- General Description – Gives important laser, operation, mechanical, and mounting information.
- Installation and Checkout – Tailor the application. Use the other chapters for reference:
  Signal and Power Interface – how to hook everything up
  Serial Interface Operation – modes, formats, bias
  Analog Output Operation – current loop, voltage, scaling
  Alarm Output Operation – alarm settings
  Performance Optimization – Sample Rate, Background Elimination, Exposure control
  AR2700 Command Set – explains all commands for customizing the application

1.1 General Overview

The AR2700 is a time-of-flight rangefinder that measures distance using an infrared (invisible) laser beam, a photodiode, and a microprocessor. The rangefinder works based on comparative phase measurement by emitting modulated high-frequency light which is diffusely reflected back from the target with a certain shift in phase. This return signal is compared with a reference signal. From the amount of phase shift, a resulting distance is determined with great accuracy. The maximum range measurement for the device is 885 feet (270 m) using special reflective targets. On normal surfaces with low reflectivity, the maximum range is 230 feet (70 m). The Class 1 infrared laser diode makes the rangefinder eye safe for use in all environments. The model is designed for fast measurement speeds, up to 40 KHz, making it ideal for tracking the position of moving targets. Speed and accuracy performances vary depending on target surface reflectance. The AR2700 technical data sheet specifies sensor performance standards.

A variety of configuration settings can be selected via the serial port. The complete list of settings is found in the AR2700 Command Set chapter and each setting is discussed in detail in a specific operation chapter.

The Sample Rate can be specified and the sensor has maximum capability of 40,000 samples per second. Sampling may be turned on and off. It can even be triggered using an input signal wire or a serial command.

Measurement output can be in the form of serial data (RS232 or RS422) or Analog Output (4-20mA current loop).

Do not attempt to disassemble the sensor or loosen any screws. Improper disassembly will destroy the optical alignment of the sensor and necessitate factory repairs.

Do not operate the sensor in areas where the sensor case is exposed to direct sunlight for extended periods or where the air temperature is more than 60°C (140°F) or less than -20°C (-4°F).

Don't allow fast temperature variations during sensor operation.

Avoid excessive vibration and shocks. The sensor contains securely mounted but precisely aligned optical components.

Do not operate the sensor if the lens is fogged or dirty.

Do not scratch the lenses on the front face of the sensor. Keep the lenses clean with expert optical procedures. The lenses are glass with an anti-reflection coating. Avoid the use of organic cleaning solvents.

Do not touch the lenses with bare fingers. The oils are very difficult to remove.

Operate only with DC supply voltages up to 30 volts.

1.2 Definition of Terms

Sensor – The complete AR2700 measurement device.

Target – The object of measurement. The relative distance from the sensor to the target is measured by the sensor.

Laser, Laser beam – This bright light is emitted from the sensor, reflected from the target, and collected by the camera lens. For the AR2700, it is infrared radiation.

<Range> – The maximum relative distance measurable by the sensor.

1.3 Quick Start Instructions

This will get the sensor running in its factory default configuration.

Only one output type (Serial or Analog) is needed to transmit measurement data.

1.3.1 Mounting

This section refers to the mechanical fixture of the AR2700 sensor.

Quick suggestion: Lay the sensor on the floor or a table. It may need to be held in place with a clamp or a weight. Orient the laser so that the laser is not obstructed. Use a piece of paper such as a business card to insert into the beam to use as a measurement target. The laser should be aimed at a target such that the distance from the reference point to the target can be measured. The infrared laser spot can be viewed with a digital (CCD) camera.

Mount the sensor in such a way that the case is not twisted or warped.

Attach the cable's 12-pin connector to the plug on the rear of the sensor.

Connect the red (Supply +) and blue (Supply Voltage Ground) wires of the sensor cable to a 10 to 30 volt DC power supply (or use the power supply if the sensor came with one).

1.3.2 Serial Data Wires

The serial connection is required to set up a unit for operation. If not using the Acuity Connectivity kit which includes a serial cable, the customer must make their own D-sub 9 serial connector

1.3.2.1 RS232 serial

Connect the RS232 wires to a 9 pin D-SUB male connector that can be plugged into a COM port of a PC (RS232): Red / Blue (Signal Ground) to pin 5, Green (Transmit) to pin 2, and Gray (Receive) to pin 3. See section 2.2.2.

Start a terminal emulator on the PC and set it for that COM port at 115200 baud, 8 bit, 1 stop, parity: none, no flow control.

1.3.2.2 RS422 serial

Connect the RS422 wires to a RS422 adapter connected to a PC COM port. See section 2.2.2.

Start a terminal emulator on the PC and set it for that COM port at 115200 baud, 8 bit, 1 stop, parity: none, no flow control.

The sensor defaults in distance-tracking mode (DT) with metric units and you should see distance measurements scroll down the screen.

1.3.3 Analog Output Signals

Quick suggestion: connect a DVM (digital volt meter) to the wires: Blue to Common, Grey / Pink to mA input. Type QA. The output is a 4-20mA current loop from 0 to 1.00 meters. The meter should read near 4 mA when a target is placed in the laser beam near 0 meters and 20 mA near 1.0 meters

1.3.4 Alarm Signal

Quick suggestion: connect the Alarm 1 signal wire (brown) to a 1K resistor in series with an LED, anode to the resistor, cathode to ground (blue).

The default action is: Alarm will go active (LED lights) if a target is measured at a distance greater than 1m.

1.4 General Description

The AR2700 is a laser diode based distance measurement sensor for ranges up to 230 feet (70 m) on regular surfaces with as little as 10% reflectivity and up to 885 feet (270 m) using a reflective target. Contact Acuity for these targets. The accuracy is generally specified with an absolute linearity of +/- 2.36 inches (60 mm) and a 1 sigma repeatability of +/- 0.98 inches (25 mm). Linearity will vary depending on sample averaging, temperature and surface reflectivity of the target surface. Measurement noise to a stationary target of 50% reflectivity was reduced to 3 mm at 100 Hz sampling speeds. The AR2700 internally compensates for temperature changes, but does not have an on-board heater for use in cold environments.

1.5 Principles of Operation

The AR2700 uses the time of flight of light to measure distance. The laser beam is projected from the housing's aperture and shines on a target surface, where it creates a small infrared spot. From there the laser light is reflected back to the sensor. A collection lens is located in the sensor to the side of the laser aperture. It collects a portion of the reflected light, which is focused on an avalanche photodiode and converted to an electrical signal. The signal is amplified and symbolizes a shift in phase. This phase is compared to a reference signal to determine the amount of shift and hence a change in distance.

1.6 Mechanical Dimensions

1.6.1 AR2700 sensor unit

The following diagram shows the mechanical dimensions for the AR2700. The sensor unit has four M3 threaded holes on the bottom, three M3 threaded holes on the side, and two M3 threaded holes on the face for mounting to a bracket. The cable is for power and all communications (serial, analog, trigger, power, etc.). It is a 12-pin M12 male connector (Binder series 713). The outer case of the sensor is extruded aluminum with anodization for corrosion resistance.

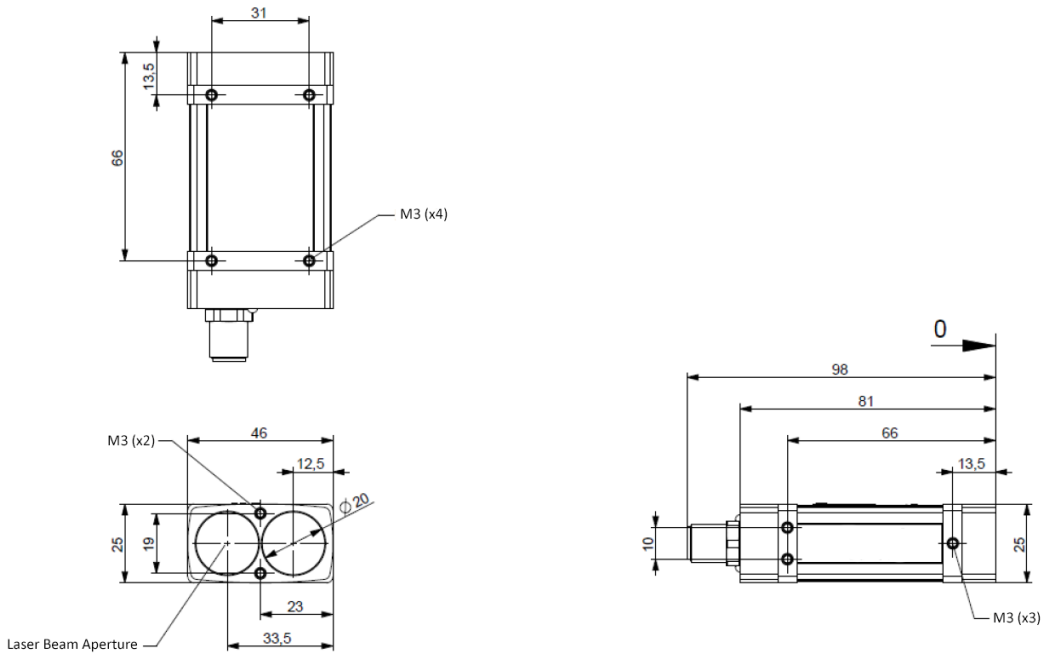

1.7 Installation

The AR2700 sensor unit is typically installed by affixing the sensor to a machined bracket with threaded bolts through the mounting holes on the bottom, side, and face of the sensor. Their location is shown in the mechanical drawing in section 1.6.1. Note that the zero point is the front edge of the case. Most brackets will have adjustment capabilities so the AR2700's laser can be aimed in X, Y and Z coordinates.

1.8 Laser Safety

Installers of laser sensors should follow precautions set forth by ANSI Z136.1 Standard for the Safe Use of Lasers or by their local safety oversight organization. The AR2700 is a class 1 (eye safe) laser product as stipulated in IEC 60825-1/DIN EN 60825-1:2001-11 and a class 1 product under FDA 21CFR. As the laser is 905 nm wavelength, the human eye has no aversion response (blinking), but there is no hazard to the eye at this laser class.

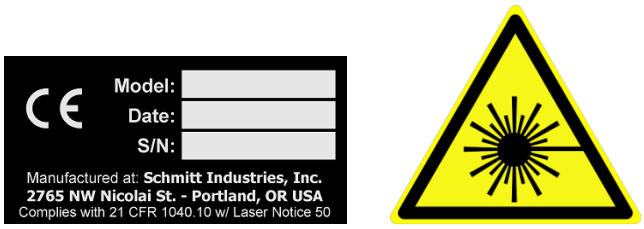

Figure 1 AR2700 laser safety labels

1.9 Sensor Maintenance

The AR2700 sensor and module require little maintenance from the user. The sensor lens should be kept clean of dust buildup as a part of regular preventative maintenance. Use compressed air to blow dirt off the window or use delicate tissue wipes. Do not use any organic cleaning solvents on the sensor. If your sensor does not function according to specifications, contact Schmitt Industries, Inc. Do not attempt to loosen any screws or open the sensor housing.

1.10 Sensor Service

The AR2700 sensor is not user-serviceable. Refer all service questions to Schmitt Industries, Inc. Do not attempt to loosen any screws or open the sensor housing.

2. Installation and Checkout

2.1 Mounting

Mount the sensor in such a way that the case or circuit board is not twisted or warped. Using three hard points along the front and back edges or a slightly compliant mounting system are the best methods. Do not clamp or squeeze the sensor case excessively. If the case is distorted, the sensitivity and accuracy of the sensor may be affected.

2.2 Cabling for sensor unit

The AR2700 sensor unit has a multipurpose cable with 12 conductors (sold separately).

The standard cable is LiYCY (TP) a flexible, overall shielded, PVC twisted-pair data transmission cable for use in flexible and stationary applications under low mechanical stress with free movement without any tensile stress, loads or forced movements in dry, damp and wet conditions. The twisted pair construction reduces interference (crosstalk) within the cable while the tinned copper braid shield offers optimum protection from electrical and electromagnetic interference. Not suggested for outdoor use.

The standard cable length is 6.6 feet (2 m) and longer cable lengths are available. Connection and termination according to the instructions is essential for correct sensor operation. Read the wire descriptions in Section 3.1.1 for connection information.

2.2.1 Standalone Cabling

To use the AR2700 sensor unit without a serial connection to a host computer, the only connections necessary are the power and ground wires, the analog output wires, and optionally the alarm output wire connecting to your data display, recording, or control equipment. See Signal and Power Interface (section 3) for wire connections. In its default configuration, the AR2700 should measure distances on power-up (Autostart in DT mode).

In 4-20mA analog output mode, the best accuracy and linearity for the current loop is obtained with a 500-ohm load to current loop return at the measurement point. An out-of-range current indicates a sensor measurement error.

The alarm output wire can be used to connect to control equipment.

2.2.2 Serial Connection to a Host Computer

The simplest way to connect the AR2700 sensor to a PC computer for initial configuration or regular distance measuring is with the use of an Acuity Connectivity Kit. This is a sealed connection box which contains terminal blocks for each wire lead. It also has an AC power supply and a 2m RS232 serial cable for connection to a PC. Without the Acuity connectivity kit, the user must connect a DB9 plug to the cable using the directions below.

RS232: A 9-pin serial D-sub serial connector can be attached to the serial output wires to connect the AR2700 directly to an PC 9-pin serial port.

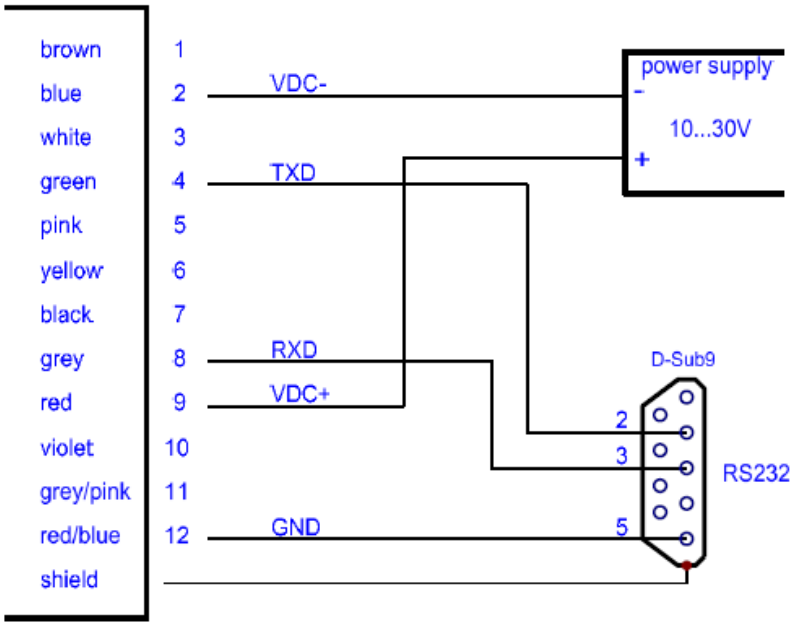

Figure 2 Wiring configuration for 9-pin connector for RS232 serial communications

RS422: An RS422 adapter must be used to connect the AR2700 to a PC. See the wire functionality chart in section 3 for details.

For testing use a terminal emulation program such as HyperTerminal or TeraTerm.

After naming the connection and choosing an icon, choose the COM port that the AR2700 is connected to. In the next configuration screen, set to 112500 baud, 8 bits, NO parity, 1 stop bit and NO flow control to communicate with a sensor in the default configuration.

2.3 Power On

Connect a 15 volt (10 – 30 volts) power supply to the power and ground lines of the sensor cable. See Signal and Power Interface (section 3) for wire connections. Only the power and ground need be connected for operation in addition to the serial interface.

When power is applied the laser beam will be emitted from the bottom half of the sensor's window. The sensor will immediately begin measuring in *Distance Tracking* mode. Distance readings will scroll down the terminal emulator and the default units are be in meters. See section 4.1 for command information.

2.4 Verifying Operation

In default DT (distance tracking) mode, the AR2700 transmits approximately 10 samples per second (10,000 Hz with 1000 Averaged samples) at 112500 baud over the serial signals, and transmits measured distance over the current loop output at the same update rate. The actual measurement speed will depend upon the selected measurement mode and the reflectance of the target surface. The current loop should put out 4 mA at the near end of the measurement range, and 20 mA at the far end. Check either, or both, signals to verify basic sensor operation.

2.5 Troubleshooting

The sensor displays simple error indications using its function display LEDs. Trouble shooting steps are shown below:

Symptom	Possible Cause	Correction
No laser light and no sample data	Sampling is turned off Power supply voltage is too low	Turn Sampling on Check power supply input voltage
Serial port not responding	Power supply voltage is too low Baud rate incorrect or unknown	Check power supply input voltage See section 4.1.5
Error code (E02) is transmitted on serial port	Measurement outside of Measurement Window (MW). AR2700 unable to see target	See section 7.4 for configuring MW

2.5.1 Serial Communications Check

If no information is received over the serial port, check the power supply and serial wire connections. The sensor may be in a configuration that prevents serial communication, such as being set at the wrong baud rate.

Type PR<Enter> to reset the sensor to the factory defaults (including 115200 baud rate). If the sensor's baud rate is unknown, then the PR<Enter> command must be issued from the terminal emulator while set at each of the AR2700's possible baud rates until the AR2700 accepts the command and sets the baud rate to 9600. The possible baud rates are 9600, 19200, **115200**, 230400, 460800, 921600, 1843200, 2000000.

2.5.2 Sensor Output Check

If the sensor output value is in error, check that the sensor and target are stationary and stable, that the target is at least 8 inches (0.2 m) from the sensor's lens, and that the laser beam is hitting the target. To see the infrared laser spot, view the spot through a digital camera viewfinder.

The distance offset setting may alter the values output by the sensor. Reset the sensor to the factory default to remove its effect.

The sensor may need to warm up for 5-10 minutes before reaching full accuracy. Leave it on for a few minutes and re-check the sensor accuracy.

3. Signal and Power Interface

3.1 Sensor Unit

3.1.1 Sensor Cable, Wire Colors and Functions

The AR2700 sensor has a (optional) multipurpose cable (sensor cable) with solder tail wires. Connection and termination according to the instructions is essential for correct sensor operation. Read the wire descriptions for connection information.

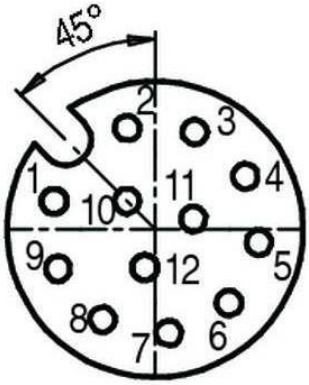

Figure 3 AR2700 multipurpose cable with 12 conductors (Binder 713)

The tables below shows the wiring on systems ordered without power supplies.

Wire	Pin	Function in All Modes
Brown	1	Alarm 1 output Q1
Blue	2	Ground – Supply Voltage
White	3	RS232/422 Setting Pin
Green	4	RS232 TX or RS422 TX+
Pink	5	RS422 RX-
Yellow	6	RS422 TX-
Black	7	Alarm 2 output Q2
Gray	8	RS232 RX or RS422 RX+
Red	9	Supply Voltage (10 – 30 VDC), 3W max
Violet	10	Trigger signal IN/OUT
Grey / Pink	11	Analog output 4-20mA signal
Red / Blue	12	Ground – measurement signal (Analog)

3.1.2 Power Supply (Red, Blue)

The Blue wire is the Power Supply Common return, also named Ground. It carries the return current for the power supply.

The Red wire is the Power Supply Input to the sensor. The sensor requires +10 VDC power at 125 mA. The Analog Output uses an additional current up to 25 mA.

Power supplies from 10 VDC to 30 VDC may be used. Higher voltages will result in excessive current drawn by the over-voltage protection circuitry and may cause permanent damage. Voltages less than 10 VDC may result in inaccurate measurement readings or non-functionality. The AR2700 sensor has inverse polarity protection and over-voltage protection to a maximum of 42 V.

3.1.3 RS232 Serial Communications (Green, Gray)

RS232 and RS422 interfaces must not be connected and operated simultaneously.

See Serial Interface Operation (section 4) for information on commands and data.

RS232: RS232 is normally used for slower speeds and shorter distances of communications. A standard 9-pin D-SUB RS232 serial female connector can be built to interface with a PC compatible computer using connection the pins below.

Color	DS9 Pin	Function
Green	2	Transmit data from sensor
Gray	3	Receive data to sensor
Red / Blue	5	Signal ground reference
N /C	1, 4, 6	DCD, DTE, DCE – These three signals can be tied together to satisfy some PC signal requirements for hardware handshake.
N / C	7, 8	CTS, RTS – These two signals can be tied together to satisfy some PC signal requirements for hardware handshake.

3.1.4 RS422 Serial Communications (Green, Pink, Yellow, Grey)

RS422: RS422 is normally used for faster speeds and longer distances of communications. Two wires, usually twisted together, carry each differential (noise-immune) signal. There are no standard PC connections. A special adapter is required to connect to a PC using RS422.

Wire	Pin	Function in All Modes
Green	4	RS422 TX+
Pink	5	RS422 RX-
Yellow	6	RS422 TX-
Grey	8	RS422 RX+
Red / Blue	12	Ground – measurement signal

3.1.5 Analog Output (Grey/Pink, Red/Blue)

The Red/Blue wire is the return signal for the Analog Output. It is connected to ground inside the sensor and should not be connected to ground outside the sensor. Inadvertently connecting it to ground may cause a reduction in accuracy of the analog output. The analog signal for distance is a 4-20 mA current loop. Sensor error signaling can be configured to output either 3 mA or 21 mA.

In Current Loop mode the Grey / Pink wire delivers a current proportional to the measured distance. The resolution is characterized by a 16-bit digital-to-analog converter.

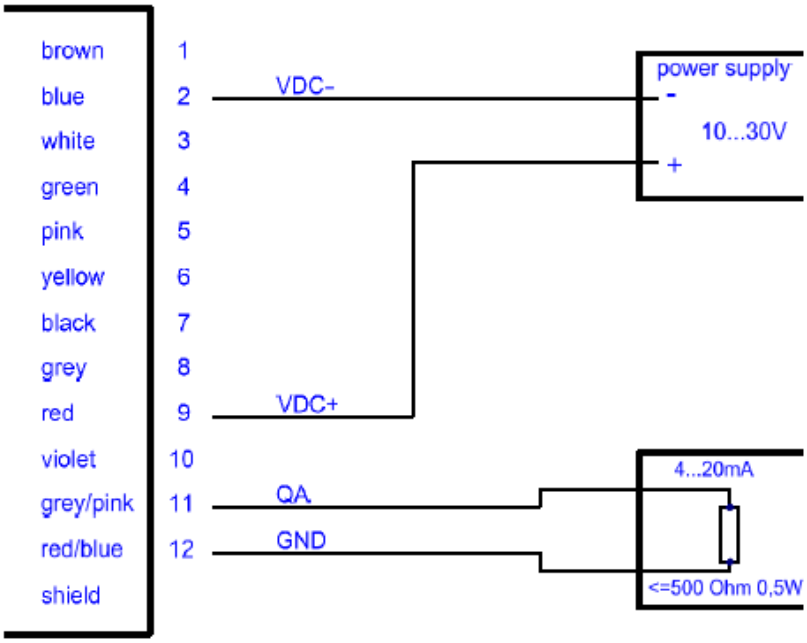

Figure 4 Wiring Diagram for Analog output

The best conversion to voltage is obtained by connecting a 100 ohm load resistor (<500 ohms, 0.5 Watt minimum) between the Grey/Pink and Red/Blue wires at the measurement point.

3.1.6 Alarm Outputs Q1 and Q2 (Brown, Black)

The Brown wire is the Alarm Output 1 (Q1). The Black wire is Alarm Output 2 (Q2).

See Alarm Output Operation (section 6) for operation options and details.

The Alarm Output is an open collector PNP transistor switch to the Ground for Power (Blue). When the Alarm Output is not active, its output will be high impedance and no current will flow through it. When the Alarm Output is active (On) it can source up to 500mA of current.

The voltage on the Alarm wire must not exceed the limits of the Power Supply connection voltages (Red and Blue wires), or excessive current may flow into the sensor and cause damage. A load resistor of > 150 Ohms/6 W (max. operating voltage of 30 V; max. load current of 0.2 A) must be switched against Ground (Blue) at the switching output. A *typical* resistance is 1 kOhm against ground.

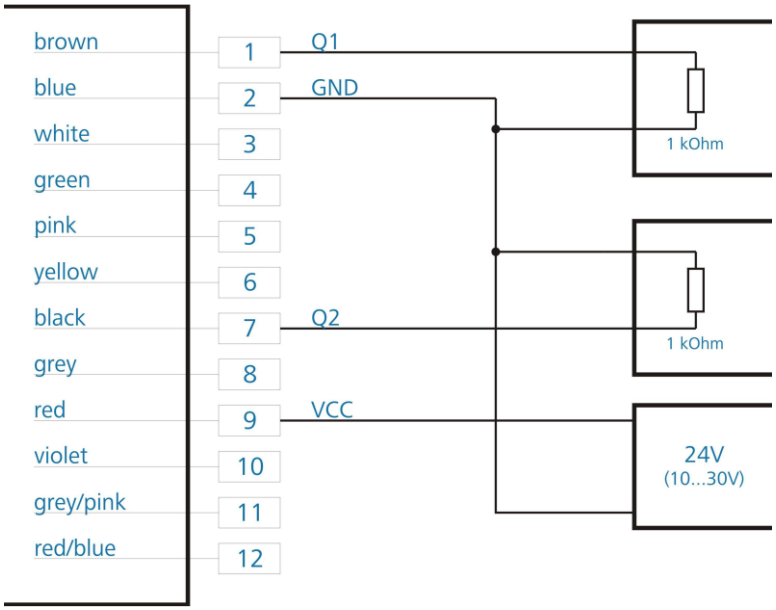

Figure 5 Wiring diagram for Alarm Output

3.1.7 Trigger Input and Output (Violet)

The Violet wire can be used as a trigger signal input OR output. The trigger function can be set with the parameters TI (Trigger Input - See Section 8.7) and TO (Trigger Output – See Section 8.8)

Voltage levels for the trigger signals

LOW	0-1.5V
HIGH	3-30V
Threshold	2.25V
Hysteresis	0.1V

Note: The violet wire can only be used as **EITHER** a trigger signal input **OR** output at any one time. This is determined by the value of the y parameter of the TI command (See section 8.7)

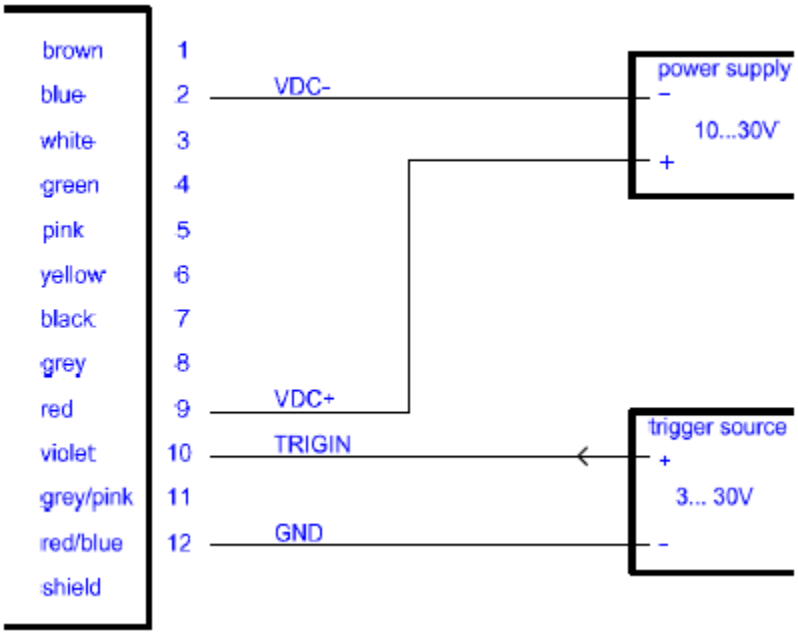

Figure 6 – Wiring Diagram for Trigger Input

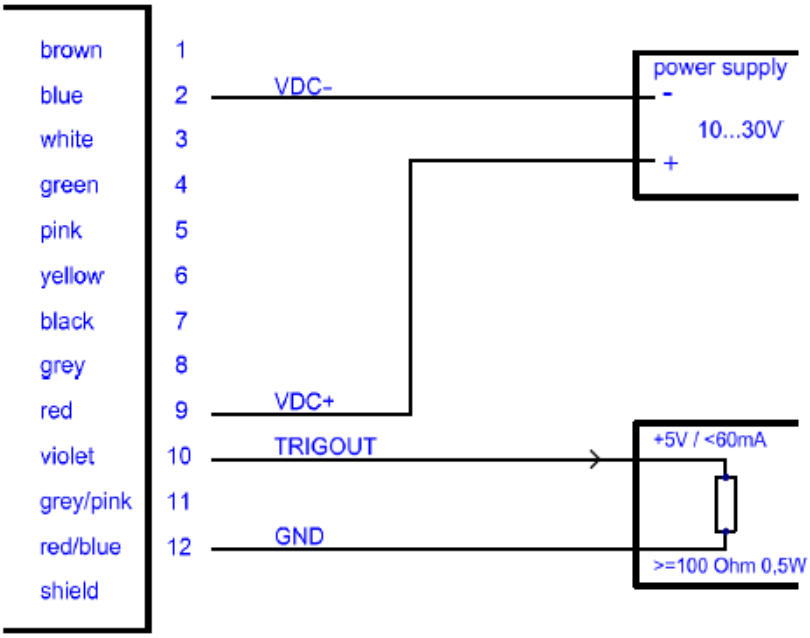

Figure 7 – Wiring Diagram for Trigger Output

4. Serial Interface Operation

4.1 Serial Hardware Interface

This section refers to serial communication protocols for both the Sensor and Module versions of the AR2700.

4.1.1 Communications Protocol

Serial port communication is required to configure the AR2700 for operation. The easiest way to communicate is by using a PC with an RS232 communication port and a terminal emulation program (Windows Hyperterminal or Teraterm™). The communications protocol is in ASCII format.

Before an operating session begins, users should configure the AR2700 sensor with parameters that meet the particular measuring site conditions and requirements. When configuring the AutoStart parameter, all valid settings will be preserved when the AR2700 sensor is turned off and restored when turned back on. They can only be replaced with new value entries or changed back to their default values by communication through the serial port. Below is a short view of the commands accepted through the AR2700 serial protocol:

	Description
ID	Displays Identification Information
ID?	Help Menu
DM	Single Distance Measurement
DT	Starts Continuous Distance Tracking
TP	Queries internal temperature in °C
HW	Reports Hardware Status
PA	Reports Configuration Parameters
PR	Resets the Parameters to Factory Default
DR	Reboots the Device
AS	Queries / sets Autostart
MF	Queries / sets Measurement Frequency
SA	Queries / sets Averaging Value
MW	Queries / sets the Measurement Window
GN	Queries / sets Receiver Gain
OF	Queries / sets the Distance Offset
SO	Sets the current distance to the Offset Distance Value
SE	Queries / sets Error Mode
Q1	Queries / sets digital alarm output 1
Q2	Queries / sets digital alarm output 2
QA	Queries / sets beginning and end of Analog interface (4mA, 20 mA)
BR	Queries / sets baud rate
SD	Queries / sets the Output Format
UB	Queries / sets unit for the binary output (in mm)
TE	Queries / sets the Terminator for RS422
ST	Queries / sets First or Last Target for Output
TC	Queries / sets DT Recalibration Timing
TI	Queries / sets Input Trigger
TO	Queries / sets Output Trigger

Set the AutoStart parameter to disable the continuous transmission of parameters during start-up.

4.1.1.1 Syntax of Command Set

The parameters are stored in a flash EEPROM. The individual parameters will be saved after a legitimate command is sent or until the parameter is changed by another input of command. Do not send continuous repeat transmissions of the same input commands (ie: at every power cycle).

Retrieval of parameters

Input of the PARAMETER <ENTER> (0x0D)

Setting of parameters

Input of PARAMETER VARIABLE <ENTER> (0x0D)

The variables are described in the sections below for each parameter.

Several variables are separated by a space (0x20).

If commands are inserted including parameters, the response includes the command and the parameters.

If commands are inserted without parameters, the response includes the command with the current parameters.

If commands are inserted including parameters beyond the valid value range, the response includes the command with the current parameters.

Unknown commands or incorrect parameter formats are acknowledged with a “?” (0x3F).

Starting a measurement (operating modes: DM, DT)

Input of COMMAND <ENTER> (0x0D)

Stopping a measurement

<ESC> (0x1B)

After <ESC> the response sent is: “? ESC CRLF” (0x3F1B0D0A)

Note: <ENTER> (0x0D) is the only acceptable way to terminate a command that is sent to the AR2700. No other characters/bytes should be sent (ie: LF (0x0A)

4.1.2 Identification (ID)

The ID command shows manufacturing details: Type of device, firmware version, firmware date, firmware time, device number, manufacturing date and manufacturing time.

4.1.3 Online Help (ID?)

The ID? command shows the list of available parameters and commands available in the AR2700.

4.1.4 Configuration Parameters Display (PA)

This command will output a list of current parameter settings.

```
PA <ENTER>
measure frequency[MF]..........     500(max 40000)Hz
average value[SA]..................  2
measure window[MW]............       -290.000 290.000 0
trigger in[TI]........................ internal trigger
trigger out[TO]......................  rising edge
distance offset[OF]................   0.000
error mode[SE]......................  1
digital out[Q1]......................  0.000 1.000 0.050 1
digital out[Q2]......................  0.000 1.000 0.050 1
analog out[QA]......................   0.000 1.000
receiver gain[GN]...................   0
serial baud rate[BR]................   115200
serial output format[SD]..........     dec (0), value+amplitude (1)
unit for binary output[UB]........     1000.000
serial output terminator[TE].....      0Dh0Ah (0)
autostart command[AS]..........        DT
select target[ST]...................   0/first
recalibration timing[TC]...........    1 sec/enabled
```

4.1.5 Baud Rate (BRx)

The Baud Rate is selectable via the serial interface and it requires the host device to change its own Baud Rate after commanding the sensor to change.

The following Baud Rates are provided (with corresponding serial command):

9600	BR9600<Enter>	
19200	BR19200<Enter>	
115200	**BR115200<Enter>**	**(default)**
230400	BR230400<Enter>	
460800	BR460800<Enter>	
921600	BR921600<Enter>	
1843200	BR1843200<Enter>	
2000000	BR2000000<Enter>	

NOTE: Some computer hardware and serial boards cannot support very high baud rates (>= 460800) despite the ability to select them through terminal emulator pull-down lists! Once set, there is no way to change the baud rate until you can successfully interface with the sensor. The AR2700 has no method of “reset” other than through the serial interface. Most USB-serial converters will support very high baud rates, however some do not. Converters using FTDI chips are suggested.

If operating at the maximum baud rate and maximum sampling rate (40 kHz) consider using AR2700 sensors with RS422 interfaces.

4.1.6 Serial Data Format (SDx y)

The Serial Data output may be formatted to be decimal or binary. For each format, the data stream can be configured to include distance, signal quality, and temperature.
In conjunction with the baud rate, the Serial Data Format determines the maximum output speed of measured values. If a higher measurement frequency is set then can be maintained by the baud rate / serial data format combination, the results of some measurements may not be put out.

SDx y<ENTER> where:

x	Output format		y	Output values
0	Decimal		0	Distance
1	Hexadecimal		1	Distance + Signal Quality
2	Binary		2	Distance + Temperature
			3	Distance + Signal Quality + Temperature

Temperature refers to the internal temperature near the sensor electronics. Signal quality is a measure of the amount of reflected light on the detector. Reflective targets (white paper, retroreflective targets) will give a high Signal Quality. Black surfaces or shiny, non-perpendicular surfaces will have low Signal Quality values.

4.1.6.1 Binary Format

Distance:

2 bytes, MSB = bit 7
MSB of byte 1 is always 1.
MSB of byte 0 is always 0.
Data in each byte = bit 6 … bit 0

Coding: Two's complement

Conversion of binary value into decimal value: *1/100

Distance	1	0	0	0	0	0	1	0	0	1	0	1	0	0	1	0	: 100 = 3.38 m

Signal:

1 byte
MSB = bit 7
MSB of byte 0 is always 0.
Data = bit 6 … bit 0

Signal	0	0	0	0	1	0	1	1	* 2 = 22

Temperature:

1 byte
MSB = bit 7
MSB of byte 1 and 0 is always 0.
Data in each byte = bit 6 … bit 0
Conversion of binary value into decimal value: -40

Temperature	0	1	0	1	1	1	0	1	- 40 = 53°C

	Distance (2 bytes)												**Signal (1 byte)**								**Temperature (1 byte)**											
	Byte 1								**Byte 0**				**Byte 0**								**Byte 0**											
Bit	7	6	5	4	3	2	1	0	7	6	5	4	3	2	1	0	7	6	5	4	3	2	1	0	7	6	5	4	3	2	1	0
Data	1	x	x	x	x	x	x	x	0	x	x	x	x	x	x	x	0	x	x	x	x	x	x	x	0	x	x	x	x	x	x	x

4.1.7 Terminator (TEx)

This command sets the ASCII terminator of measured values. The default value is “0” for carriage return / line feed. The possible terminator options are as follows:

x value	ASCII	Definition
0	0x0D 0x0A	Carriage Return Line Feed
1	0x0D	Carriage Return
2	0x0A	Line Feed
3	0x02	Start of Text
4	0x03	End of Text
5	0x09	Horizontal Tab
6	0x20	Space
7	0x2C	Single Quote
8	0x2C	Colon
9	0x3B	Semicolon

4.1.8 Temperature Query (TP)

The response to the TP <ENTER> command is the internal temperature of the sensor in degrees Celsius, to the nearest tenth of a degree. This temperature is not the ambient operating temperature, but the device’s internal temperature. The internal temperature may be as much as 25°C higher than the ambient temperature.

4.1.9 Parameter Reset (PR)

This command resets all parameter to factory default values EXCEPT the baud rate. See the Serial Command Quick Reference in section 0 for a chart of factory default values.

4.1.10 Device Reboot (DR)

This command reboots the AR2700 device, similar to a “cold start” or voltage interruption. The unit will default to the AutoStart configuration. Use this command to test the AutoStart configuration without powering down the sensor.

4.1.11 Auto Start (ASx)

The Auto Start command allows you to program the sequence of settings the sensor will use upon start-up. The factory default setting is AS DT and this can be verified by typing AS <ENTER> or PA <ENTER>.

The following parameters can be configured for Auto Start: ID, ID?, DM, DT, HW, PA, PR, MF, SA, MW, OF, SE, Q1, Q2, QA, BR, SD, TE and TP.

For Example:

AS BR9600 MF1000 SA100 DT <ENTER> will put the AR2700 at 9600 baud, an OUTPUT frequency of 10 Hz and Distance Tracking set to “ON”.

4.2 Error Mode (SEx)

If no measured value can be determined, a message “E02” will be output over the serial interface.

The Error Mode command allows users to configure the behavior of the alarm outputs Q1 and Q2 and of analogue output QA in case of faulty measurements

The factory default value is SE1. See the chart below for this meaning

x	Q1,Q2 (z=0)	Q1, Q2 (z=1)	Analog
0	Last Value	Last Value	Last Value
1	High	Low	3mA
2	Low	High	21mA

5. Analog Output Operation

The analog output uses two wires. The output is Grey / Pink and the return is Red / Blue. The current loop 4-20 mA output is always on.

The analog output is updated with each sample measured. The analog output will deliver a current which increases linearly from 4 mA at the range beginning point to 20 mA at the range end point. The AR2700 sensor’s digital to analog converter is 16-bit.

A 3mA or 21mA signal indicates an error condition. The selection of Error Mode is done using the Error Setting mode in section 4.2.

When converting the signal, best accuracy and noise immunity is obtained by connecting a <500 Ohm resistor to the current return wire at the measurement point. For connection details, see section 3.1.5.

5.1 Setting the range beginning and end points (QAx y)

The default setting for QA is x=0.000 and y=1.000 meters where **x** is the range beginning of 4mA and **y** is the range end of 20mA.

x>y, x<y, but x≠y The current value can be calculated according to the following formula:

x < y	• $QA[mA] = 4mA + 16\frac{Dist - x}{y - x}mA$
x > y	• $QA[mA] = 20mA - 16\frac{Dist - y}{x - y}mA$

The resolution of x and y is 0.001 meters (float32).

The Measurement Window (Section 7.4) applies to the current loop output.

6. Alarm Output(s) Operation (Q1, Q2)

The alarm outputs use Brown and Blue for Q1 and Black and Blue for Q2. See section 3.1.6 for the connection diagram.

Alarm output is also referred to as *digital switching output*. Users of the AR2700 laser sensor may wish to monitor the position of an object and receive an alarm if it moves beyond set distance limits. To do this, users establish parameters of a measurement threshold, range, hysteresis and state. The alarm signals whether the preset hysteresis switching range is exceeded or fallen short of.

A load resistor > 150 Ohms / 6 W (max. operating voltage of 30 V; max. load current of 0.2 A) must be switched against Ground (Blue wire) at the switching output. Do not exceed a load current of 0.2 A

The alarm output is updated with each sample measured.

6.1 Setting the alarms (Q1w x y z or Q2w x y z)

w = measuring range when the output switches

x = length of range when the output state is held

y = hysteresis

z = logic behavior (low or high)

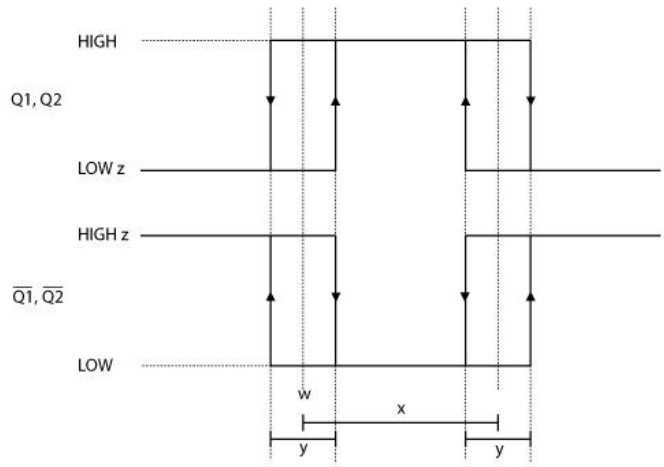

Variable	Description	Specification	Factory Default Value
w	Threshold	-9999.999 to 9999.999	0.000
x	Range	x > 0; x > y	1.000
y	Hysteresis	y ≥ 0	0.050
z	State	0 = LOW; 1 = HIGH	1

7. Performance Optimization

7.1 Measurement Modes

The AR2700 automatically begins measuring and outputting distance measurements to the analog and serial lines when powered-up.

Users may select among several modes that will optimize the sensors' speed or accuracy performances for their specific measuring application.

7.1.1 Distance Tracking Mode (DT)

In the Distance Tracking Mode, measurements are continuously streamed to the serial and analog interfaces according to the preset Measurement Frequency (MF) and Averaging Value (SA). The format of the output is dictated by the SD command (see Section 0).

The only way to disrupt / stop sampling with Distance Tracking mode is by pressing the Escape button (0x1B).

7.1.2 Single Distance Measurement (DM)

The DM command is a software trigger for the AR2700 sensor to perform a single distance measurement and output the results to the serial and analog interfaces. The duration of the measurement depends on the preset Measurement Frequency (MF) and the Averaging Value (SA).

7.2 Measurement Frequency (MFx)

Factory default setting is 10000. You can query the current measurement frequency setting by typing MF <ENTER>.

The parameter of the MF command determines the number of pulses transmitted by the AR2700 sensor. The time of measurement and, thus, the transmission of the measurement result via the serial interface are additionally determined by Averaging Value (SA).

7.3 Averaging Value (SAx)

Factory default setting is 1000. 1 ≤ x ≤ 30000. x must be a whole number.

The SA command dictates the number **x** of measured values to be averaged for one measurement transmitted to the serial or analog interfaces. The Averaging Value directly correlates with the measurement frequency MF. SA and MF determine the output frequency of the measured values.

The Averaging Value parameter is useful for reducing measurement noise at high sampling frequencies. The typical noise (reproducibility) at 16 KHz is 50 mm with no averaging. However, this can be reduced by a factor of the square root of SA.

For example:

Measurement Frequency (MF)	Averaging Value (SA)	Output Frequency in Hz	Noise dispersion in mm
16000	1	16000	50
16000	10	1600	16
16000	100	160	5
16000	1000	16	2

7.4 Measurement Window (MWx y z)

The Measurement Window defines the ranges of acceptable measurements. Measurements outside the window are not transmitted. The factory default values for the start **x** is -71.000 and the end **y** is 71.000. You can query the preset values by typing MW<ENTER>. The resolution of values x and y is 0.001.

Parameter z sets the output value before and after the range of the measurement window. Z can be set to either 0 or 1.

The Measurement Window is an effective tool for defining a measurement range or screening measurements from interfering objects that are outside the window.

7.5 Distance Offset (OFx)

Factory default setting is 0.000.

The Distance Offset allows the user to artificially add a value to the measured value. The Distance offset can be any number, positive or negative, with a resolution of 0.001 meters.

For example:

OF-10.100 <ENTER> will subtract 10.100 meters from the currently measured distance and output that result to the serial interface.

7.5.1 Set current measurement to Distance Offset (SO)

The SO command performs a distance measurement and saves the measured reading as an offset value with inverted mathematical sign (OF). This command can be used as a “tare” function for setting a zero point.

7.6 Select Target (STx)

The AR2700 is able to detect up to 4 targets. You can use the ST command to tell the AR2700 to follow the target closest to the sensor or the target furthest away.

ST0 – Follow First (closest) Target (Default)

ST1 – Follow Last (furthest) Target

7.7 Trigger Input (TIx y)

The TI command sets the AR2700 to accept a trigger input and how the sensor reacts to such an input. The sensor can be set to either trigger a single measurement or start/stop the Autostart function (set with the AS command – see section 5.1.11). The maximum frequency of input signals the sensor can handle is 30 kHz.

x value Determines what the sensor does at the edges of the input signal.

0	Sensor triggers on rising edge (LOW to HIGH)	(Default)
1	Sensor triggers on falling edge (HIGH to LOW)	
2	Sensor triggers on alternating edges (LOW to HIGH/HIGH to LOW)	
3	Starts or stops Autostart function on rising edge	
4	Starts or stops Autostart function on falling edge	

y value Enables the trigger input and determines the time delay from trigger to action in milliseconds

0	Trigger input disabled.	(Default)
1-60,000	Time delay of trigger input in milliseconds.	

Note: When y = 0, the Trigger Output function of the violet wire is enabled.
When y > 0, the Trigger Output function of the violet wire is disabled.
See Section 8.8 for Trigger Output options.

7.8 Trigger Output (TOx)

The TO command determines the form of the trigger output signal transmitted over the violet wire. This signal is enabled when the y parameter of the TI command equals 0 (See section 8.7) When enabled the AR2700 will send trigger signals upon every measurement up to a maximum frequency of 40 kHz.

The parameter x determines the form of the signal

0	Trigger signal will be LOW to HIGH voltage	(Default)
1	Trigger signal will be HIGH to LOW voltage	
2	Trigger signal will alternate (LOW to HIGH/HIGH to LOW)	

Note: The violet wire can only be used as **EITHER** a trigger signal input **OR** output at any one time. This is determined by the value of the y parameter of the TI command (See section 8.7).

7.9 Gain (GNx)

The GN command allows the user to adjust the amplification of the detected signal by choosing one of 5 presets.

-1	Automatic gain	
0	Default gain	(Default)
1,2,3	Presets of increasing gain	

7.10 Time Calibration (TCx)

The AR2700 has internal logic that allows the sensor to correct for measurement drifts due to certain internal and external causes such as a change in temperature. The TC command determines how frequently the sensor attempts to self-correct. Acuity recommends keeping this set at the default (1 second) in nearly all circumstances.

0	No time calibration
1-3660	Calibration in seconds

Default is 1 second.

Note: Up to a measuring frequency of approx. 35 kHz the calibration will be done without any influences of the output frequency. Between 35 kHz and 40 kHz it could be possible that the data output will be interrupted one (1) distance output every x seconds (x= parameter of TC).

8. Serial Command Quick Reference

Type <Enter> after each command.

AR2700 Configuration Data Settings (Serial)			Factory Default
Command Name	Serial Command	Serial Code / Function	
Identification	ID	Displays sensor identification information	
Online help menu	ID?	Displays serial command menu	
Distance Tracking	DT	Continuous measurements	DT
Single Distance Measurement	DM	Serial trigger for a single distance measurement	
Temperature Query	TP	Queries internal sensor temperature in °C	
Hardware Status	HW	Reports hardware info for error handling	
Parameter Display	PA	Lists all parameters with current settings	
Factory Reset	PR	Resets all parameters to factory default values EXCEPT baud rate	
Device Reset	DR	Simulates a power restart of sensor	SA1
Autostart configuration	ASx	Configures which modes and parameters will become active after power up	ASDT
Measurement Frequency	MFx	Adjusts the sampling frequency from 1 to 16000	MF10000
Averaging Value	SAx	Sets the number of samples to be averaged before transmitting measurement	SA1000
Measurement Window	MWx y z	Sets a specified measurement window	MW-71.000 71.000 0
Distance Offset	OFx	Adds the offset value to the measurement	OF0.000
Current Distance Offset	SO	Sets the current measurement to the offset value OF	
Error Mode	SEx	Sets the error mode behavior for Analog and Alarm interfaces	SE1
Alarm Output 1	Q1w x y z	Sets the threshold, range, hysteresis and state for alarm	Q10.000 1.000 0.050 1
Alarm Output 2	Q2w x y z	Sets the threshold, range, hysteresis and state for alarm	Q20.000 1.000 0.050 1
Analog Settings	QAx y	Sets the beginning and end points for the 4-20mA interface	QA0.000 1.000
Baud rate	BRx	9600 BR9600<Enter> 19200 BR19200<Enter> 115200 BR115200<Enter> 230400 BR230400<Enter> 460800 BR460800<Enter> 921600B R921600<Enter> 1843200 BR1843200<Enter> 2000000 BR2000000<Enter>	BR115200
Serial Data Format	SDx y	Configures the serial data format from ASCII decimal, hexadecimal or binary and also if range, temperature and measurement strength are transmitted	SD0 0
Terminator character	TEx	Selects the ASCII line terminator (CR LF, CR, etc.)	TE0 (CR LF)
Select Target	STx	Selects the target the sensor follows.	ST0
Trigger Input	TIx y	Enables and sets the reaction of the sensor to a trigger signal.	TI0 0
Trigger Output	TOx y	Enables and characterizes the output trigger signal.	TO0 0
Gain	GNx	Allows for the adjustment of signal amplification	GN0
Time Calibration	TCx	Self corrects for measurement drifts every x seconds.	TC1