Solar inverters

ABB central inverters PVS800 100 to 500 kW

ABB central inverters raise reliability, efficiency and ease on installation to new levels. The inverters are aimed at system integrators and end users who require high performance solar inverters for large photovoltaic power plants and industrial and commercial buildings. The inverters are available from 100 kW up to 500 kW, and are optimized for cost-efficient multi-megawatt power plants.

World's leading inverter platform

The ABB solar inverters have been developed on the basis of decades of experience in the industry and proven technology platform. Unrivalled expertise from the world's market and technology leader in variable speed AC and DC drives is the hallmark of the new solar inverter series.

Based on ABB's highly successful platform of industrial drives - the most widely used industrial drives on the market – the inverters are the most efficient and cost-effective way to convert the direct current generated by solar modules into high-quality and CO_2-free alternating current that can be fed into the power network.

Solar inverters from ABB

ABB central inverters are ideal for large photovoltaic power plants and medium sized power plants installed in commercial or industrial buildings. High efficiency, proven components, compact and modular design and a host of life cycle services ensures ABB central inverters provide a rapid return on investment.

Highlights

- High efficiency and long operating life
- Modular and compact product design
- Extensive DC and AC side protection
- Power factor compensation as standard
- Fast and easy installation
- Complete range of industrial-type data communication options, including remote monitoring
- Life cycle service and support through ABB's extensive global service network

Power and productivity
for a better world™

ABB central inverters

Maximum energy and feed-in revenues

ABB central inverters have a high efficiency level. Optimized and accurate system control and a maximum power point tracking (MPPT) algorithm ensure that maximum energy is delivered to the power network from the solar modules. For end users this generates the highest possible revenues from the feed-in tariffs now common in many countries.

Proven ABB components

The inverters comprise proven ABB components with a long track record of performance excellence in demanding applications and harsh environments. Equipped with extensive electrical and mechanical protection, the inverters are engineered to provide a long and reliable service life of at least 20 years.

Compact and modular design

The inverters are designed for fast and easy installation. The industrial design and modular platform provides a wide range of options like remote monitoring, fieldbus connection and integrated DC cabinets. The inverters are customized and configured to meet end user needs and are available with short delivery times.

Effective connectivity

ABB's transformerless central inverter series enables system integrators to design the solar power plant using a combination of different power rating inverters, which are connected to the medium voltage grid centrally.

In certain conditions, the ABB central inverter's topology allows a parallel connection directly to the AC side, enabling electricity to be fed to the grid via a single transformer. This avoids the need for each central inverter to have its own transformer, thereby saving cost and space. However, in systems where the DC side needs to be grounded, an inverter dedicated winding within a transformer, or a separate transformer, must be used always.

Technical data and types

Type designation	PVS800-57-0100kW-A	PVS800-57-0250kW-A	PVS800-57-0500kW-A
	100 kW	250 kW	500 kW
Input (DC)			
Recommended max input power (P_{PV}) [1]	120 kW_p	300 kW_p	600 kW_p
DC voltage range, mpp (U_{DC})	450 to 750 V (- 825 V*)	450 to 750 V (- 825 V*)	450 to 750 V (- 825 V*)
Maximum DC voltage ($U_{max\ (DC)}$)	900 V (1000 V*)	900 V (1000 V*)	900 V (1000 V*)
Maximum DC current ($I_{max\ (DC)}$)	245 A	600 A	1145 A
Voltage ripple	< 3%	< 3%	< 3%
Number of protected DC inputs (parallel)	1 (+/-) / 4 [2]	2 (+/-) / 8 [2]	4 (+/-) / 16 [2]
Output (AC)			
Nominal AC output power ($P_{N\ (AC)}$)	100 kW	250 kW	500 kW
Nominal AC current ($I_{N\ (AC)}$)	195 A	485 A	965 A
Nominal output voltage ($U_{N\ (AC)}$) [3]	300 V	300 V	300 V
Output frequency [4]	50 / 60 Hz	50 / 60 Hz	50 / 60 Hz
Harmonic distortion, current [5]	< 3%	< 3%	< 3%
Power factor compensation (cosφ)	Yes	Yes	Yes
Distribution network type [6]	TN and IT	TN and IT	TN and IT
Efficiency			
Maximum [7]	98.0%	98.0%	98,6%
Euro-eta [7]	97.5%	97.6%	98,2%
Power consumption			
Own consumption in operation	< 350 W	< 300 W	< 600 W
Standby operation consumption	< appr. 55 W	< appr. 55 W	< appr. 55 W
External auxiliary voltage [8]	230 V, 50 Hz	230 V, 50 Hz	230 V, 50 Hz
Dimensions and weight			
Width / Height / Depth, mm (W / H / D)	1030 / 2130 / 644	1830 / 2130 / 644	3030 / 2130 / 644
Weight appr.	550 kg	1100 kg	1800 kg

1) Inverter limits the power to a safe level
2) Optional MCB inputs, 80 A each
3) Grid voltage (+/- 10%)
4) Grid frequency (48 to 63 Hz)
5) At nominal power
6) 300 V output must be IT type
7) Without auxiliary power consumption at 450 V U_{DC}
8) 115 V, 60 Hz optional

* Max 1000 V_{DC} input voltage as an option with mppt range 450 to 825 V. If DC is > 1000 V_{DC} inverter is not damaged, but will not start.

ABB central inverter design and grid connection

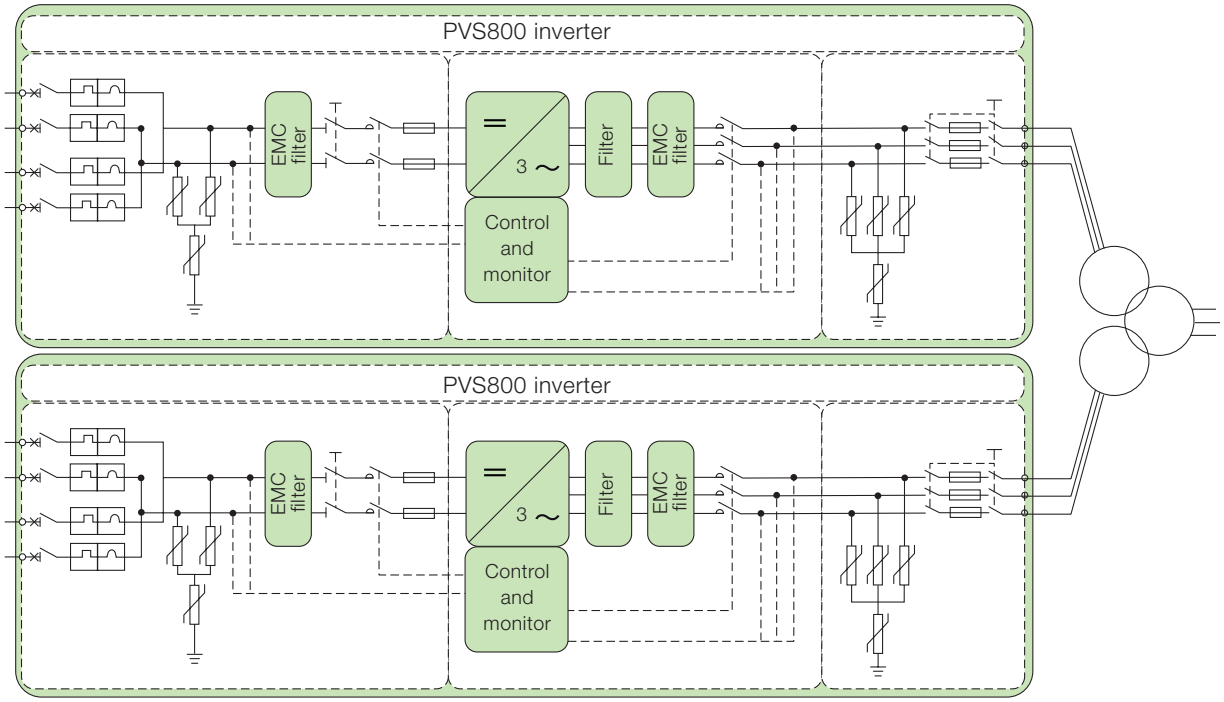

Type designation	PVS800-57-0100kW-A	PVS800-57-0250kW-A	PVS800-57-0500kW-A
	100 kW	250 kW	500 kW
Environmental limits			
Degree of protection	IP22 / IP42 [9]	IP22 / IP42 [9]	IP22 / IP42 [9]
Ambient temperature range (nominal ratings) [10]	-15 °C to +40 °C	-15 °C to +40 °C	-15 °C to +40 °C
Maximum ambient temperature [11]	+50 °C	+50 °C	+50 °C
Relative humidity, not condensing	15% to 95%	15% to 95%	15% to 95%
Maximum altitude (above sea level) [12]	2000 m	2000 m	2000 m
Maximum noise level	75 dBA	75 dBA [13]	75 dBA [13]
Cooling air flow	1300 m^3/h	1880 m^3/h	3760 m^3/h
Protection			
Ground fault monitoring [9]	Yes	Yes	Yes
Grid monitoring [9]	Yes	Yes	Yes
Anti-islanding [9]	Yes	Yes	Yes
DC reverse polarity	Yes	Yes	Yes
AC and DC short circuit and over current	Yes	Yes	Yes
AC and DC over voltage and temperature	Yes	Yes	Yes
User interface and communications			
Local user interface	ABB local control panel	ABB local control panel	ABB local control panel
Analog inputs / outputs	1/2	1/2	1/2
Digital inputs / relay outputs	3/1	3/1	3/1
Fieldbus connectivity	Modbus, PROFIBUS, Ethernet		
Product compliance			
Safety and EMC	CE conformity according to LV and EMC directives		
Certifications and approvals	VDE, CEI, UNE, RD, EDF, Golden Sun, BDEW		
Grid support	Reactive power compensation, Power reduction, Low voltage ride through [9]		

[9] Optional
[10] Frosting is not allowed. May need optional cabinet heating.
[11] Power derating after 40 °C
[12] Power derating above 1000 m. Above 2000 m special requirements.
[13] At partial power typically < 70 dBA

ABB central inverter data communication principle

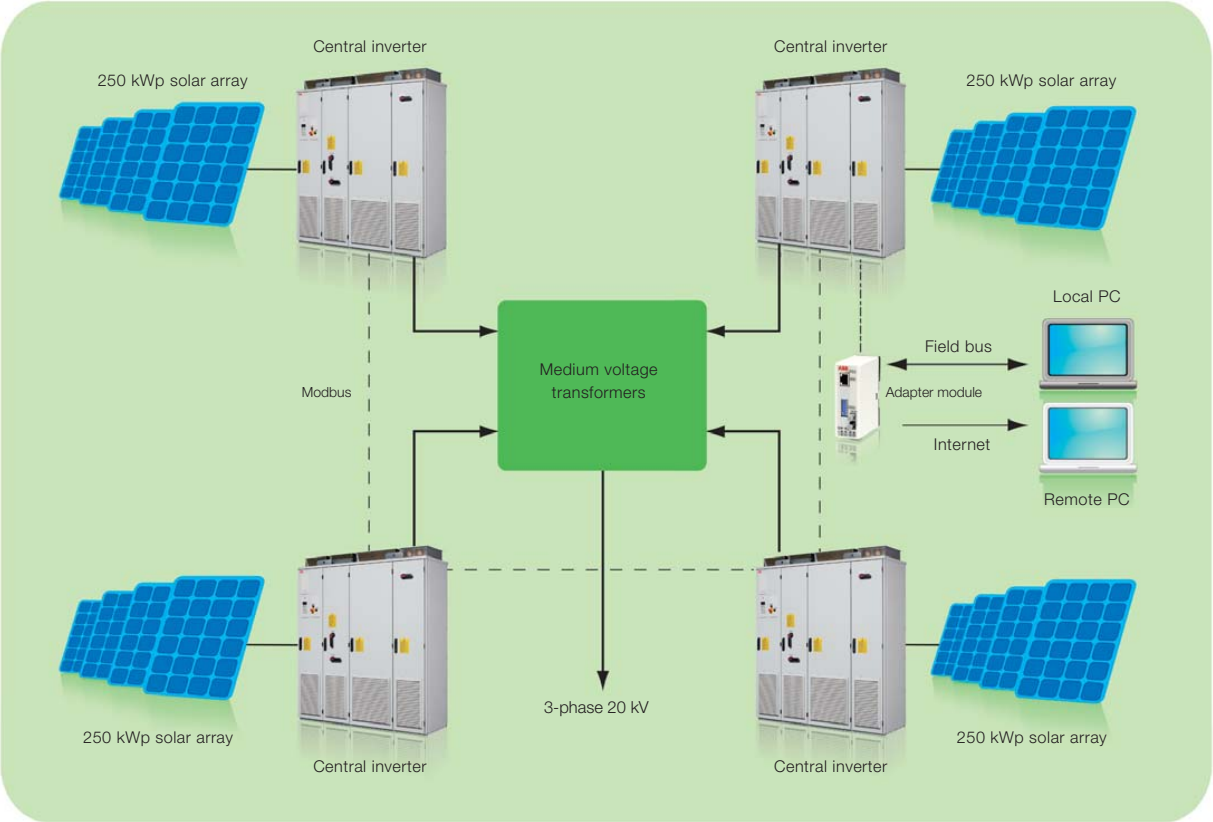

3AUA0000057380 REV G EN 11.10.2011 #15932

Accessories
- Solar array junction boxes with string monitoring
- Remote monitoring solutions
- Warranty extensions possible
- Solar inverter care contracts

Integrated DC input extension cabinets

Options
- Increased IP ratings for cabinets
- Integrated DC input extension cabinets
- AC output grounding switch
- Cabinet heating
- I/O extensions
- Extended voltage range, 1000 V_{DC} max.
- DC grounding (negative and positive)
- Fieldbus and Ethernet connections

Junction box with monitoring

Support and service
ABB supports its customers with a dedicated service network in more than 60 countries and provides a complete range of life cycle services from installation and commissioning to preventative maintenance, spare parts, repairs and recycling.

For more information please contact your local ABB representative or visit:

www.abb.com/solar
www.abb.com

© Copyright 2011 ABB. All rights reserved.
Specifications subject to change without notice.

Power and productivity
for a better world™