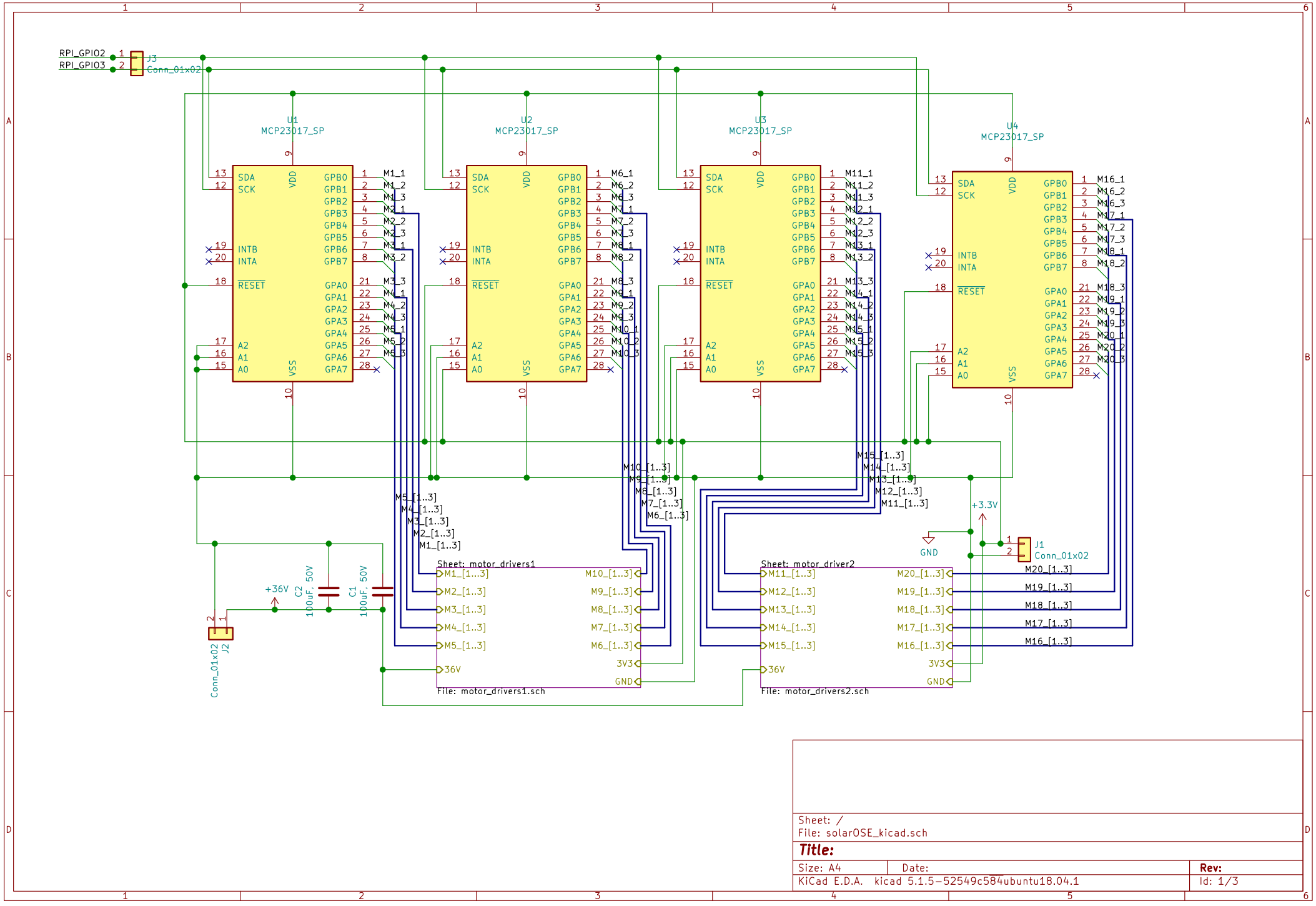

Sheet: /
File: solarOSE_kicad.sch

Title:

Size: A4	Date:	Rev:
KiCad E.D.A. kicad 5.1.5-52549c584ubuntu18.04.1		Id: 1/3

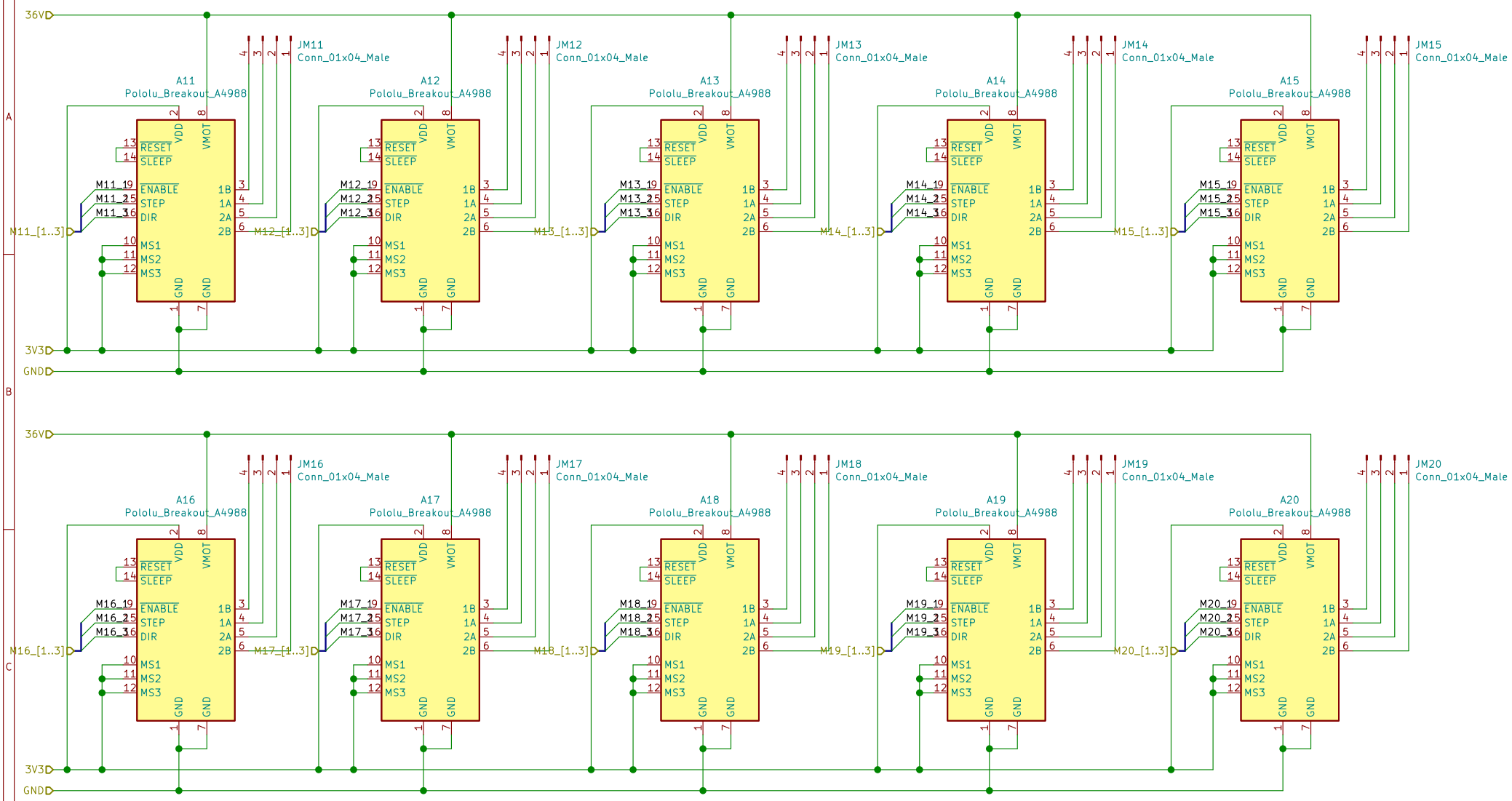

Sheet: /motor_driver2/
File: motor_drivers2.sch

Title:

Size: A4	Date:	Rev:
KiCad E.D.A. kicad 5.1.5-52549c584ubuntu18.04.1		Id: 2/3

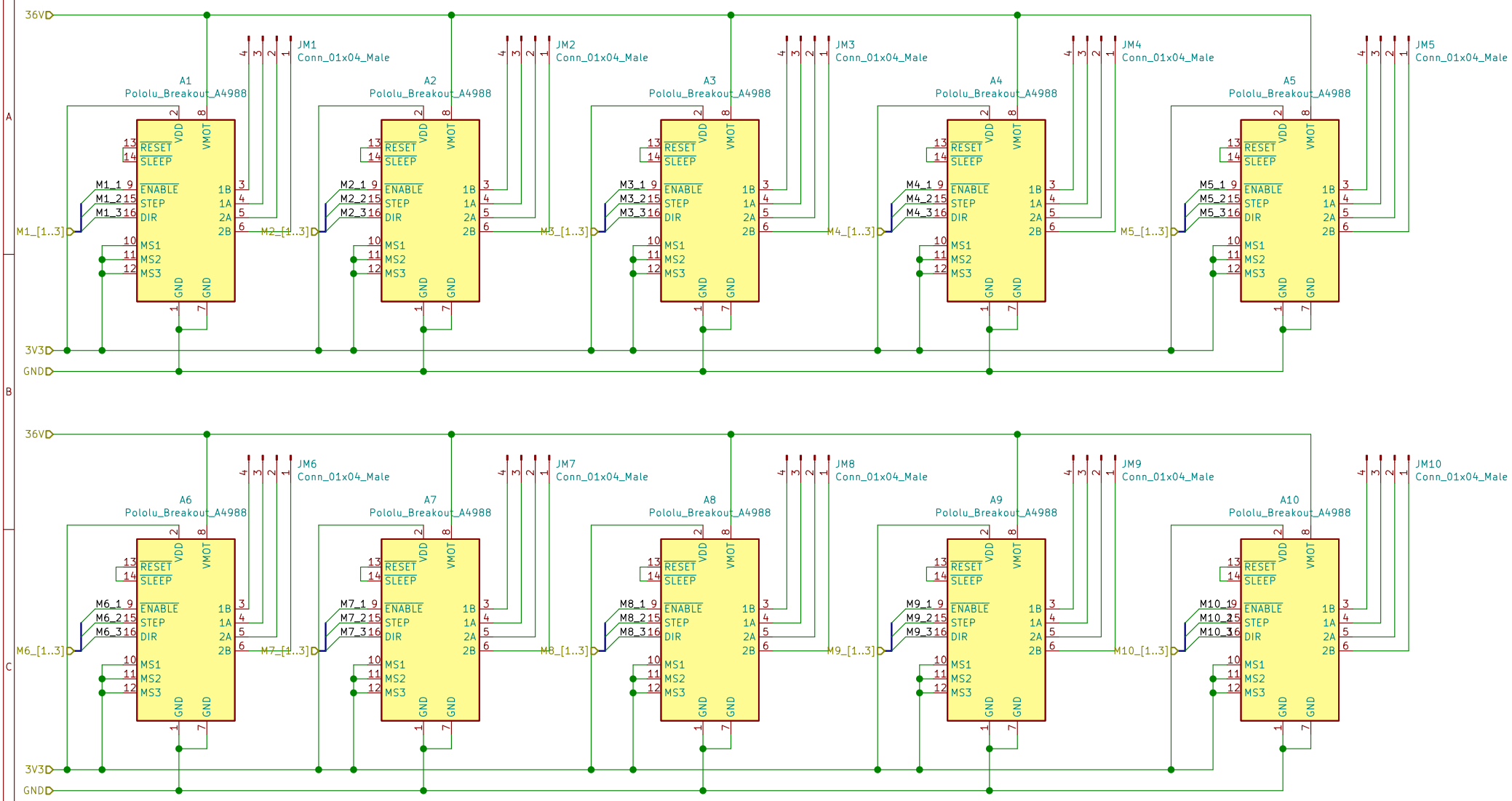

Sheet: /motor_drivers1/
File: motor_drivers1.sch

Title:

Size: A4	Date:	Rev:
KiCad E.D.A. kicad 5.1.5-52549c584ubuntu18.04.1		Id: 3/3