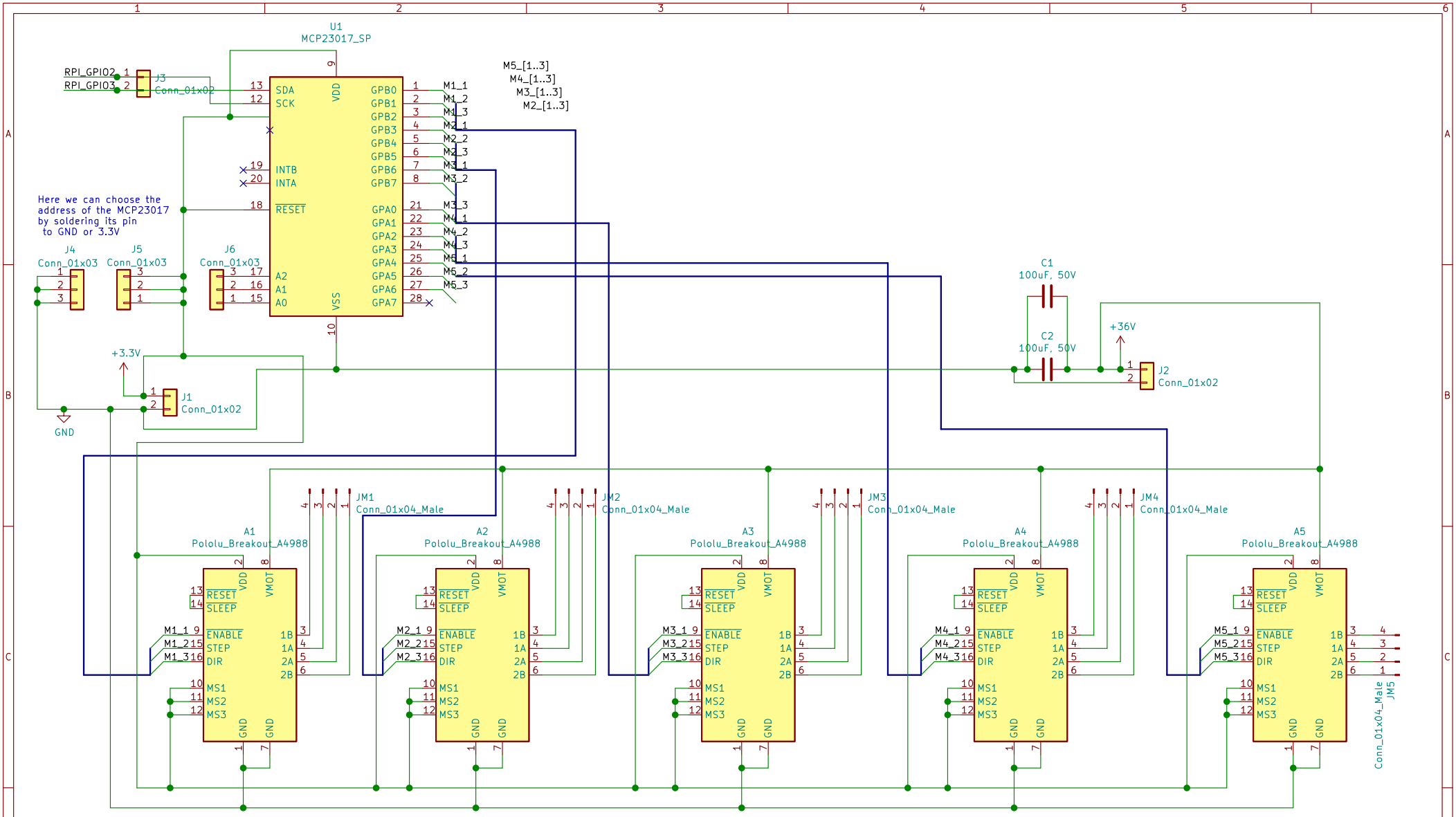

Sheet: /
File: solarOSE_kicad.sch

Title: SolarOSE v1.1

Size: A4	Date: 28/03/2020	**Rev:** v1.1
KiCad E.D.A. kicad 5.1.5-52549c585ubuntu18.04.1		Id: 1/1