STM32657I0H3Q Board
For running YOLO Inference on the SolarVision Mower

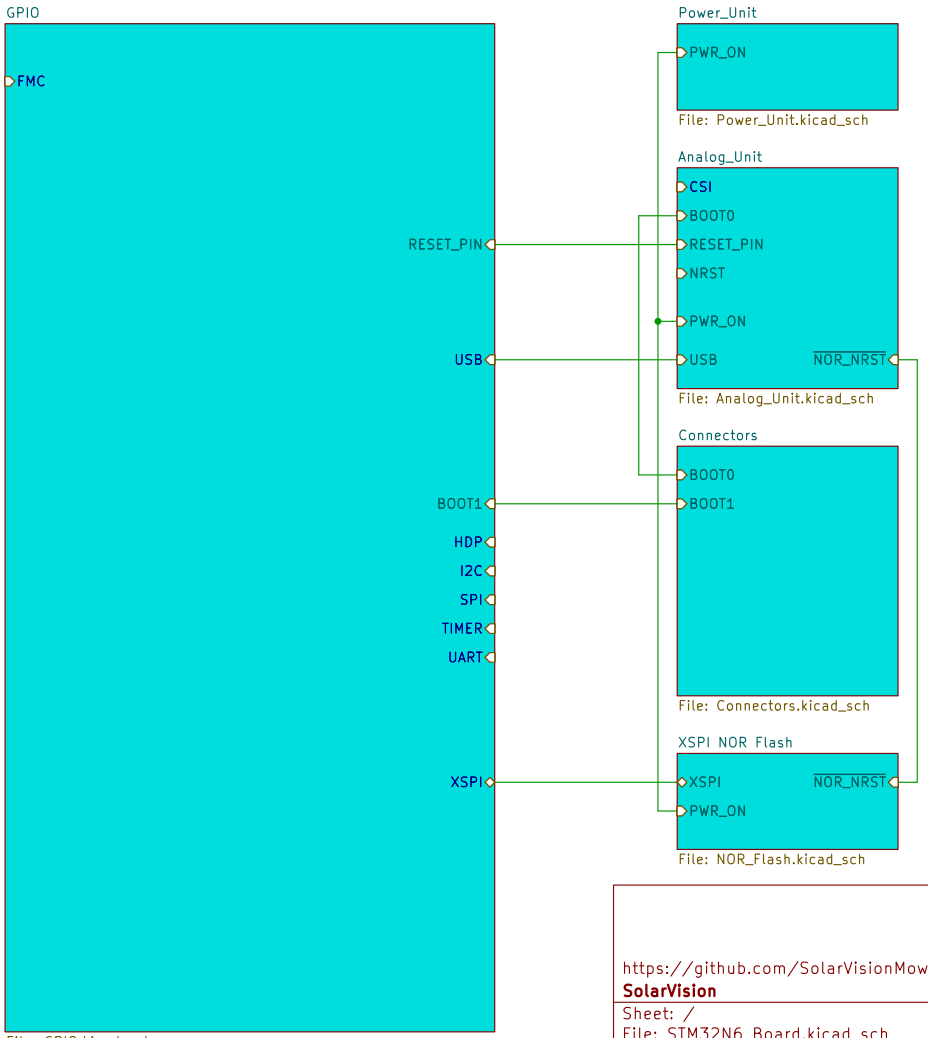

https://github.com/SolarVisionMower/SolarVision

SolarVision

Sheet: /

File: STM32N6_Board.kicad_sch

Title: SolarVision Mower – STM32N6 Board

Size: A4	Date:	**Rev: v1.0**
KiCad E.D.A. 9.0.2		Id: 1/6

STM32N6 Power Unit

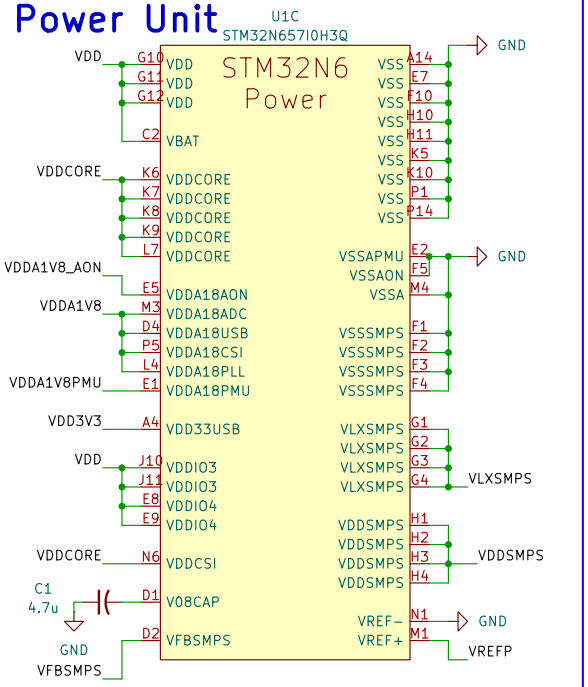

Bypass Capacitors and Connectors

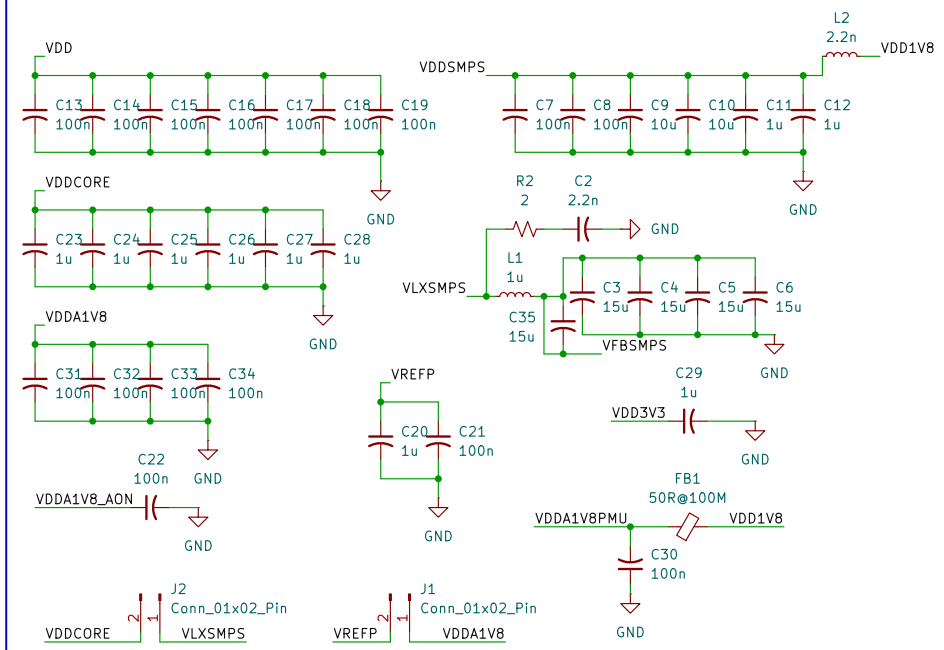

Design Notes

- VDD has 7 capacitors because:
  - 3 VDD pins
  - 2 VDDIO3 pins
  - 2 VDDIO4 pins
- VDDCORE has 6 capacitors because:
  - 5 VDDCORE pins
  - 1 VDDCSI pin
- VDDA1V8 has 4 capacitors because:

- Power input to board is 5V @ 3A max
- Total of 5 LDOs and Bucks for 3v3 and 1v8
  - Buck converter for 1v8 VDD, always on
  - LDO for 1v8 VDDA18AON, always on
  - LDO for 3v3 VDD3V3 (USB pin)
  - LDO for 1v8 VDDA1V8
  - LDO for 1v8 VDD1V8
- All LDO's and Bucks should be adjustable and with enable pins. Permanently enable VDD and VDDA18AON

- Ferrite bead (FB1) requirements:
  - 50 Ohms at 100MHz
  - At least 400mA I_DC
  - Max 0.1 Ohms DCR

- VREFP is reference for internal ADC. J1 is a jumper to VDDA1V8, use separate reference if desired.

- Forgot to add in symbols:
  - LDO's are SPX5205-ADJ
  - Buck is MC34064-ACD-TR
  - Schottky diode is 1A 40V per the datasheet. Preferably 0402 package
  - Ferrite will be ILB1206ER500V

Power Supplies

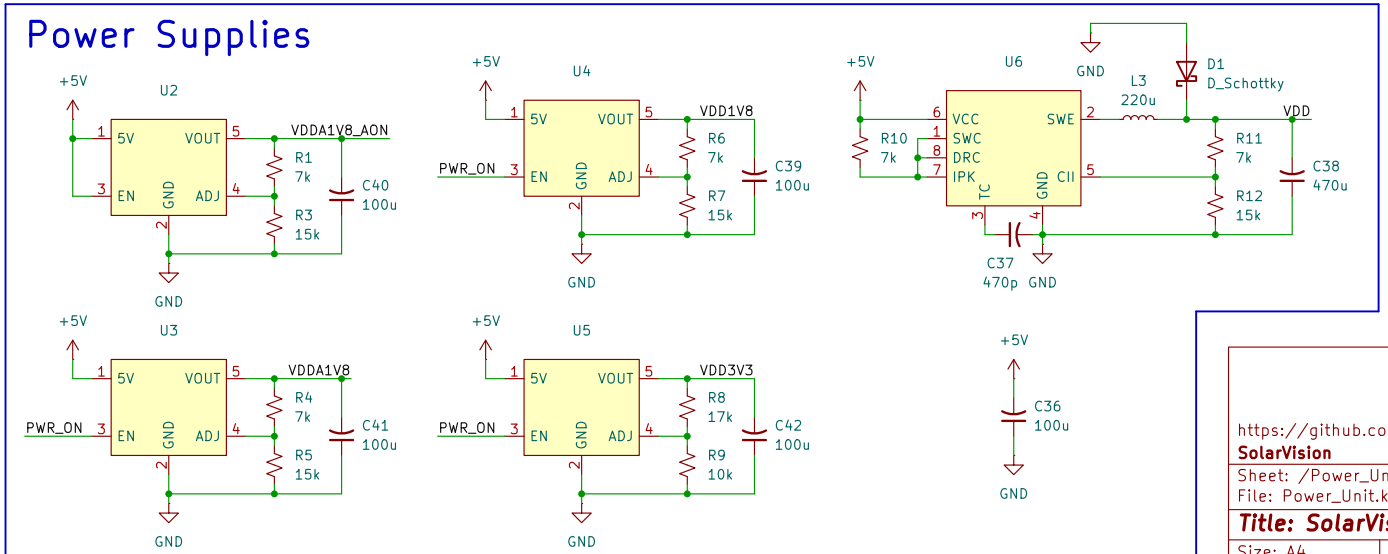

Global/Hierarchical Labels

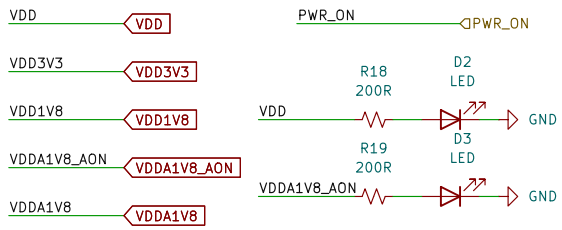

https://github.com/SolarVisionMower/SolarVision

SolarVision

Sheet: /Power_Unit/

File: Power_Unit.kicad_sch

Title: SolarVision Mower – STM32N6 Board – Power Unit

Size: A4	Date:	**Rev: v1.0**
KiCad E.D.A. 9.0.2		Id: 2/6

STM32N6 GPIO Pins

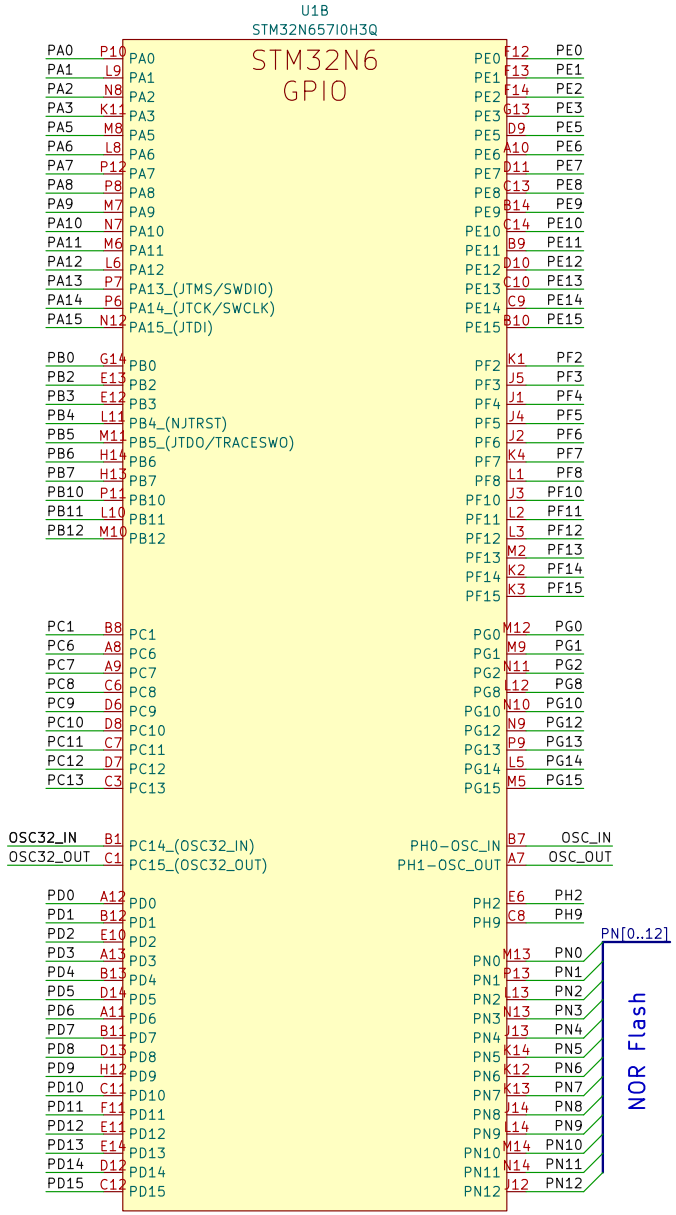

Peripheral Connections

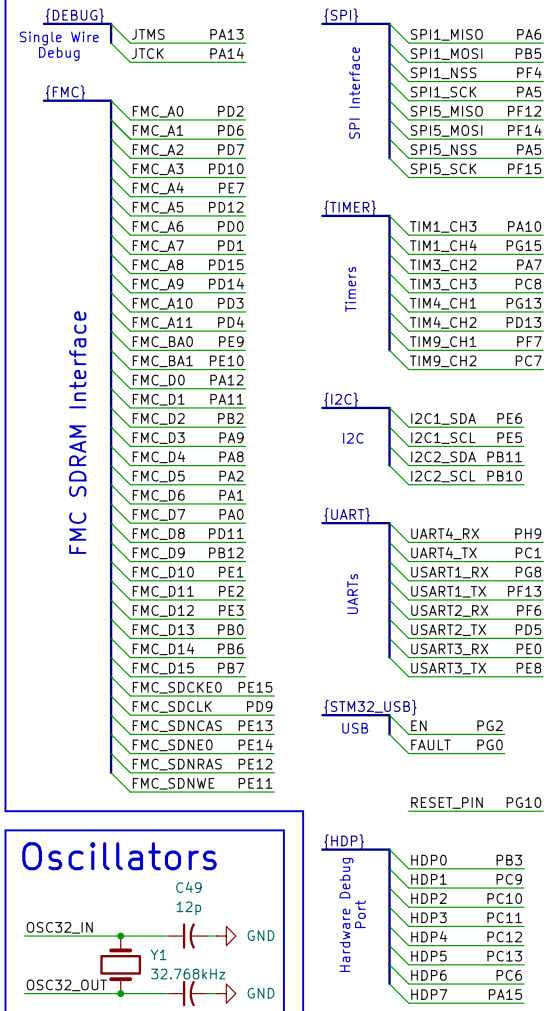

Oscillators

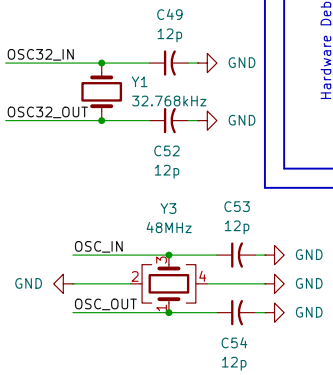

Design Notes

- Pins PN[0..12] are used for NOR flash interfacing via XSPI interface
- CSI and USB buses are in the Analog_Unit sheet.
- FMC pins will NOT be put on headers. They are internal only, and are used to connect the 128Mb IS42 SDRAM
- Some UART headers (1, 2, 3) are 'USART' and can operate synchronously. However, some USART clock pins have been used up, so consult CubeMX first.
- DP and DM pins (also CC pins) for the USB interface are in the Analog schematic.
- 2k Ohm resistors have been used to pullup I2C pins, layout deems that any 0402 size resistor should work. Same for oscillator caps.
- HDP pins (Hardware Debug) will be connected to upward facing headers, NOT connected to the main board. So even though the connectors will will be in the connectors sheet, they are not designed to connect to the main board.
- CSI connector will also be on the top of the PCB alone. Not going to main board.
- All non-power pins can be configured as GPIO's, but only timer pins can operate as analog input/output pins, generating PWM (upto 1v8).

I2C Pullup Resistors

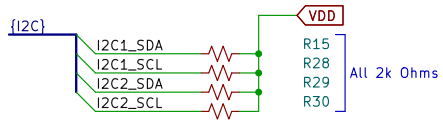

Global/Hierarchical Labels

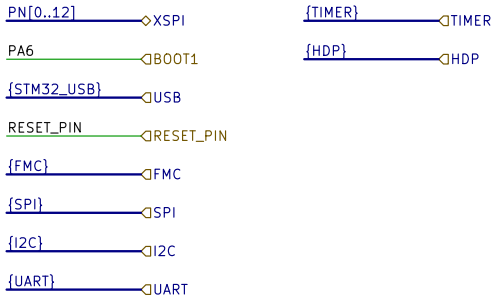

https://github.com/SolarVisionMower/SolarVision

SolarVision

Sheet: /GPIO/

File: GPIO.kicad_sch

Title: SolarVision Mower – STM32N6 Board – GPIO

Size: A4	Date:	**Rev: v1.0**
KiCad E.D.A. 9.0.2		Id: 3/6

STM32N6 Analog Unit

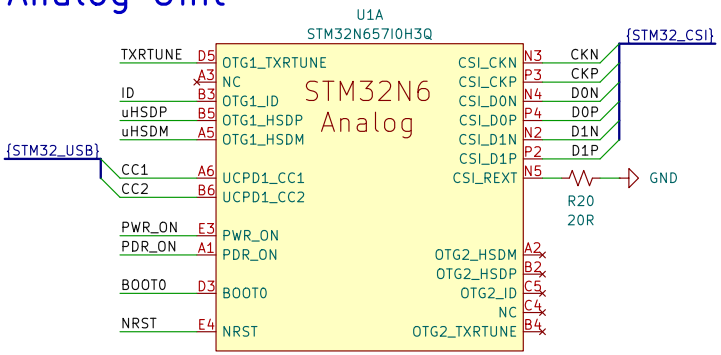

Differential Pair Noise Filtering

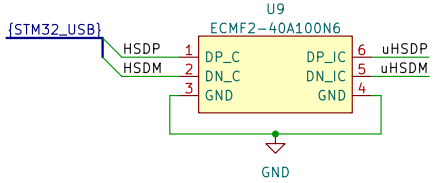

VBUS Power

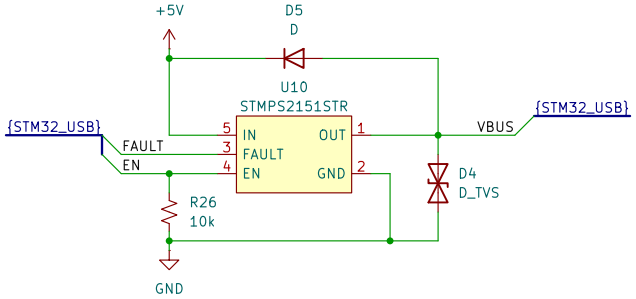

Pull-up/down Resistors

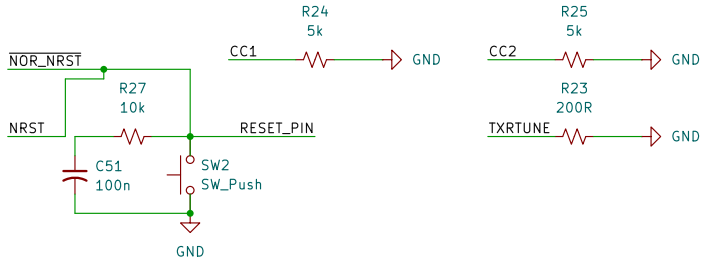

Labels and Status LEDs

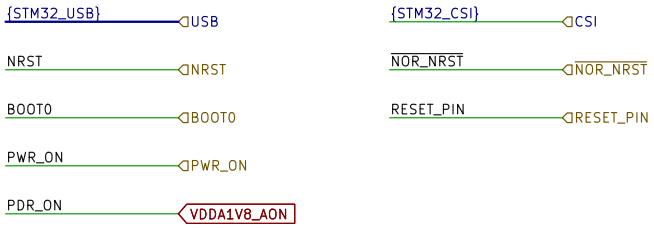

Design Notes

- The USB HSDM, HSDP, uHSDM, and uHSDP traces are differential pairs with 90 Ohms as differential pairs, or 45 Ohms single ended.
- The P and N pins for the CSI peripheral are also differential pairs, with 100 Ohms between each, and 50 Ohms between each and ground.
- USB C Power Delivery will be used, but may be disabled by unsoldering D5. A jumper will be accessible to toggle the board from USB device/host modes. 5V input voltage will be provided on VBUS if acting as the host.
- Unlike the MX25 Flash chip, NRST is internally pulled up via a 40k Ohm resistor. Thus, H-L time constant is 1ms, and L-H is 4ms.

https://github.com/SolarVisionMower/SolarVision

SolarVision

Sheet: /Analog_Unit/
File: Analog_Unit.kicad_sch

Title: SolarVision Mower - STM32N6 Board - Analog Unit

Size: A4	Date:	**Rev: v1.0**
KiCad E.D.A. 9.0.2		Id: 4/6

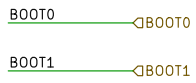

https://github.com/SolarVisionMower/SolarVision

SolarVision

Sheet: /Connectors/
File: Connectors.kicad_sch

Title:

Size: A4	Date:	**Rev: v1.0**
KiCad E.D.A. 9.0.2		Id: 5/6

MX25LM

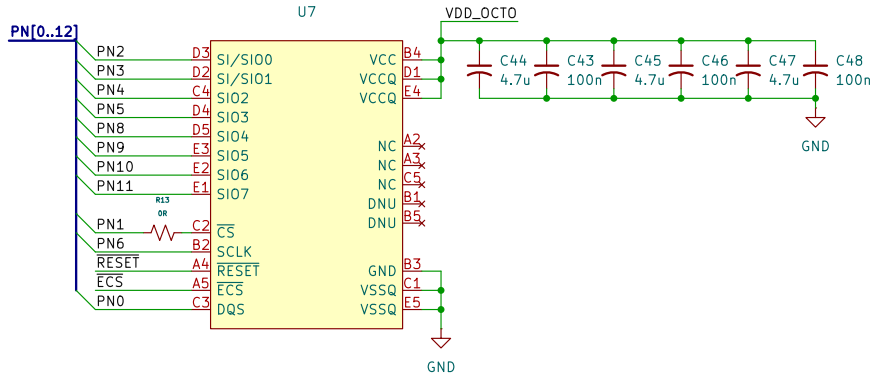

Global/Hierarchical Labels

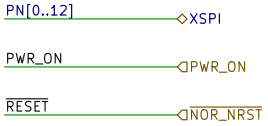

Pull-Up Resistors

Design Notes

- Chip runs on 3V, and is as such powered by the LDO below
- Capacitors C[43..48] are for all VCC pins in pairs of 4.7u and 100n. Place them close to the power pins for decoupling.
- SIO[0..7] are Serial Input/Output pins, and have to be length matched to within 50 mils, and also impedance matched to 50 Ohms for single-ended t-lines and 100 Ohms for differential pairs.
- All pins are active-low, and thus the required ones are pulled high.
- Reset button debouncing is with RC filter, 2ms time constant L-H, and 1ms H-L.

Voltage Regulator

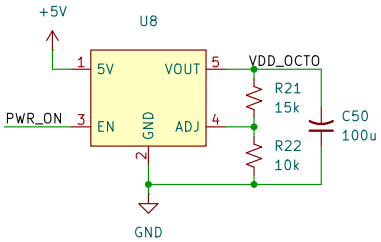

https://github.com/SolarVisionMower/SolarVision

SolarVision

Sheet: /XSPI NOR Flash/
File: NOR_Flash.kicad_sch

Title: SolarVision Mower - STM32N6 Board - NOR Flash

Size: A4	Date:	**Rev: v1.0**
KiCad E.D.A. 9.0.2		Id: 6/6