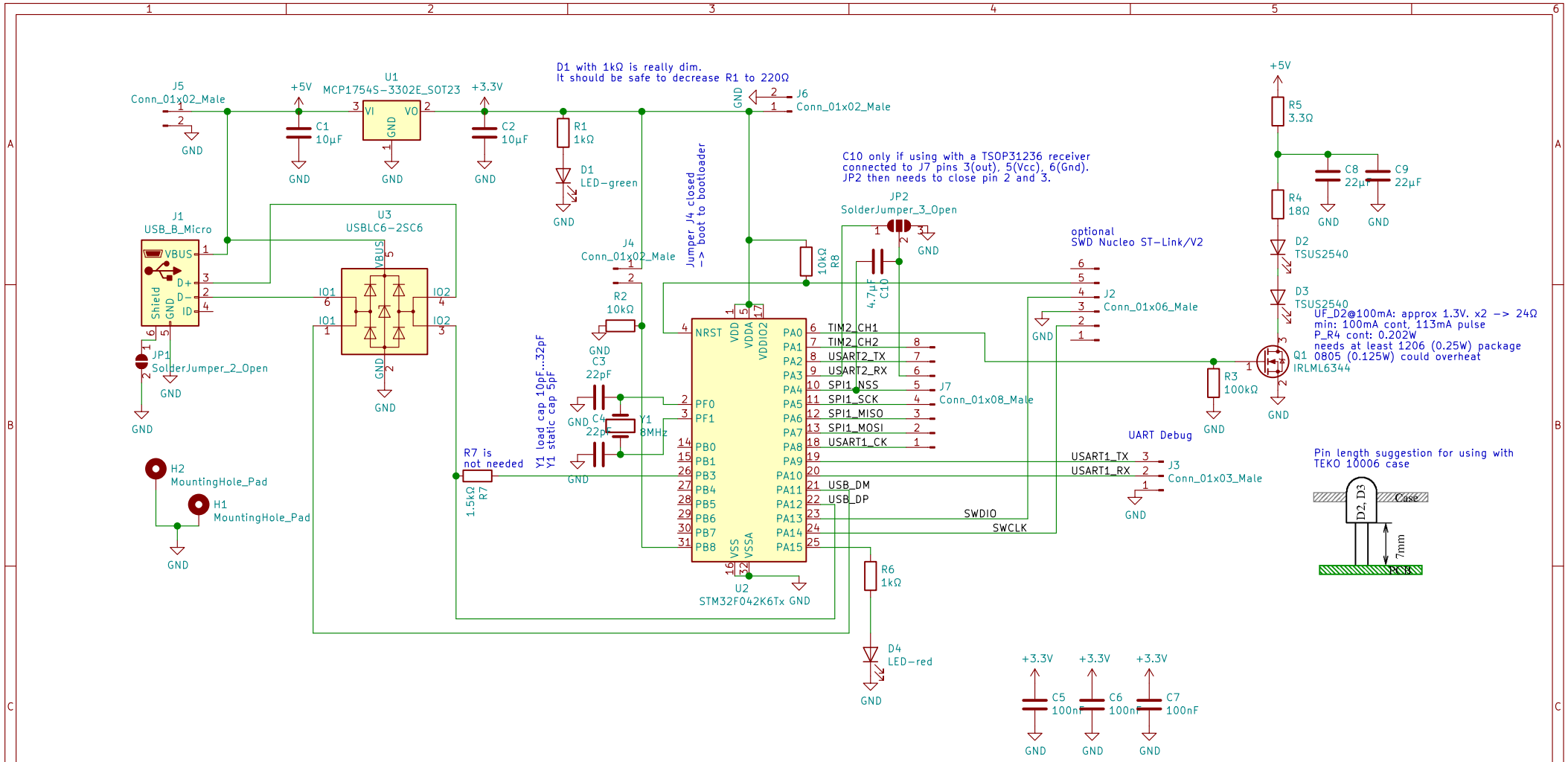

License: CC-BY-SA 3.0 DE

(c) 2020 by Malte Marwedel

Sheet: /
File: irUsbSender-v1-1-1.sch

Title: IRUSB

Size: A4	Date: 2021-10-13	**Rev: 1.1.1**
KiCad E.D.A. kicad 5.0.2+dfsg1-1		Id: 1/1