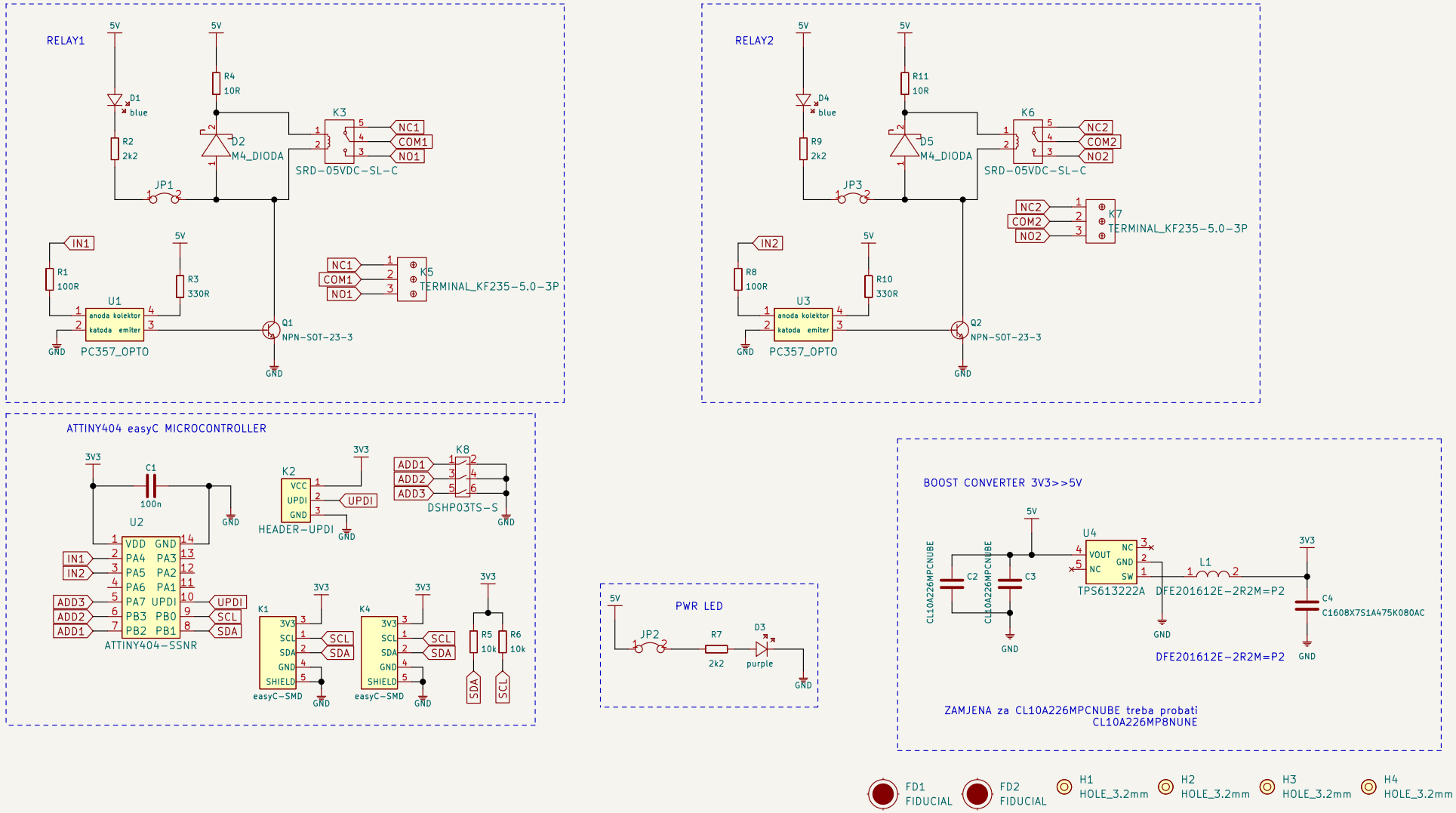

Need help? support.soldered.com | Store: soldered.com | Custom PCBs: pcb.soldered.com | Learn: blog.soldered.com

2-channel relay board with easy

SOLDERED

Version: V1.2.0	Date: 2024-05-17	Sheet: 1/1	www.solde.red/333025