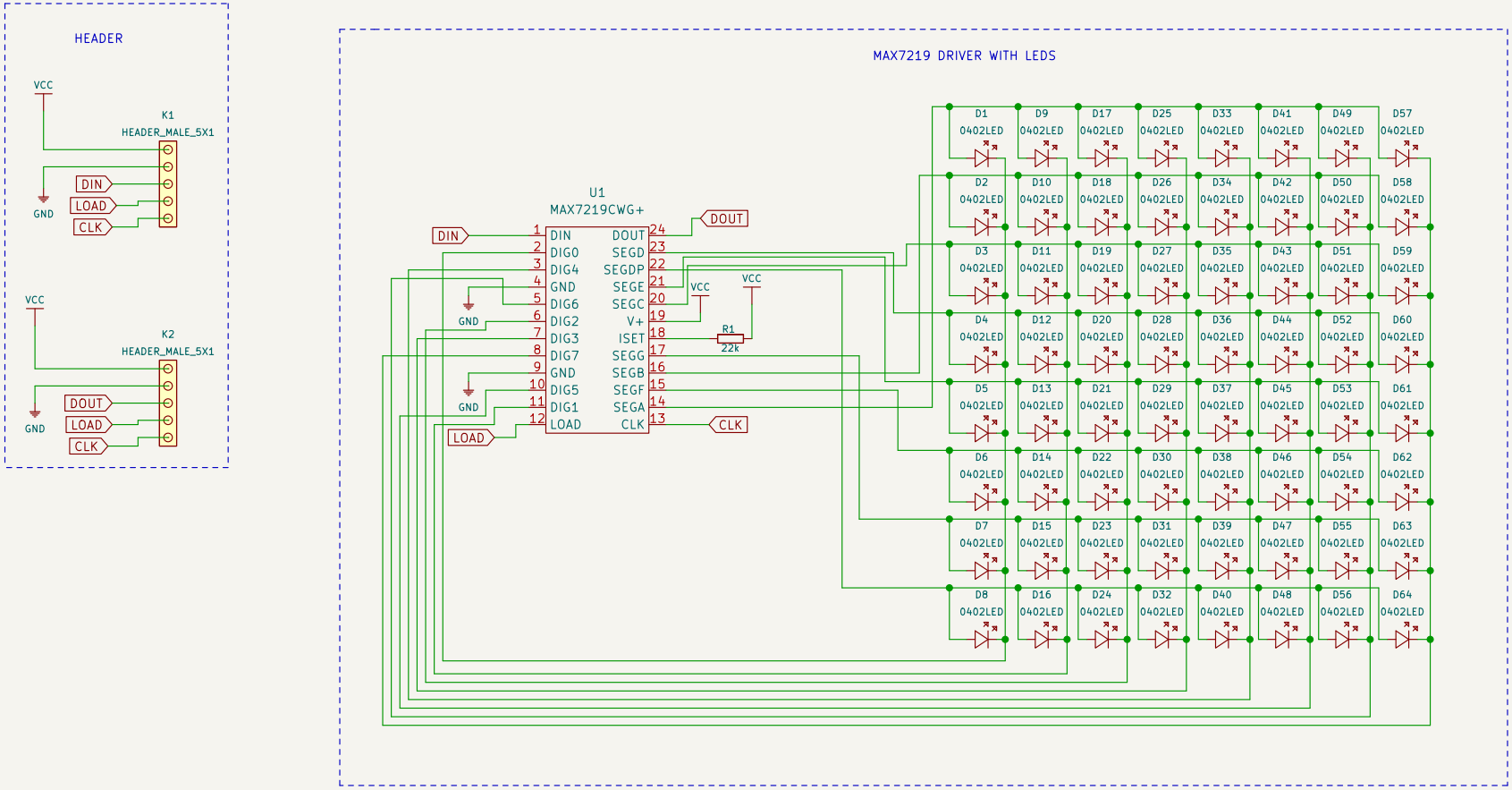

FD1 FIDUCIAL

H1 HOLE_3.2mm

H2 HOLE_3.2mm

Need help? support.soldered.com | Store: soldered.com | Custom PCBs: pcb.soldered.com | Learn: blog.soldered.com

8x8 LED matrix Red MAX7219 bo

SOLDERED

Version: V1.0.0.	Date: 2021-09-08	Sheet: 1/1	www.solde.red/333149