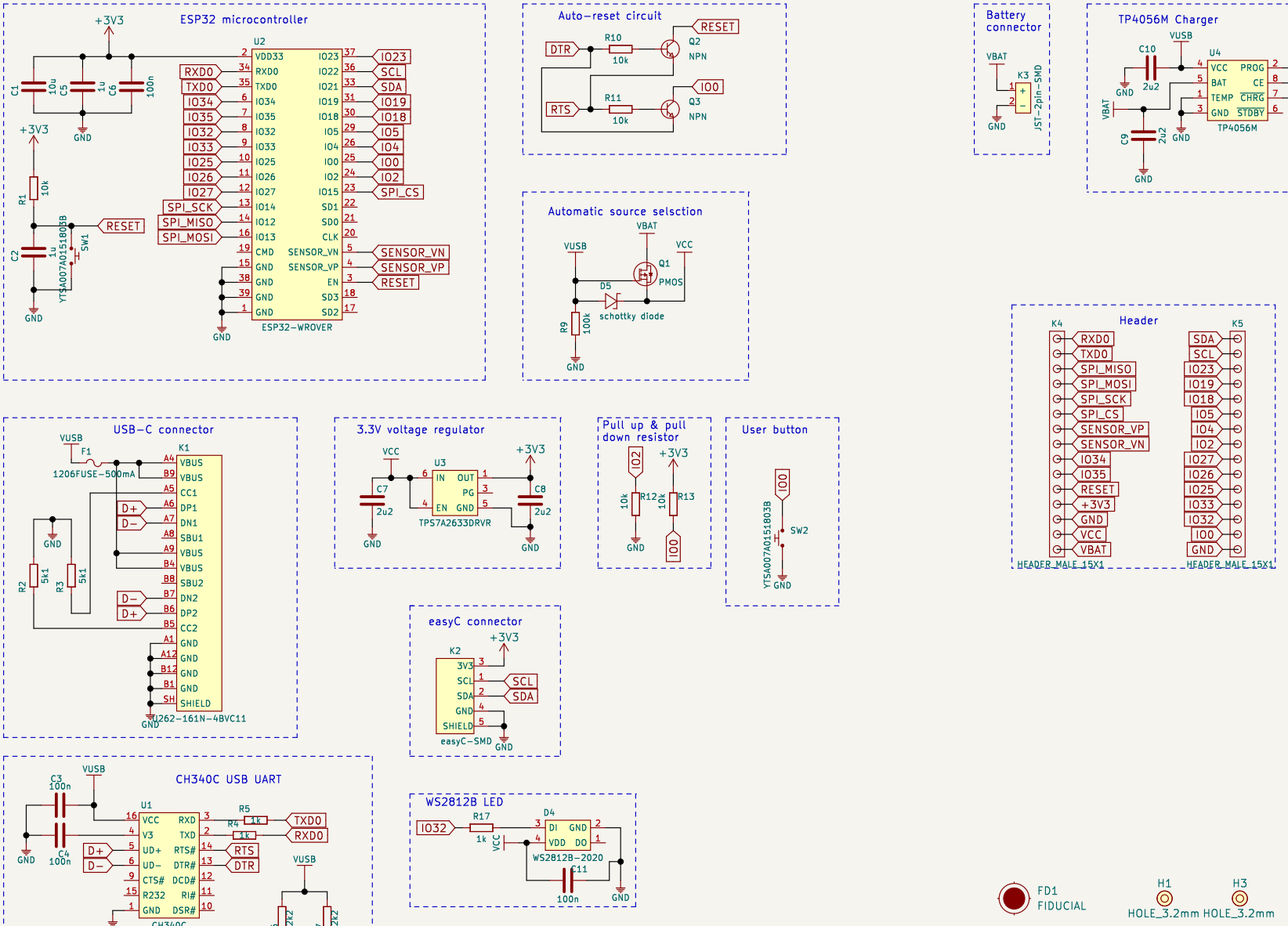

Need help? support.soldered.com | Store: soldered.com | Custom PCBs: pcb.soldered.com | Learn: blog.soldered.com

Dasduino CONNECTPLUS

Soldered

Version: v1.1.1.	Date: 2021-07-15	Sheet: 1/1	www.solde.red/333033