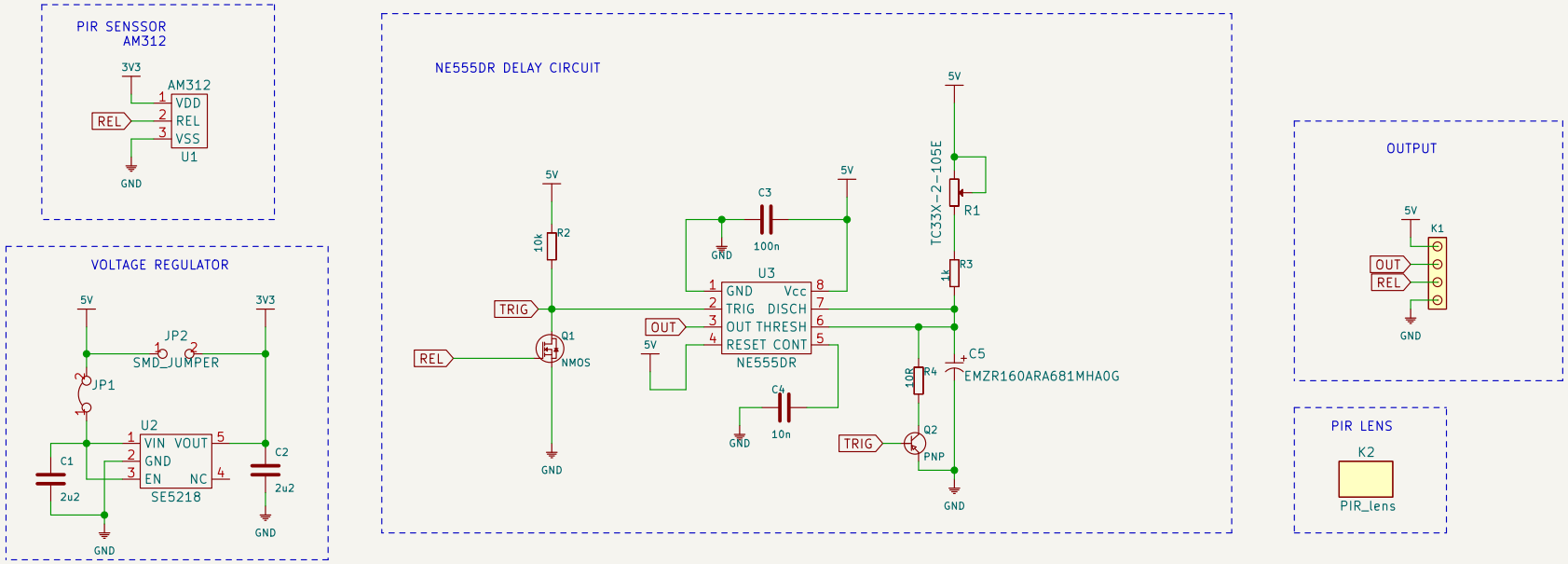

FD1 FIDUCIAL

H1 HOLE_3.2mm

H2 HOLE_3.2mm

Need help? support.soldered.com | Store: soldered.com | Custom PCBs: pcb.soldered.com | Learn: blog.soldered.com

PIR Movement sensor board

SOLDERED

Version: v2.2.0.	Date: 2023-05-18	Sheet: 1/1	www.solde.red/333083