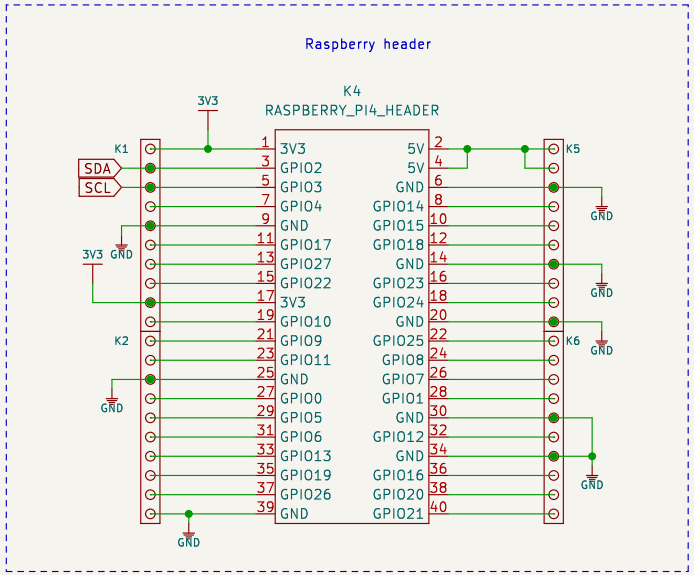

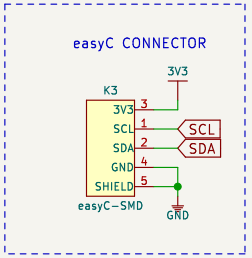

FD1 FIDUCIAL

H1 HOLE_3.2mm

H2 HOLE_3.2mm

Need help? support.soldered.com | Store: soldered.com | Custom PCBs: pcb.soldered.com | Learn: blog.soldered.com

Raspberry Pi breadboard breakout

Soldered

Version: v1.1.1.	Date: 2021-10-04	Sheet: 1/1	www.solde.red/333135