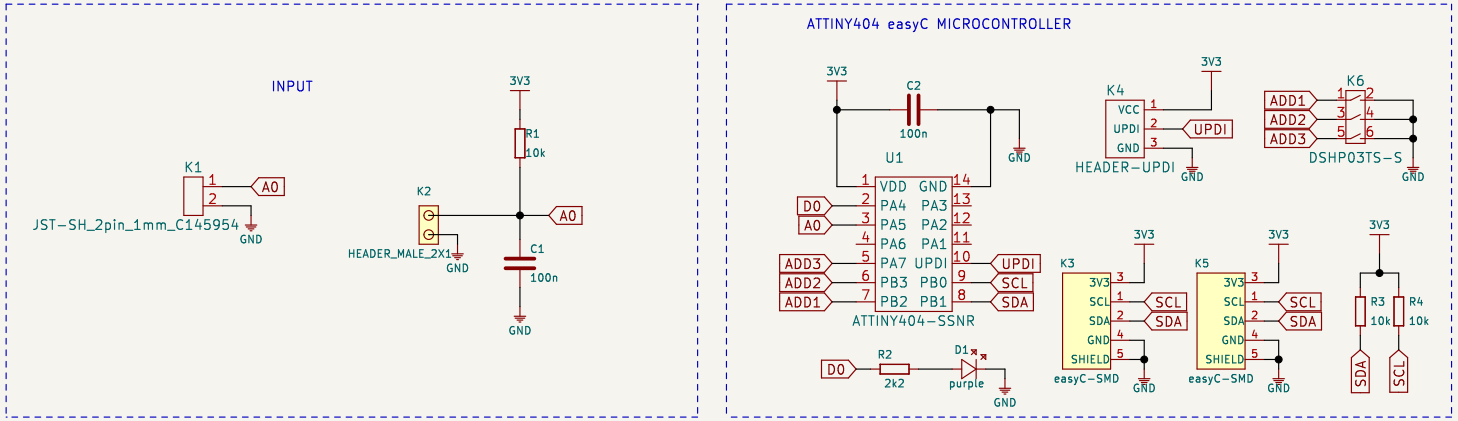

FD1 FIDUCIAL H1 HOLE_3.2mm H2 HOLE_3.2mm H3 HOLE_3.2mm H4 HOLE_3.2mm

Need help? support.soldered.com Store: soldered.com Custom PCBs: pcb.soldered.com Learn: blog.soldered.com

Simple light sensor board with easyC

Version: V1.1.2.	Date: 2022-02-14	Sheet: 1/1	www.solde.red/333041