MCU

MCU & GPIO expander

File: MCU.kicad_sch

CTRL & COMS

USB-C,Battery conection, USB to UART,
Voltage Regulator,
ON/OFF circuit,
PWR LED, Battery charger,
Reset circuitry

File: CTRL & COMS.kicad_sch

SD_RTC

SD card, RTC &
WakeUp Button

File: SD_RTC.kicad_sch

E-paper

E-paper panel

File: E-paper.kicad_sch

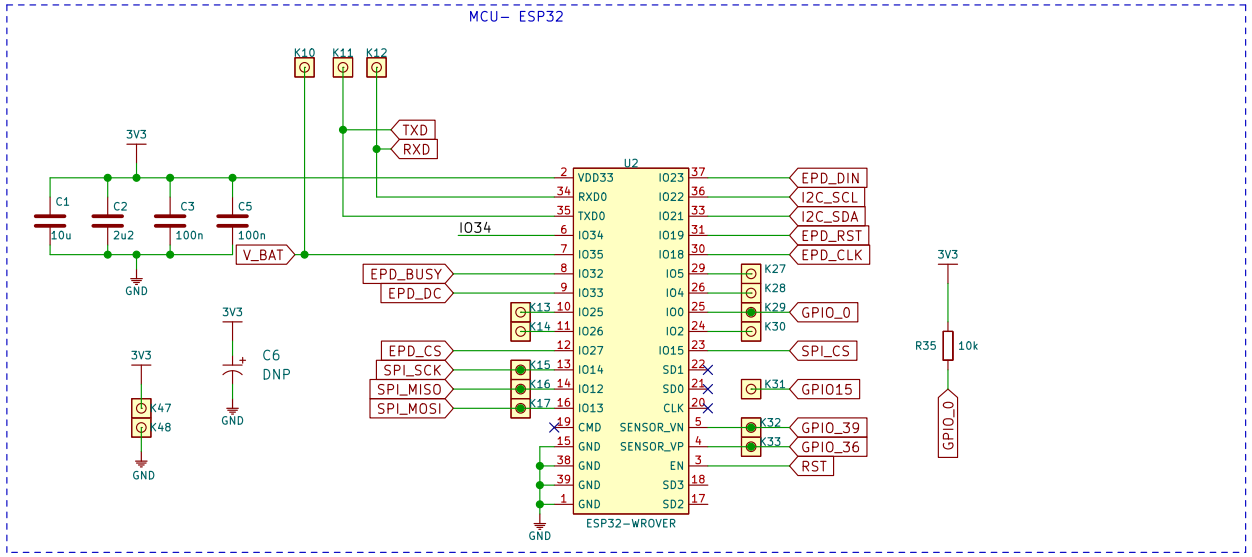

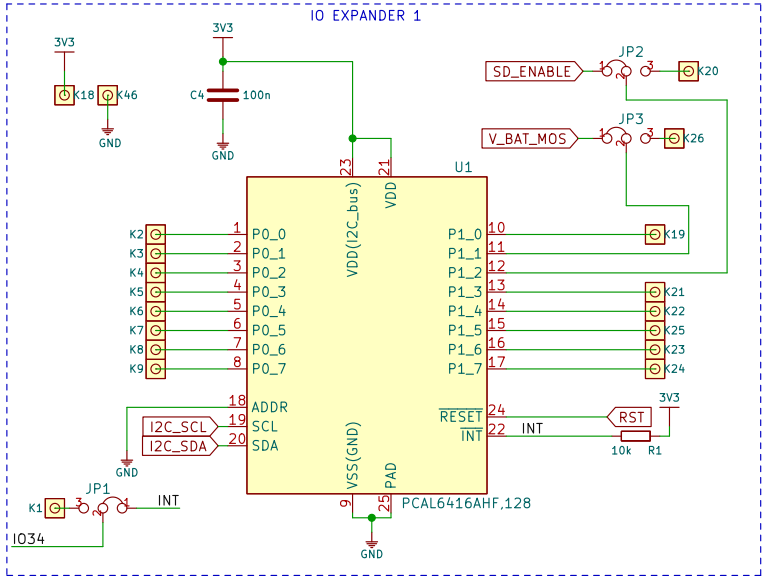

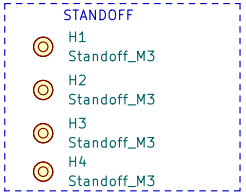

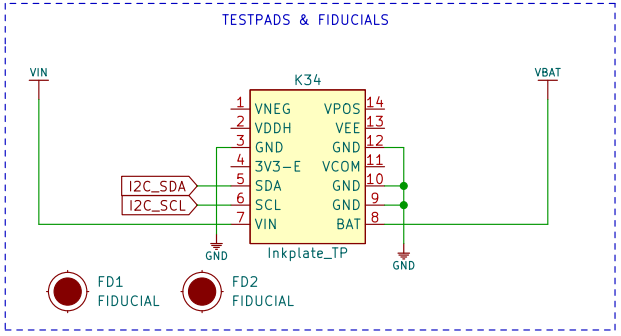

Need help? support.soldered.com | Store: soldered.com | Custom PCBs: pcb.soldered.com | Learn: blog.soldered.com

Soldered Inkplate 6COLOR

SOLDERED

Version: V1.2.0.	Date: 2022-12-09	Sheet: 2/5	www.solde.red/333238

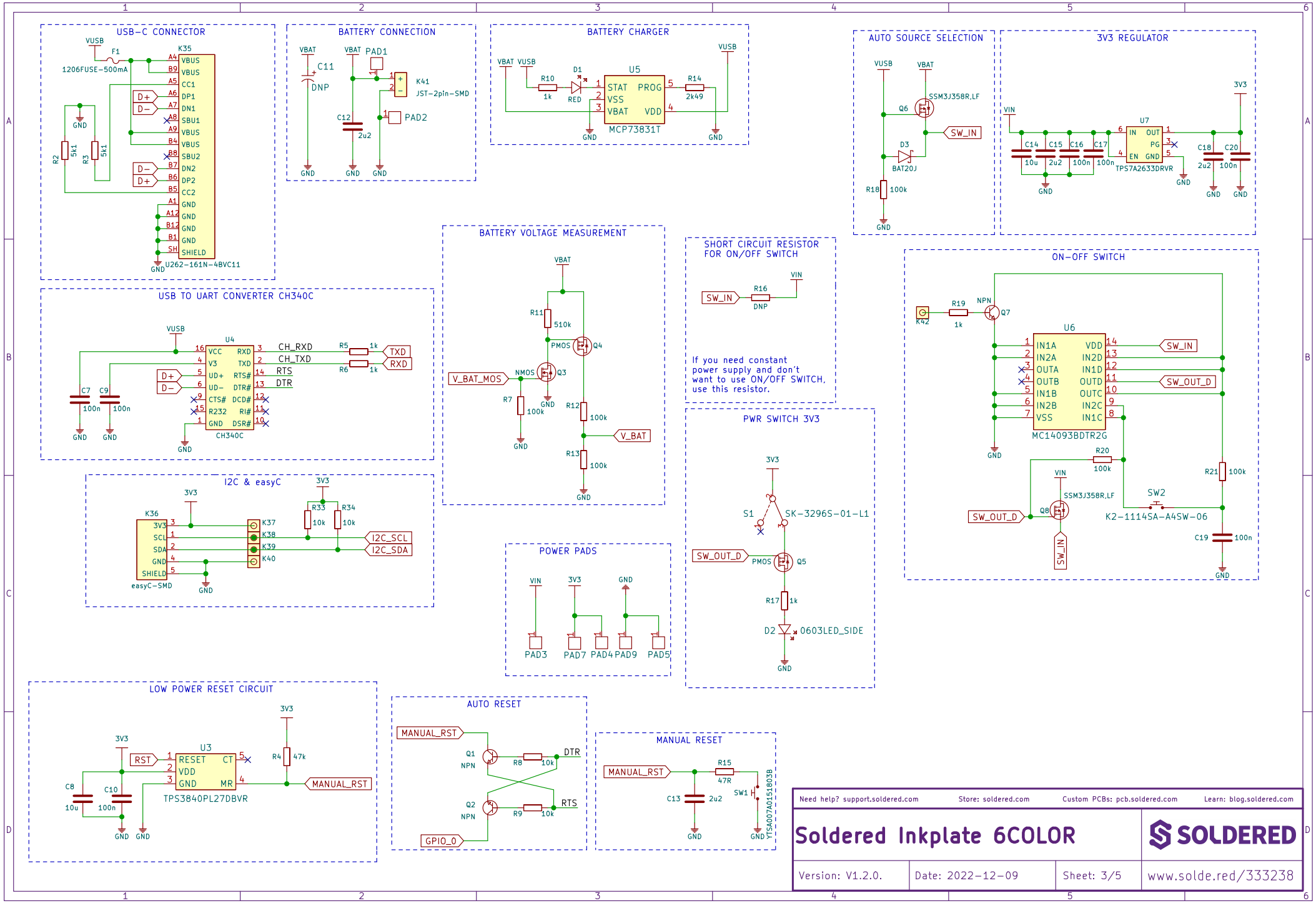
USB-C CONNECTOR
VUSB
F1
1206FUSE-500mA
K35
VBUS
CC1
DP1
DN1
SBU1
SBU2
DN2
DP2
CC2
GND
SHIELD
D+
D-
R2 5k1
R3 5k1
U262-161N-4BVC11
BATTERY CONNECTION
VBAT
C11
DNP
PAD1
K41
JST-2pin-SMD
PAD2
C12 2u2
BATTERY CHARGER
VUSB
U5
STAT
PROG
VSS
VBAT
VDD
MCP73831T
R10 1k
D1 RED
R14 2k49
AUTO SOURCE SELECTION
Q6
SSM3J358R,LF
SW_IN
D3
BAT20J
R18 100k
3V3 REGULATOR
3V3
VIN
U7
IN
OUT
PG
EN
TPS7A2633DRVR
C14 10u
C15 2u2
C16 100n
C17 100n
C18 2u2
C20 100n
USB TO UART CONVERTER CH340C
U4
VCC
V3
UD+
UD-
CTS#
R232
GND
RXD
TXD
RTS#
DTR#
DCD#
RI#
DSR#
CH340C
CH_RXD
CH_TXD
RTS
DTR
R5 1k
R6 1k
TXD
RXD
C7 100n
C9 100n
BATTERY VOLTAGE MEASUREMENT
R11 510k
PMOS
Q4
NMOS
Q3
V_BAT_MOS
R7 100k
R12 100k
R13 100k
V_BAT
SHORT CIRCUIT RESISTOR FOR ON/OFF SWITCH
SW_IN
R16
DNP
If you need constant power supply and don't want to use ON/OFF SWITCH, use this resistor.
ON-OFF SWITCH
K42
R19 1k
NPN
Q7
U6
IN1A
IN2A
OUTA
OUTB
IN1B
IN2B
VSS
VDD
IN2D
IN1D
OUTD
OUTC
IN2C
IN1C
MC14093BDTR2G
R20 100k
R21 100k
SW_OUT_D
Q8
SSM3J358R,LF
SW2
K2-1114SA-A4SW-06
C19 100n
I2C & easyC
K36
3V3
SCL
SDA
GND
SHIELD
easyC-SMD
K37
K38
K39
K40
R33 10k
R34 10k
I2C_SCL
I2C_SDA
PWR SWITCH 3V3
S1
SK-3296S-01-L1
Q5
R17 1k
D2
0603LED_SIDE
POWER PADS
VIN
PAD3
PAD7
PAD4
PAD9
PAD5
LOW POWER RESET CIRCUIT
U3
RESET
VDD
GND
CT
MR
RST
TPS3840PL27DBVR
R4 47k
MANUAL_RST
C8 10u
C10 100n
AUTO RESET
Q1
NPN
Q2
R8 10k
R9 10k
DTR
RTS
GPIO_0
MANUAL RESET
R15 47R
C13 2u2
SW1
TS5A0070151803B
Need help? support.soldered.com
Store: soldered.com
Custom PCBs: pcb.soldered.com
Learn: blog.soldered.com
Soldered Inkplate 6COLOR
SOLDERED
Version: V1.2.0.
Date: 2022-12-09
Sheet: 3/5
www.solde.red/333238

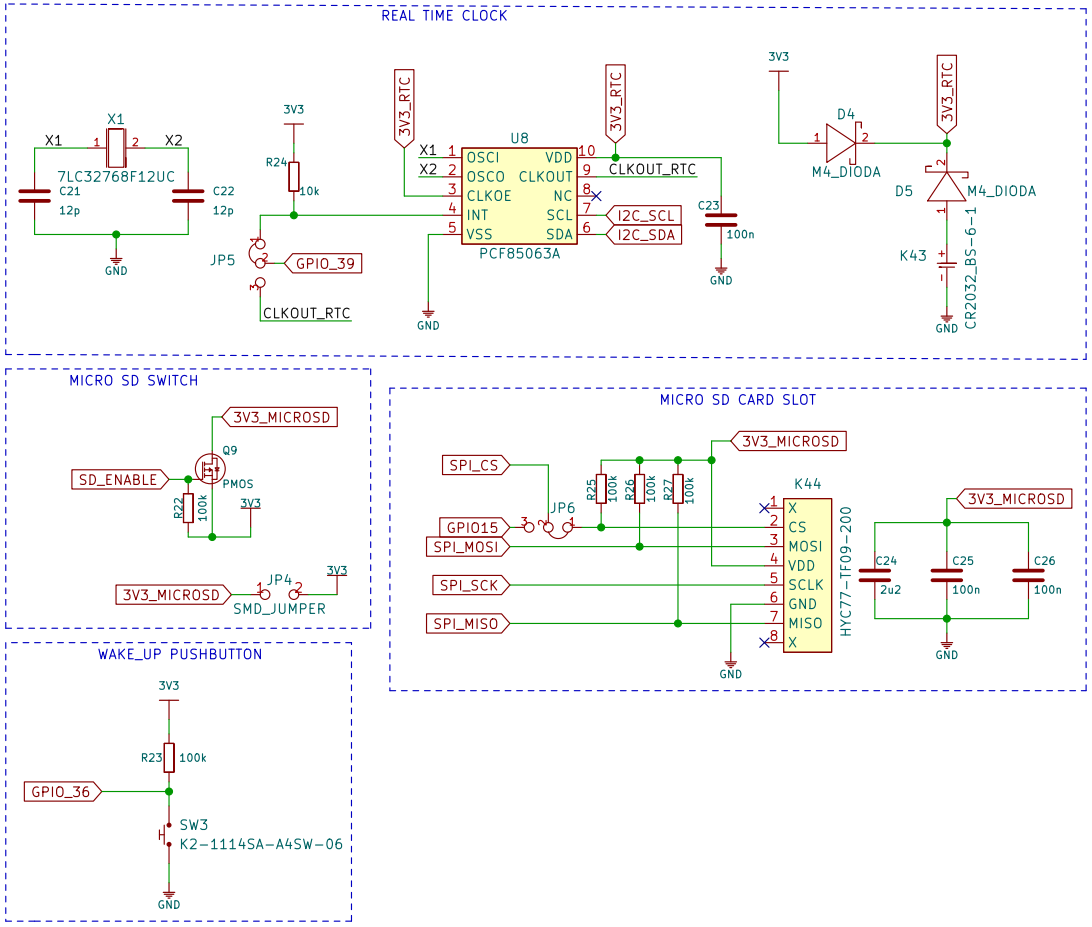

Need help? support.soldered.com | Store: soldered.com | Custom PCBs: pcb.soldered.com | Learn: blog.soldered.com

Soldered Inkplate 6COLOR

SOLDERED

Version: V1.2.0.	Date: 2022-12-09	Sheet: 4/5	www.solde.red/333238

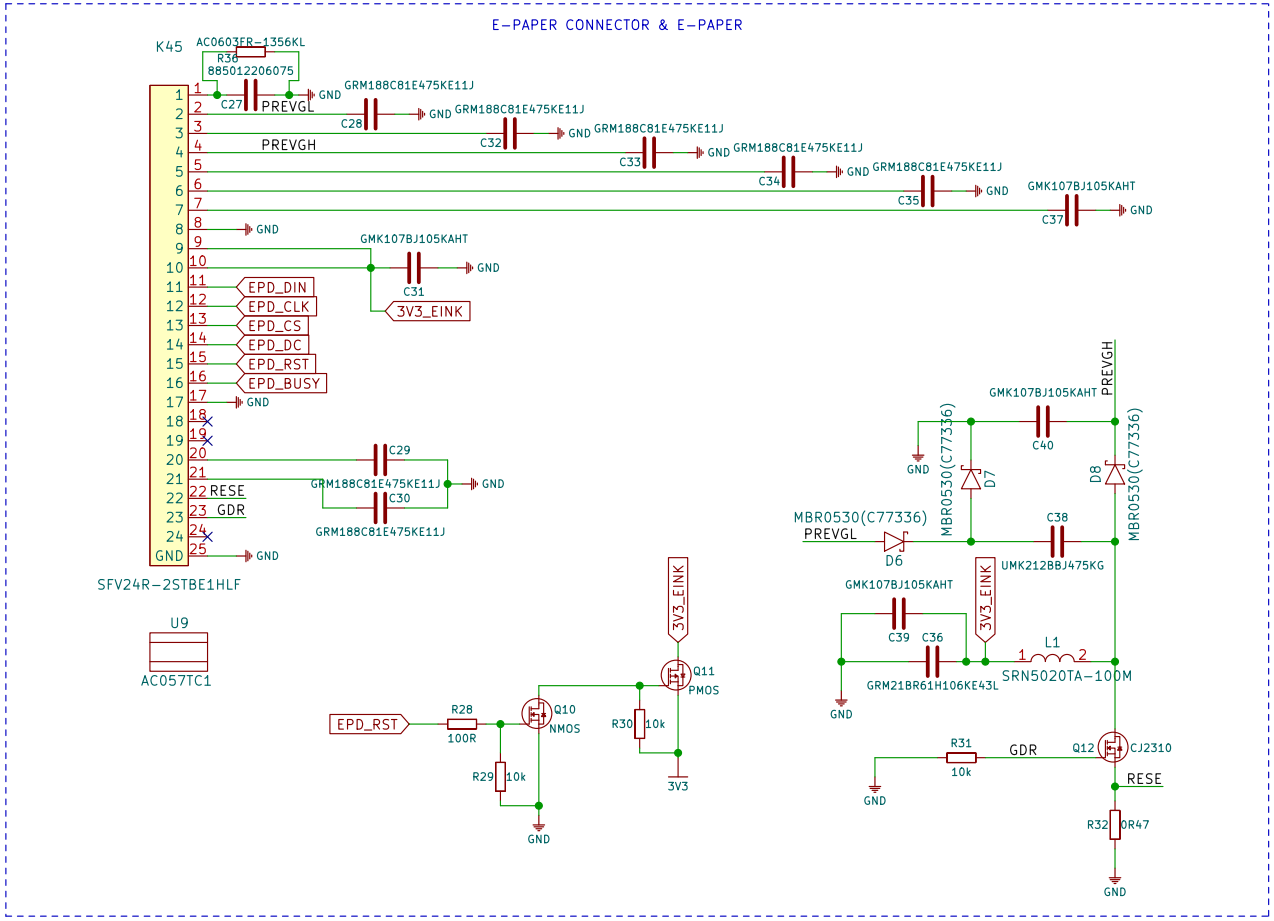

Need help? support.soldered.com | Store: soldered.com | Custom PCBs: pcb.soldered.com | Learn: blog.soldered.com

Soldered Inkplate 6COLOR

SOLDERED

Version: V1.2.0.	Date: 2022-12-09	Sheet: 5/5	www.solde.red/333238