Lab 04

Common Drain Frequency Response

Analog IC Design Course – Cadence Tools (Self Study)

Student Information

Name	Kerollos Saad Thomas Shokralla	كيرُلُسْ سَعْد تُومَاس شُكرَالله
Email	2501030@eng.asu.edu.eg	
Date	*February 22, 2026*	

Under Guidance and Help of My More Experienced Friends

Labs Provided by **Dr. Hesham Omran** via Master-Micro.com

Thanks to everyone who has helped me,
I pledge to help others as well.

Done during my **Post Graduate MSc. Program** in
Electronics and Electrical Communication Engineering
at the **Faculty of Engineering – Ain Shams University**

Lab 04: Common Drain Frequency Response

Intended Learning Objectives:[1]

In this lab[2] you will:

- Design and simulate a common-drain amplifier.
- Learn how to generate and use design charts.
- Learn how to do ac, DC, and transient simulations of a CD amplifier.
- Investigate the ringing and peaking problem in a capacitive-loaded CD amplifier with a large signal source resistance (Rsig) and learn how to solve it.
- Use PMOS input transistor to avoid body effect in a CD amplifier.

Part 1: Sizing Chart

1) We can show that the intrinsic gain of a MOSFET is given by: $|Av| \approx g_m r_o = \frac{2I_D}{V_{ov}} \times \frac{V_A}{I_D} = \frac{2V_A}{V_{ov}}$

Interestingly, the gain only depends on λ and V_{ov}. However, to derive this expression we used $g_m = \frac{2I_D}{V_{ov}}$ which is based on the square-law. For a real MOSFET, if we compute V_{ov} and $\frac{2I_D}{g_m}$ they will not be equal. Let's define a new parameter called V-star (V^*) which is calculated from actual simulation data using the formula $V^* = \frac{2I_D}{g_m} \leftrightarrow g_m = \frac{2I_D}{V^*}$

For a square-law device, $V^* = V_{ov}$, However, for a real MOSFET they are not equal. The actual gain is now given by: $|Av| \approx \frac{2V_A}{V^*}$

The lower the V^* the higher the gain, but the larger the area and the lower the speed. An often used sweet-spot that provides good compromise between different trade-offs is $V^* = 200\ mV$.

2) We want to design CD amplifier with the parameters below.

Parameter	0.13um CMOS	0.18um CMOS
Input Transistor	PMOS	PMOS
L	**1 μm**	**1 μm**
V^*	**200 mV**	**200 mV**
Supply	**1.2 V**	**1.8 V**
Current consumption	**10 μA**	**10 μA**

$$Put\ L = 1\ \mu m$$

Again, I decided – in this lab – to use the **umc13mmrf** PDK (Process Design Kit), which is a 130nm process technology, instead of the **ee214b.sp** file. The reason is a matter of preference.

[1] *COLOR CODES:* Orange (steps) -- Blue (output) -- Green (comments / observations) – White (equations).

[2] **Cadence Virtuoso** software on a Linux® Debian 8 Virtual Machine is used.

3) The remaining variable in the design is to calculate W. Since the square-law is not accurate, we cannot use it to determine the sizing. Instead, we will use a sizing chart generated from simulation.

Create a test-bench for PMOS transistor as shown below (we will use PMOS only in this lab). Use $\boldsymbol{W}$ = 10 $\boldsymbol{\mu m}$ (we will understand why shortly) and $\boldsymbol{L}$ = 1 $\boldsymbol{\mu m}$ (the same L selected before).

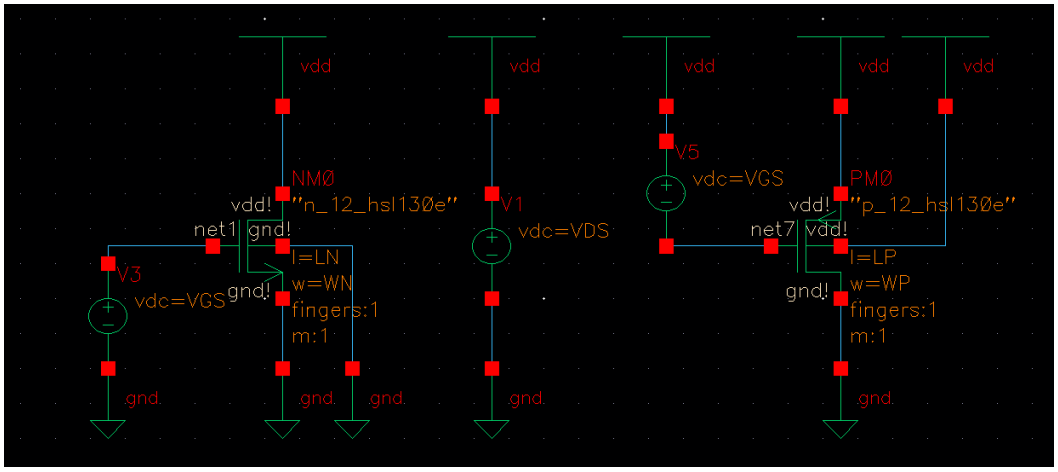

4) Sweep VGS from $0\ to\ \approx V_{TH} + 0.4V$ with 10mV step. Set $V_{DS} = V_{DD}/2$.

$$V_{TH} + 0.4V \approx 0.87\,V\ [let\ it\ be\ 1V], \qquad V_{DD} = 1.2\,V, \qquad V_{DS} = 0.6\,V$$

5) We want to compare $\boldsymbol{V^* = 2I_D/g_m}$ and $\boldsymbol{V_{ov} = V_{GS} - V_{TH}}$ by plotting them overlaid. Use the calculator to create expressions for $\boldsymbol{V^*}$ and $\boldsymbol{V_{ov}}$. You can save the expressions to reuse them later.

The Blue Curve is $\boldsymbol{V_{ov} = V_{GS} - V_{TH}}$

```
(v("PM0:vgs" ?result "dc") - v("PM0:vth" ?result "dc"))
```

The Green Curve is $\boldsymbol{V^* = 2I_D/g_m}$

```
(2 / (getData("PM0:gm" ?result "dc") / getData("PM0:id" ?result "dc")))
```

The difference is that $\boldsymbol{V^*}$ takes a lot of factors into consideration, unlike the simple $\boldsymbol{V_{ov}}$ from square law.

6) Plot $\boldsymbol{V^*}$ and $\boldsymbol{V_{ov}}$ overlaid vs. $\boldsymbol{V_{GS}}$. Make sure the y-axis of both curves has the same range. You will notice that at the beginning of the strong inversion region, $\boldsymbol{V^*}$ and $\boldsymbol{V_{ov}}$ are relatively close to each other (i.e., square-law is relatively valid). For deep strong inversion (large $\boldsymbol{V_{ov}}$: velocity saturation and mobility degradation) or weak inversion (near-threshold and sub-threshold operation) the behavior is quite far from the square-law.

The y-axes ranges are (300mV to -1.0V) and x-axis is (0 to 1V). For PMOS.

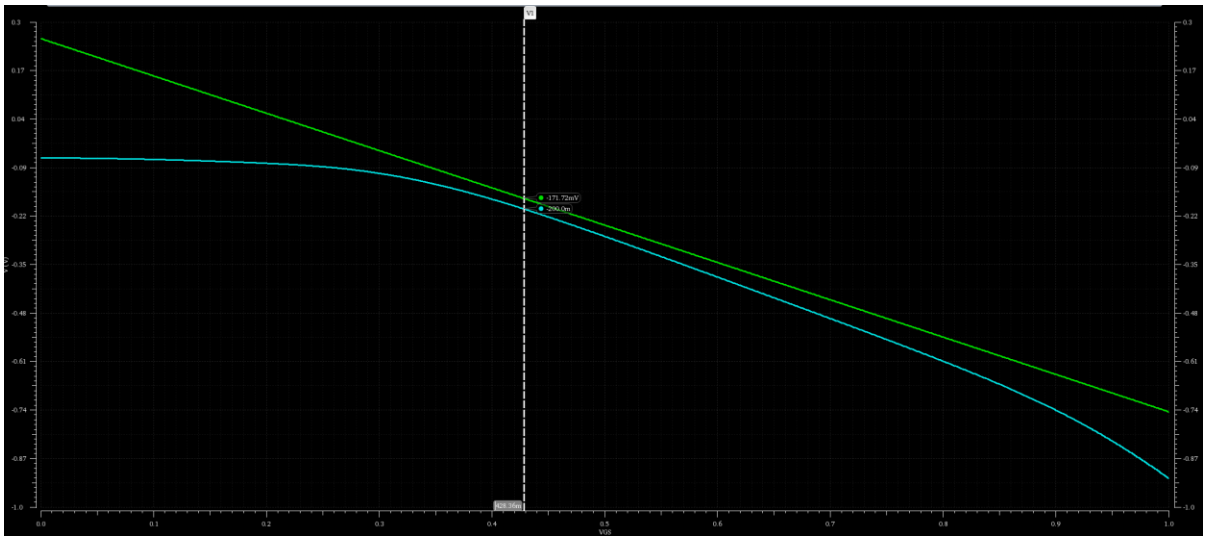

7) An often used sweet-spot that provides good compromise between different trade-offs is $\boldsymbol{V^*} = 200\ mV$. On the $\boldsymbol{V^*}$ and $\boldsymbol{V_{ov}}$ chart locate the point at which $\boldsymbol{V^*} = 200\ mV$. Find the corresponding $\boldsymbol{V_{ovQ}}$ and $\boldsymbol{V_{GSQ}}$.

$$\boldsymbol{V^* = V_Q^* = -200\ mV}$$

$$\boldsymbol{V_{ov} = V_{ov_Q} = -171.72\ mV}$$

It is noted that $\boldsymbol{V_{GS} = V_{GS_Q} = 428.36\ mV}$

8) Plot $I_D,\ g_m, and\ g_{ds}$ vs. V_{GS}. Find their values at V_{GS_Q}. Let's name these values $I_{DX}, g_{mX}, and\ g_{dsX}$.

$\boldsymbol{I_{DX} = 14.43208\ \mu A}$
$\boldsymbol{g_{mX} = 144.3168\ \mu S}$
$\boldsymbol{g_{dsX} = 636.5788\ nS}$
$\boldsymbol{r_o = 1.571\ M\Omega}$

getData("PM0:id" ?result "dc...	-14.43u
getData("PM0:gm" ?result "d...	144.3u
getData("PM0:gds" ?result "d...	636.6n
ro_p	1.571M

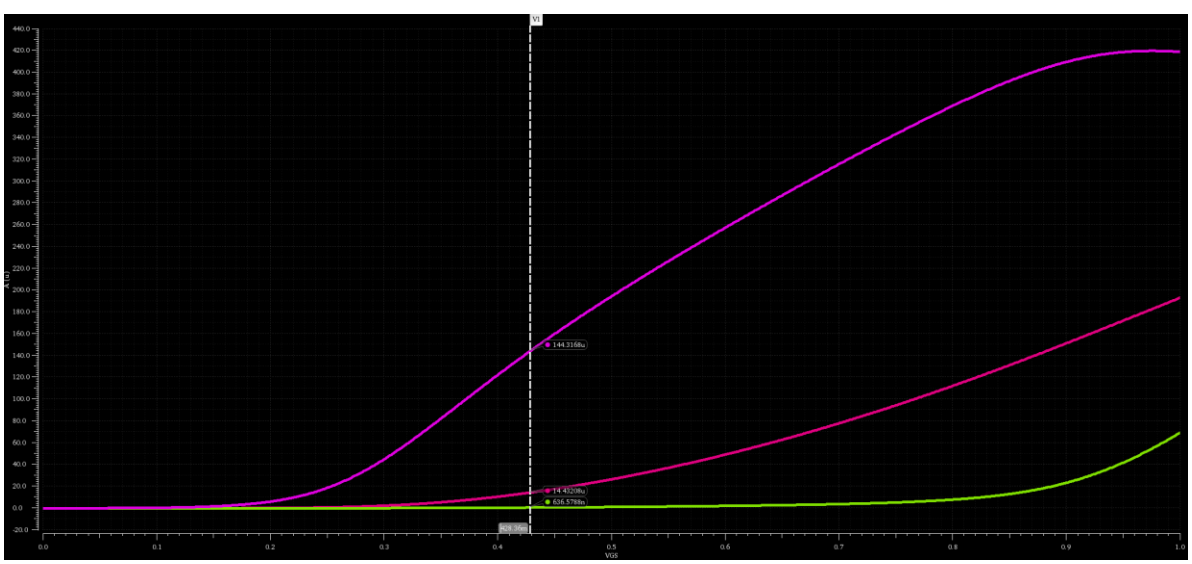

9) Now back to the assumption that we made that $\boldsymbol{W}$ = 10$\boldsymbol{\mu m}$. This is not the actual value that we will use for our design. But the good news is that $\boldsymbol{I_D}$ is always proportional to $\boldsymbol{W}$ irrespective of the operating region and the model of the MOSFET (regardless square-law is valid or no). Thus, we can use ratio and proportion (cross-multiplication) to determine the correct width at which the current will be $\boldsymbol{I_{DQ} = 10\mu A}$ as given in the specs. Calculate $\boldsymbol{W}$ as shown below.

W	$\boldsymbol{I_D}$
10 µm	I_{DX} @ V_Q^* (from the chart)
?	$I_{DQ} = 10\ \mu A$ (from the specs)

$$W = \frac{10\ \mu m \times 10\ \mu A}{I_{DX}\ @\ V_Q^*\ \text{(from the chart)}}$$

$$W = \frac{10\ \mu m \times 10\ \mu A}{\mathbf{14.43208\ \mu A}} = 6.929008\ \mu m \approx \boldsymbol{7\ \mu m}$$

10) Now we are almost done with the design of the amplifier. Note that $\boldsymbol{g_m}$ is also proportional to $\boldsymbol{W}$ as long as $\boldsymbol{V_{ov}}$ is constant. On the other hand, $\boldsymbol{r_o = 1/g_{ds}}$ is inversely proportional to $\boldsymbol{W}$ $(\boldsymbol{I_D})$ as long as L is constant. Before leaving this part, calculate $\boldsymbol{g_{mQ}}$ and $\boldsymbol{g_{dsQ}}$ using ratio and proportion (cross multiplication).

$\boldsymbol{g_{mQ}}$	W @ constant $\boldsymbol{V_{ov}}$
$\mathbf{144.3168\ \mu S}$	$10\ \mu m$
?	$7\ \mu m$

$\boldsymbol{g_{dsQ}}$	W $(\boldsymbol{I_D})$
$\mathbf{636.5788\ nS}$	$10\ \mu m$
?	$7\ \mu m$

$$\boldsymbol{g_{mQ}} = \frac{\mathbf{144.3168\ \mu S} \times 7\ \mu m}{10\ \mu m} = 101.02176\ \mu S$$

$$\boldsymbol{g_{dsQ}} = \frac{\mathbf{636.5788\ nS} \times 7\ \mu m}{10\ \mu m} = 445.60516\ nS$$

$$r_o = \frac{1}{445.60516\ nS} \approx 2.2441\ M\Omega$$

<u>Note:</u> $g_m = \boldsymbol{144.32\ \mu S} \rightarrow\ g_m = \boldsymbol{101.02\ \mu S}$
Directly proportional to W (decreased)

$r_o = \boldsymbol{1.571\ M\Omega} \rightarrow r_o \approx \boldsymbol{2.2441\ M\Omega}$
Inversely proportional to W (increased)

REVIEW ON OUR **FINAL** PARAMETERS:

$$\therefore L = 1\ \mu m, W = 7\ \mu m, V_{DS} = 0.6\ V,$$

$$\boldsymbol{V^* = V_Q^* = -200\ mV}$$

$$\boldsymbol{V_{ov} = V_{ov_Q} = -171.72\ mV}$$

$$\boldsymbol{V_{GS} = V_{GS_Q} = 428.36\ mV}$$

$$\therefore g_m = 101.02\ \mu S, \qquad g_{ds} = 445.60516\ nS, \qquad r_o = 2.2441\ M\Omega$$

Simulator Results:

v("PM0:vgs" ?result "dcOp")	-428.4m
v("PM0:vth" ?result "dcOp")	-256.6m
getData("PM0:gmoverid" ?re...	9.998
getData("PM0:id" ?result "dc...	-10.08u
getData("PM0:gm" ?result "d...	100.8u
getData("PM0:gds" ?result "d...	444.8n
ro_p	2.248M

END OF SIZING AND DESIGN

Part 2: CD Amplifier

1. OP (Operating Point) Analysis

1) Create a new schematic for the CD amplifier (the schematic is not included in the lab document and is left for the student as an exercise). Use a PMOS and use a 10 μA ideal current source for biasing (note that the current source will be connected to the source terminal). Connect the source to the bulk. Use $L = 1\mu m$ and W as determined in Part 1 ($7\mu m$). Use $C_L = 2pF$, $R_{sig} = 2M\Omega$ and a DC input voltage = 0V.

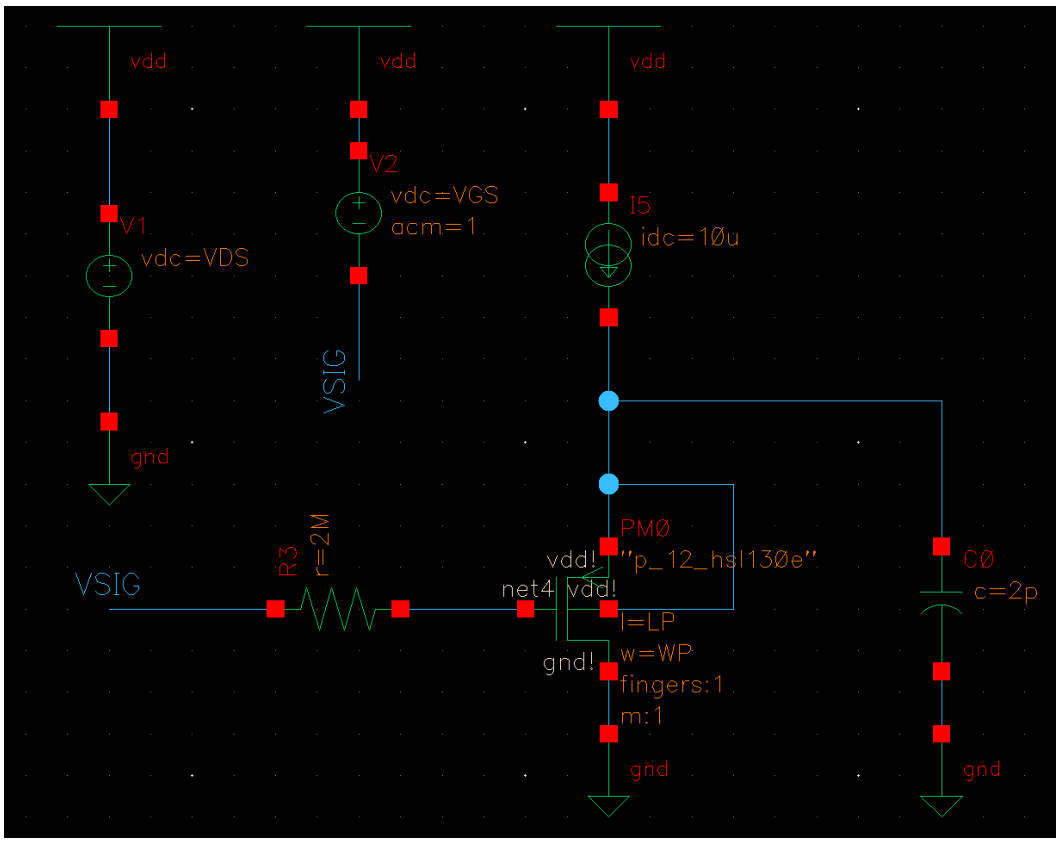

2) Simulate the OP point. Report a snapshot clearly showing the following parameters (add a filter to your monitor).

Parameter \ Transistor	PM0 (Common Drain)
ID	-10u
VGS	-423.3m
VDS	-1.623m
VTH	-256.5m
VDSAT	-161.2m
GM	102.2u
GDS	434.8u
GMB	21.4u
CDB	3.739f
CGD	2.17f
CGS	52.9f
CSB	15.14f
Region	2 = saturation

id	-10u
vgs	-423.3m
vds	-1.623
vth	-256.5m
vdsat	-161.2m
gm	102.2u
gds	434.8n
gmb	21.4u
cdb	-3.739f
cgd	-2.17f
cgs	-52.9f
csb	-15.14f
region	2

3) Check that the transistor operates in saturation.

Region 2 is saturation region (Checked).

2. AC Analysis

1) Perform AC analysis (1Hz: 10GHz, logarithmic, 20points/decade) to investigate the frequency domain peaking.
2) Report the Bode plot magnitude.

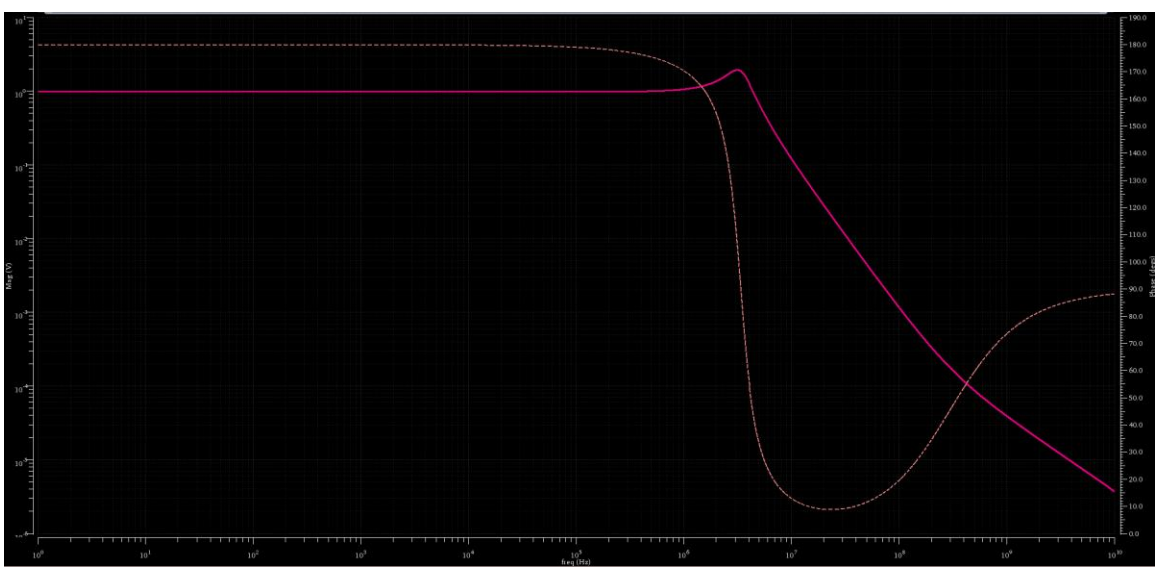

3) Do you notice frequency domain peaking?

➔ **Cadence Hint:** Use the following expression to calculate the peaking in dB: `ymax(dB20(VF("/vout")))`

There is a noticeable peaking at frequency about 3.12 MHz = 5.882 dB

4) Analytically calculate quality factor (use approximate expressions). Is the system underdamped or overdamped?

The system is **underdamped** as there is peaking in frequency domain.

Analytical quality factor:

$$Quality\ factor\ (\boldsymbol{Q}) = \frac{energy\ stored}{energy\ dissipated}$$

$$\frac{v_{out}}{v_{sig}} = A_M \frac{1+\frac{s}{\omega_z}}{(1+\frac{s}{\omega_{p1}})(1+\frac{s}{\omega_{p2}})} = A_M \frac{1+\frac{s}{\omega_z}}{1+\left(\frac{1}{\omega_{p1}}+\frac{1}{\omega_{p2}}\right)s+\left(\frac{1}{\omega_{p1}\omega_{p2}}\right)s^2} = A_M \frac{1+\frac{s}{\omega_z}}{1+\boldsymbol{b_1}s+\boldsymbol{b_2}s^2}$$

$$= A_M \frac{1+\frac{s}{\omega_z}}{1+\frac{1}{Q\omega_o}s+\frac{1}{\omega_o^2}s^2} = A_M \frac{1+\frac{s}{\omega_z}}{1+\frac{2\zeta}{\omega_o}s+\frac{1}{\omega_o^2}s^2}$$

$$Q = \frac{1}{2\zeta}\ ,\quad \zeta = \frac{1}{2Q},\qquad b_1 = \frac{1}{Q\omega_o}\ ,\qquad b_2 = \frac{1}{\omega_o^2}$$

$$\therefore \omega_o = \frac{1}{\sqrt{b_2}},\qquad \therefore b_1 = \frac{1}{Q\frac{1}{\sqrt{b_2}}}\ ,\qquad \therefore Q = \frac{\sqrt{b_2}}{b_1}$$

$$b_1 = \left(\frac{1}{\omega_{p1}}+\frac{1}{\omega_{p2}}\right),\qquad \omega_{p1} = \frac{1}{R_{in}C_{in}}\ ,\qquad \omega_{p2} = \frac{1}{R_{out}C_{out}}$$

$$b_1 = (R_{in}C_{in}+R_{out}C_{out}) = R_{sig}\big(C_{gd}+C_{gs}(1-|A_v|)\big)+R_{LFS}(C_{gs}+C_L)$$
$$= R_{sig}(C_{gd}+0)+\frac{1}{g_m}(C_{gs}+C_L) = R_{sig}C_{gd}+\frac{C_{gs}+C_L}{g_m}$$

$$b_2 = \left(\frac{1}{\omega_{p1}\omega_{p2}}\right)$$

$$b_2 = R_{in}C_{in}R_{out}C_{out} = \frac{R_{sig}}{g_m}\times(C_{gs}+C_{gd})C_L+C_{gd}C_{gs}$$

$$Q = \frac{\sqrt{b_2}}{b_1} = \frac{\sqrt{\frac{R_{sig}}{g_m} \times (C_{gs} + C_{gd})C_L + C_{gd}C_{gs}}}{R_{sig}(C_{gd}) + \frac{1}{g_m}(C_{gs} + C_L)}$$

$$= \frac{\sqrt{\frac{2M}{102.2u} \times (52.9f + 2.17f)2p + 2.17f \times 52.9f}}{2M(2.17f) + \frac{(52.9f + 2p)}{102.2u}} = 1.90059883 = 1.9$$

5) **(Optional)** Perform parametric sweep: **CL = 2p, 4p, 8p.**

- Report Bode plot magnitude overlaid on same plot.
- Report the peaking vs. CL.
- Comment.

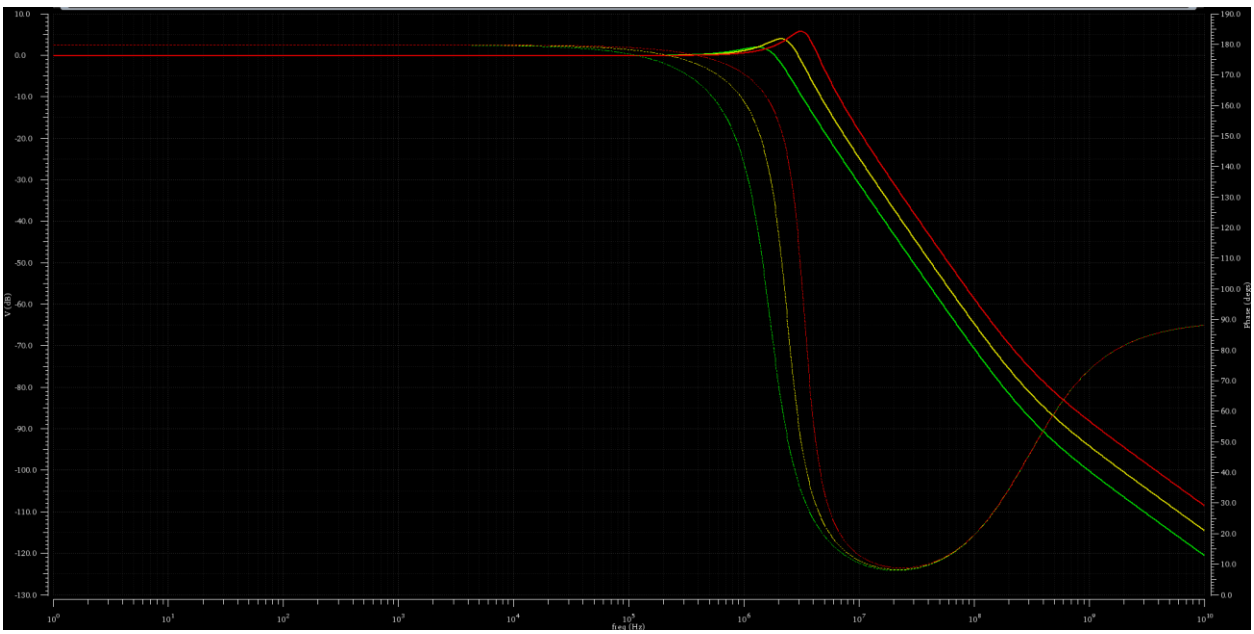

Note that [**RSIG = 2M**] is constant throughout this parametric sweep.

As CL **increases**, the peaking **decreases**. (Also the 3dB-BW decreases)

As CL **increases**, the system becomes more damped (the system is slower). Also, in other words, the complex conjugate poles get closer to the real axis.

Max Peaking (dB)	
2pF	5.882
4pF	4.055
8pF	2.015

6) **(Optional)** Perform parametric sweep: **Rsig = 20k, 200k, 2M.**

- Report Bode plot magnitude overlaid on same plot.
- Report the peaking vs. Rsig.
- Comment.

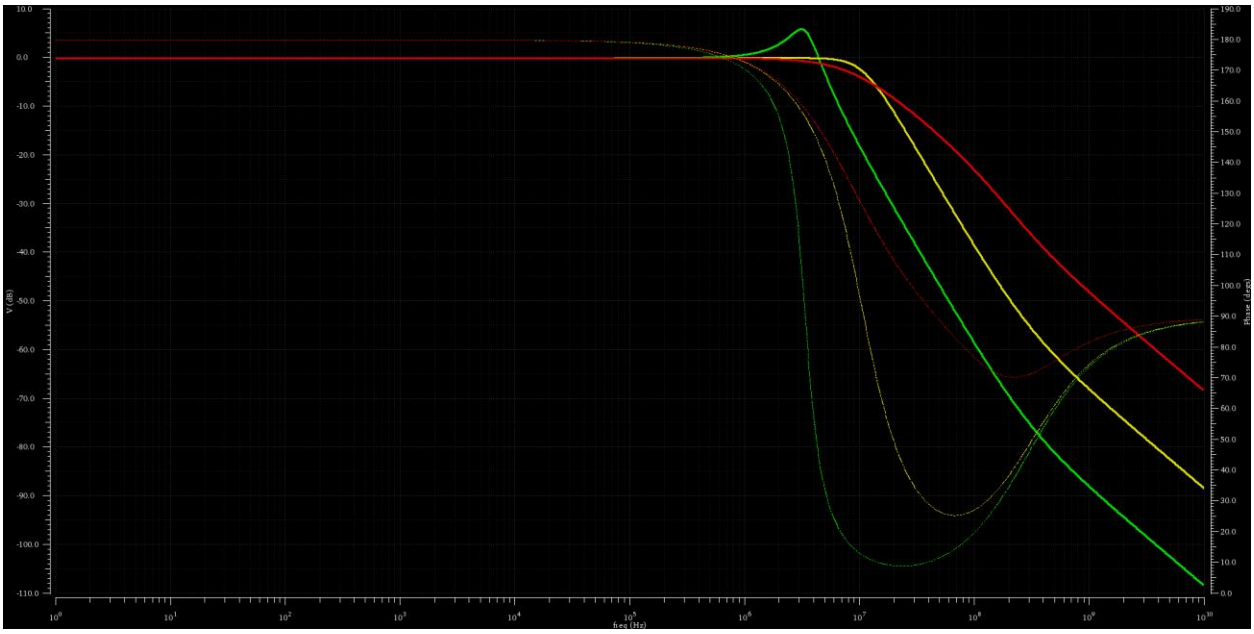

Note that [**CL = 2p**] is constant throughout this parametric sweep.

As RSIG **decreases**, the peaking **decreases**. (Also the 3dB-BW increases)

As RSIG **decreases**, the system becomes more damped (the system is slower). Also, in other words, the complex conjugate poles get closer to the real axis.

Max Peaking (dB)	
20kΩ	-36.88m
200kΩ	-19.39m
2MΩ	5.882

3. Transient Analysis

1) Use a pulse source (pulse_v_source) as your transient stimulus and set it as follows (**delay = 2us, initial = 0V, period = 8us, pulse_value = 100mV, t_fall = 1ns, t_rise = 1ns, width = 4us**). Run transient analysis (max step = 10n) for 10us to investigate the time domain ringing.

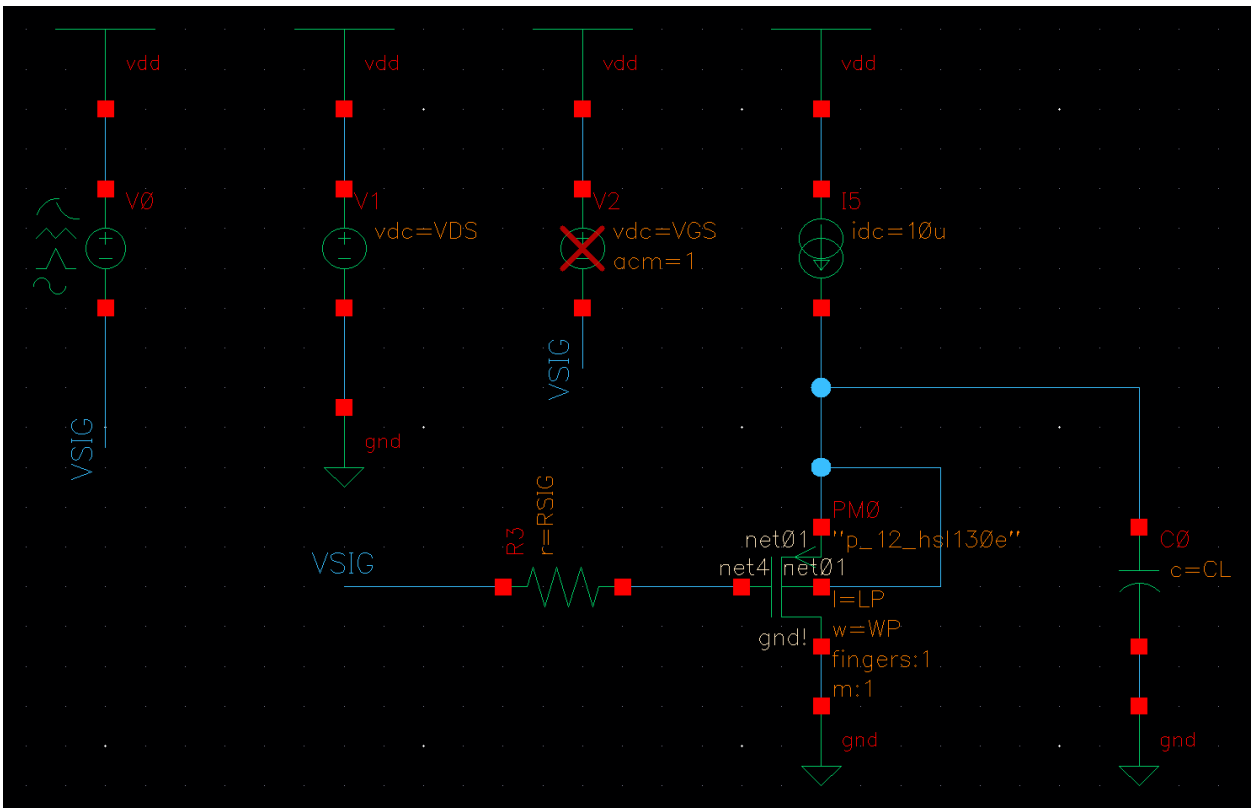

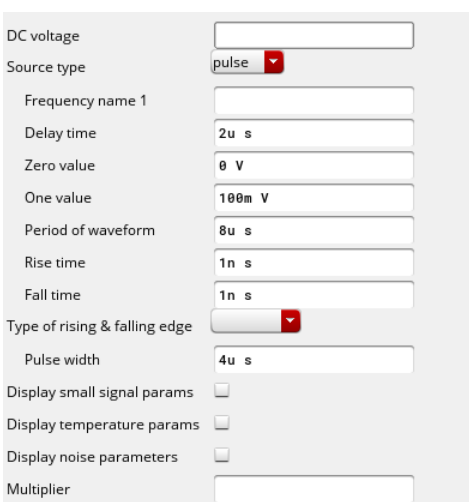

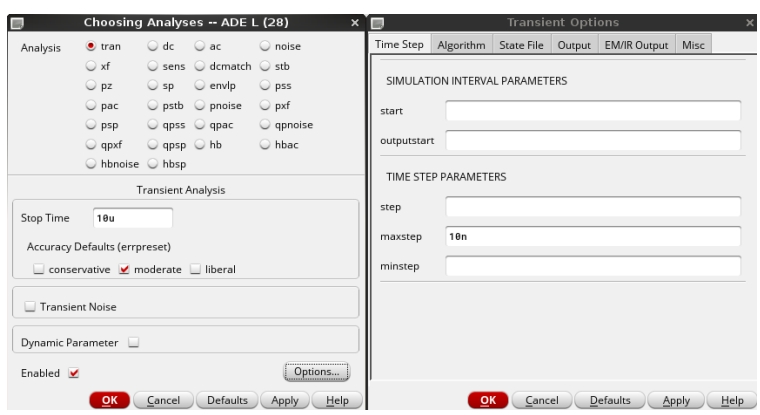

2) Report **Vin** and **Vout** overlaid vs. **time**.

Green: VSIG, Yellow: VIN, Red: VOUT

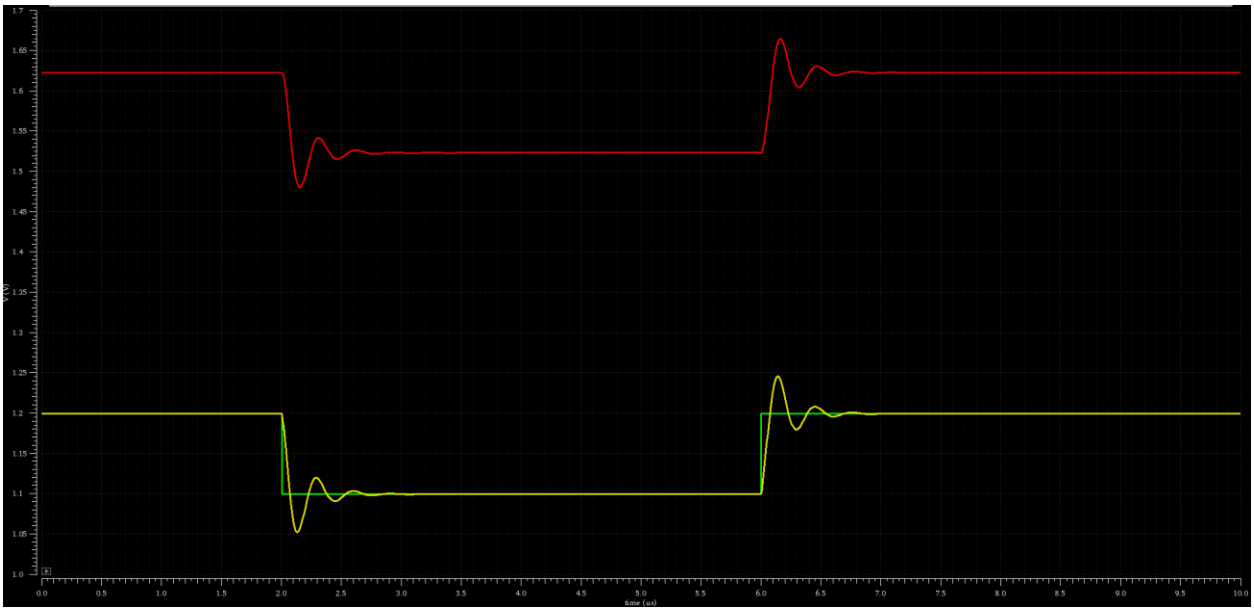

3) Calculate the DC voltage difference (DC shift) between **Vin** and **Vout**.

- What is the relation between the DC shift and **VGS**?
- How to shift the signal down instead of shifting it up?

$$1.623319V - 1.2V = 0.423319V = 423.319mV = V_{GS}$$

$$\text{DC shift} = \mathbf{V_{GS}}$$

To shift the output signal <u>down</u> instead of up by VGS, an <u>NMOS</u> is used.

4) Do you notice time domain ringing?

➔ **Cadence Hint:** Use the overshoot function to calculate the maximum overshoot as a percentage.

There is an obvious overshoot (ringing), this means this system is underdamped.

$$Q = 1.9, \qquad \zeta = \frac{1}{2Q} = \frac{1}{3.8} = 0.2632 < 0.5\ (underdamped)$$

$$Max\ Overshoot = M_p = e^{\frac{-\zeta\pi}{\sqrt{1-\zeta^2}}} \times 100 = 0.42446 \times 100 = 42.446$$

Low-to-high overshoot = overshoot(v("/net01" ?result "tran") 1.523735 nil 1.623319 nil nil "time")= 42.04
High-to-low overshoot = overshoot(v("/net01" ?result "tran") 1.623319 nil 1.523735 nil nil "time")= 43.09

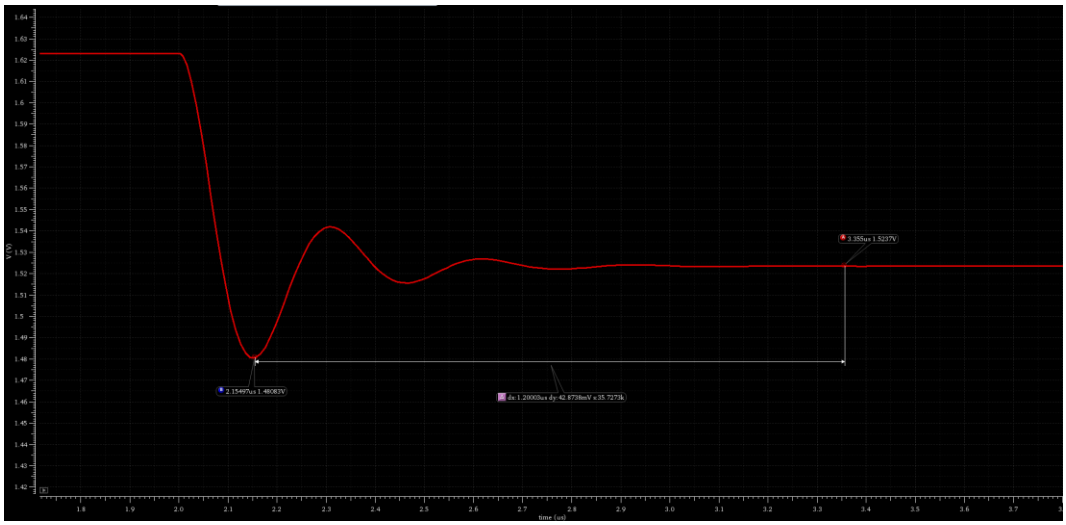

This screenshot is for high to low overshoot. It appears that the difference between the peak and the steady state settled signal = 42.87mV (which is close to both ADE calculator and theoretical values).

5) **(Optional)** Perform parametric sweep: **CL = 2p, 4p, 8p**.

- Report **Vout** vs. **time** overlaid on same plot.
- Report the **overshoot** vs. **CL**.
- Comment.

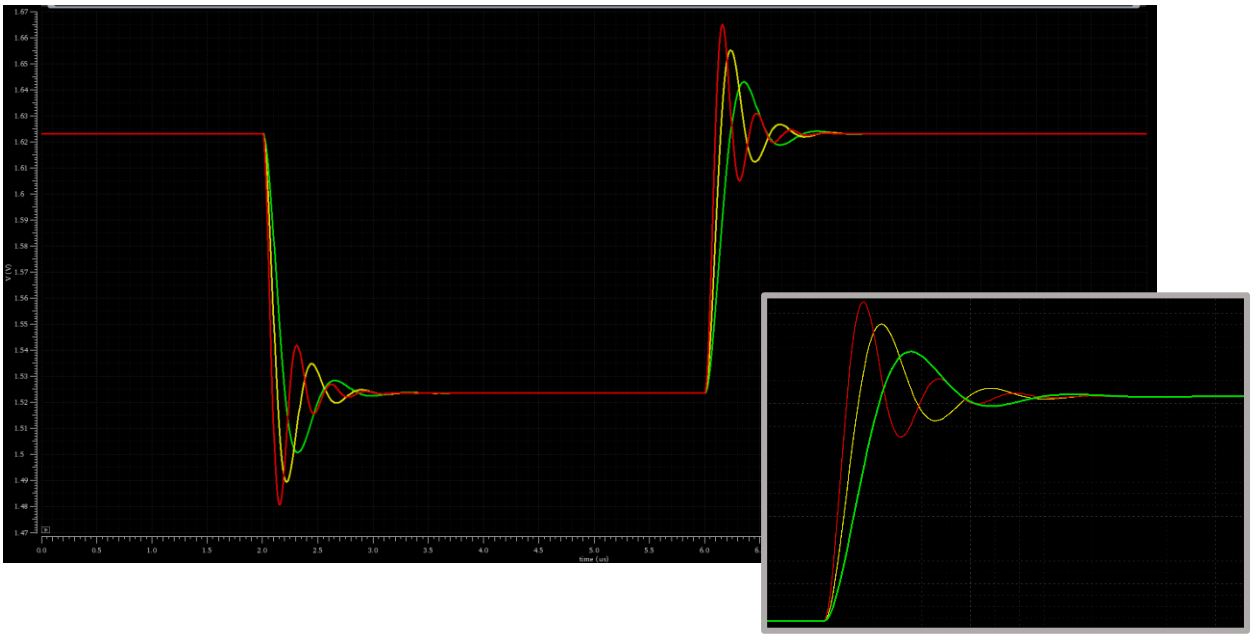

- As CL increases, the overshoot decreases. As it was said before in frequency domain, increasing CL decreases peaking and hence decreases ringing in time domain.
- The screenshot below shows Low-to-High Overshoot (RED) and High-to-Low Overshoot (YELLOW) vs. CL. Both decrease as CL increases.
- It is also noted that **Low-to-High Overshoot is less than High-to-Low Overshoot.**

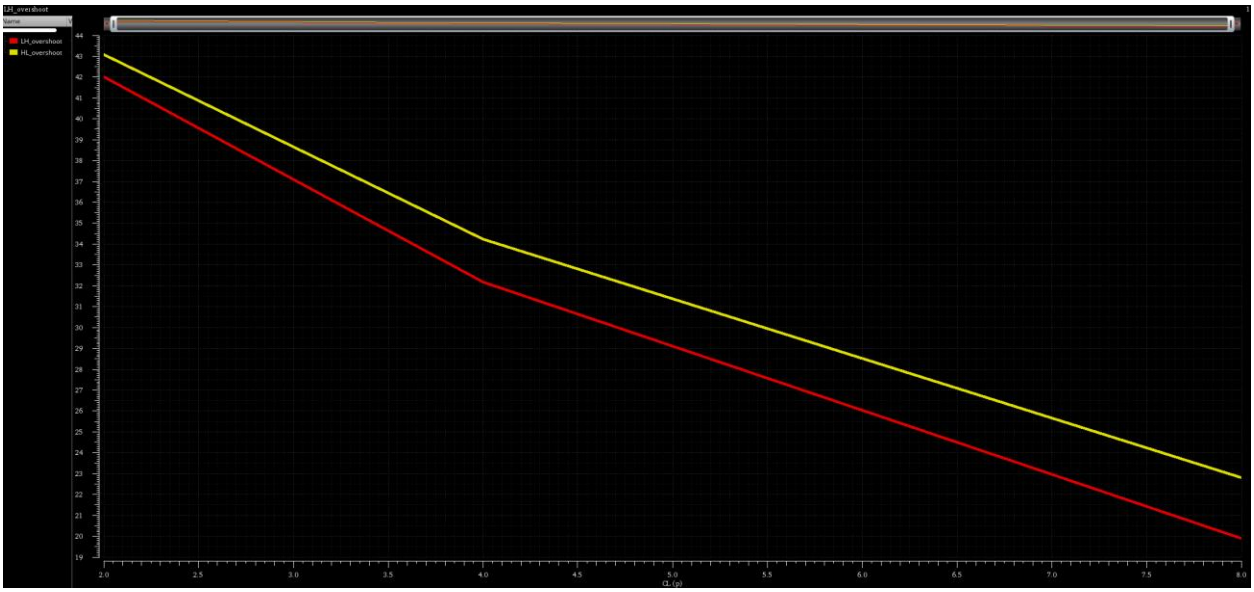

6) **(Optional)** Perform parametric sweep: **Rsig = 20k, 200k, 2M**.

- Report **Vout** vs. **time** overlaid on same plot.
- Report the **overshoot** vs. **Rsig**.
- Comment.

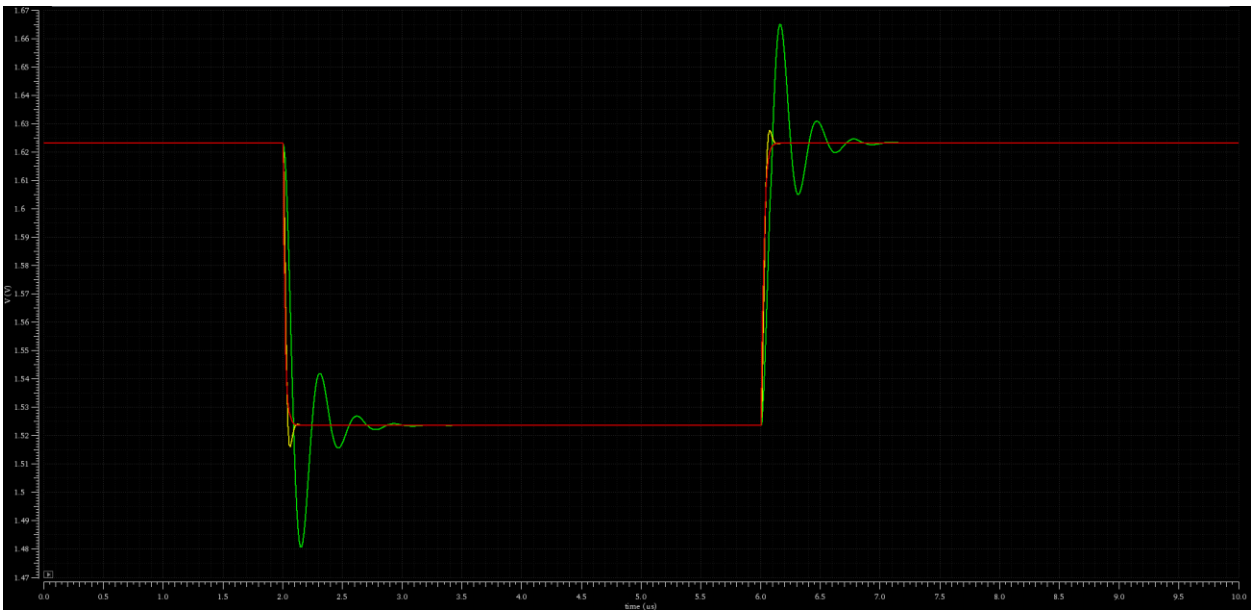

- As RSIG increases, the overshoot increases. As it was said before in frequency domain, increasing RSIG increases peaking and hence increases ringing in time domain.
- The screenshot below shows Low-to-High Overshoot (RED) and High-to-Low Overshoot (YELLOW) vs. CL. Both increase as RSIG increases.
- It is also noted that **Low-to-High Overshoot is less than High-to-Low Overshoot. (same as previous)**

4. Z_{out} (Inductive Rise) (optional)

1) We want to simulate the CD amplifier output impedance. **Replace CL with an AC current source with magnitude = 1**. Remove the AC input signal.

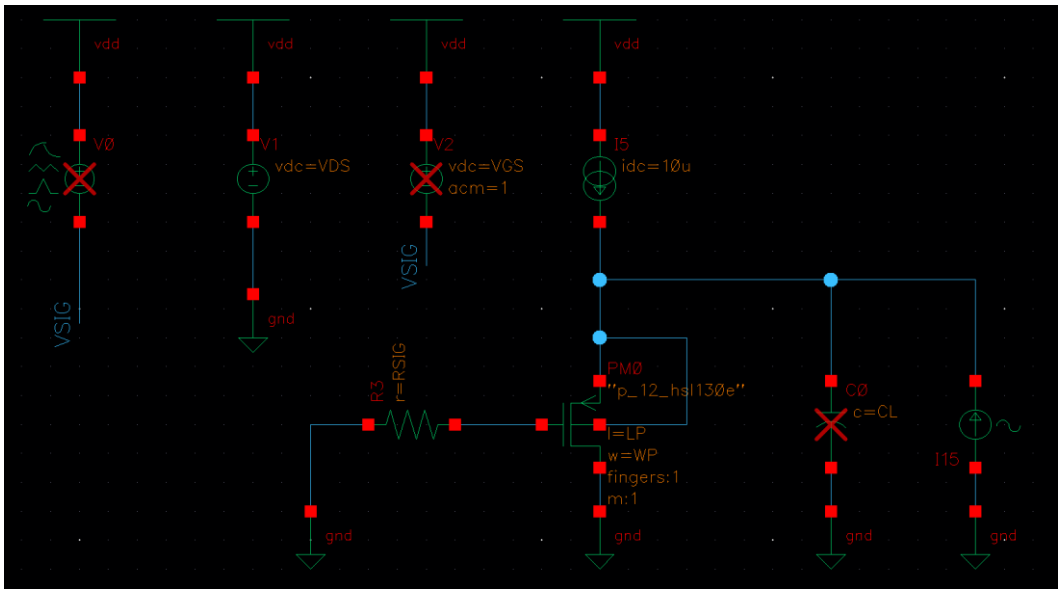

2) Perform AC analysis **(1Hz: 10GHz, logarithmic, 10points/decade)**. The voltage across the AC current source is itself the output impedance.

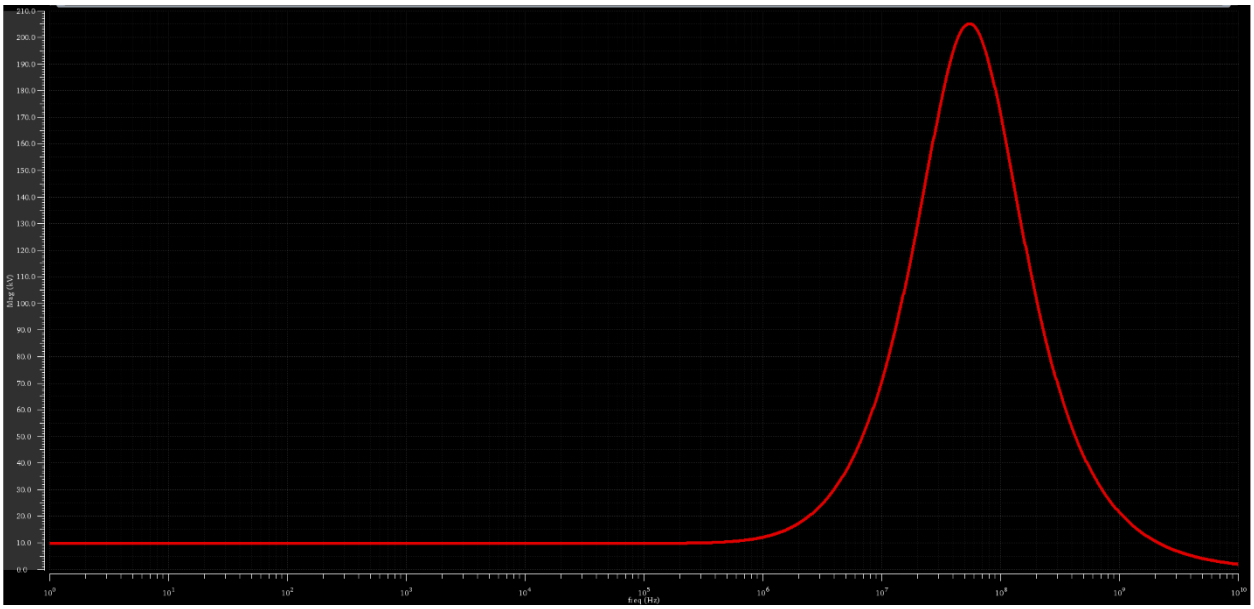

3) Plot the **output impedance** (magnitude and phase) vs. **frequency**. Do you notice an inductive rise? Why?

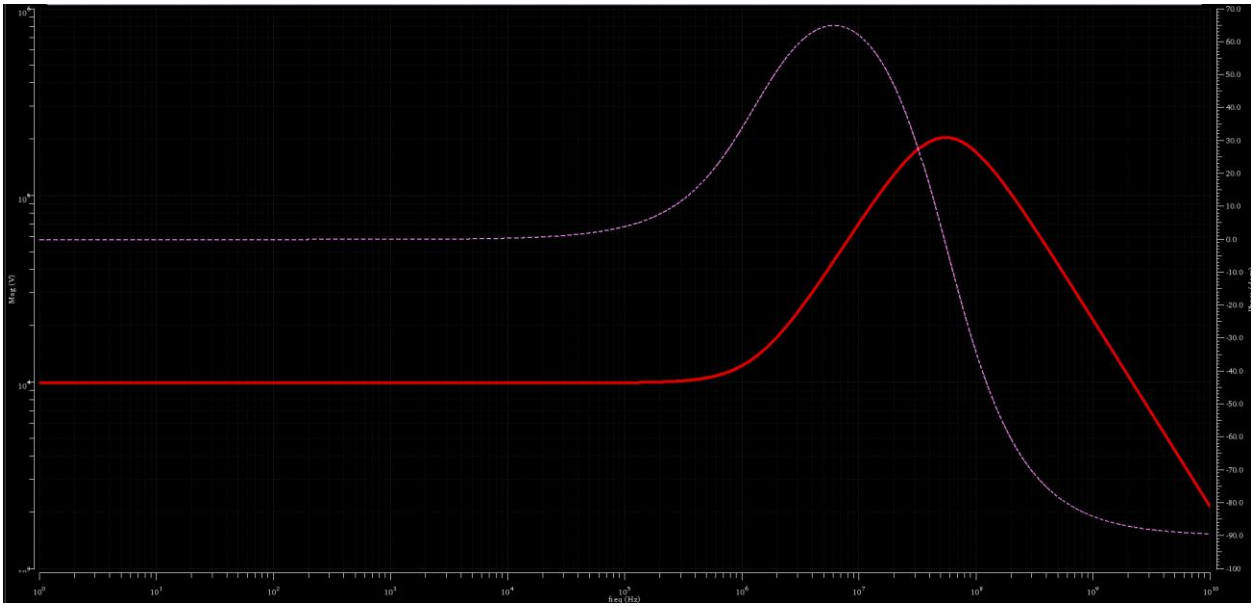

Taking the logarithmic scale for the magnitude, an inductive rise is noticed. Inductive rise happens due to the negative resistance behavior of the circuit, which with the capacitive load make an LC resonant circuit that cause the peaking and ringing.

4) Does $\boldsymbol{Z_{out}}$ fall at high frequency? Why? Hint: $\boldsymbol{C_{gd}}$ appears in parallel with $\boldsymbol{R_{sig}}$.

Yes, $\boldsymbol{Z_{out}}$ falls at high frequency. The capacitance $\boldsymbol{C_{gd}}$ shunts $\boldsymbol{R_{sig}}$ at high frequency (an extra pole), so the inductive behavior don't dominate at high frequencies.

5) Analytically calculate the zeros, poles, and magnitude at low/high frequency for $\boldsymbol{Z_{out}}$. Compare with simulation results in a table.

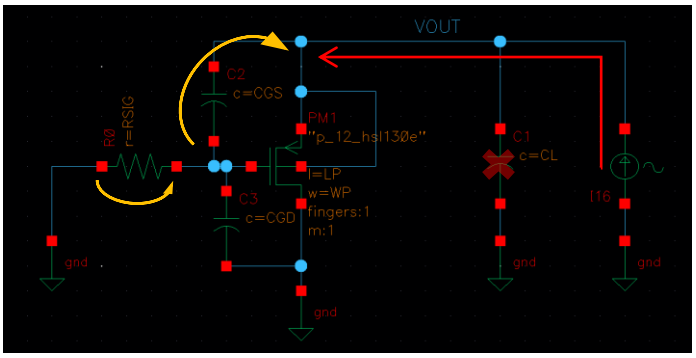

$$i_{x,f(v_{gs})} = -v_{gs}\, sC_{gs} - g_m v_{gs}$$

$$v_{x,f(v_{gs})} = -v_{gs} + \frac{-v_{gs}}{\left(\frac{1}{sC_{gs}}\right)} R_{sig}$$

$$= -v_{gs} - sv_{gs}C_{gs}R_{sig}$$

$$\boldsymbol{Z_{out}} = \frac{v_{x,f(v_{gs})}}{i_{x,f(v_{gs})}} = \frac{-v_{gs} - sv_{gs}C_{gs}R_{sig}}{-v_{gs}\, sC_{gs} - g_m v_{gs}} = \frac{1 + sC_{gs}R_{sig}}{sC_{gs} + g_m} = \frac{1}{g_m}\left(\frac{1 + sR_{sig}C_{gs}}{1 + \frac{sC_{gs}}{g_m}}\right) \equiv \frac{1 + \frac{s}{\omega_z}}{1 + \frac{s}{\omega_p}}$$

$$\frac{1}{g_m}\left(\frac{1 + sR_{sig}C_{gs}}{1 + \frac{sC_{gs}}{g_m}}\right) \equiv \frac{1}{g_m}\left(\frac{1 + \frac{s}{1/R_{sig}C_{gs}}}{1 + \frac{s}{g_m/C_{gs}}}\right) \equiv \frac{1 + \frac{s}{\omega_z}}{1 + \frac{s}{\omega_p}}$$

$$\omega_p = \frac{g_m}{C_{gs}} = \frac{1}{\frac{1}{g_m}C_{gs}} \quad , \quad \omega_z = \frac{1}{R_{sig}C_{gs}} \quad , \quad \therefore\ \omega_z < \omega_p\ (\textit{inductive rise})$$

$$|Z_{out}| = \frac{1}{g_m} \times \frac{\sqrt{1 + \left(\frac{s}{\omega_z}\right)^2}}{\sqrt{1 + \left(\frac{s}{\omega_p}\right)^2}}$$

Pole-Zero	Simulator	Theoretical
Poles	21.1796 MHz	$\omega_p = \frac{g_m}{C_{gs}} = 1.93194\ GHz$
Zeroes	1.53187 MHz	$\omega_z = \frac{1}{R_{sig}C_{gs}} = 9.4518\ MHz$
Magnitude	Simulator	Theoretical
Low frequency (s ↓↓)	$\lvert Z_{out}\rvert = 9952.28\ \Omega$	$\lvert Z_{out}\rvert = \frac{1}{g_m} = \frac{1}{102.2\text{u}} = 9784.7\ \Omega$
High frequency (s ↑↑)	$\lvert Z_{out}\rvert = 205.37k$	$\lvert Z_{out}\rvert = R_{sig} = 2M\Omega$

5. How to solve the peaking/ringing problem? (Optional)

1) Place the input/output poles away from each other (as we did when we swept **CL** and **Rsig**).

2) **(This part is optional)** A compensation network can be used to compensate for the negative input impedance and prevent overshoots. Read [Johns and Martin, 2012] Section 4.4 and try to implement the compensation network.

Lab Summary

- *In Part 1 I learned*
  - How to generate and use design charts for NMOS and PMOS transistors.
  - How to design a PMOS common-drain amplifier.
  - How the overdrive voltage of a MOS transistor deviates from the square law in different regions of operation.

- *In Part 2 I learned*
  - How to do ac, DC and transient simulations of a CD amplifier.
  - How the peaking in the frequency response of a CD amplifier changes with the load capacitor and source resistance.
  - How the ringing in the transient response of a CD amplifier changes with the load capacitor and source resistance.
  - How the output impedance of a CD amplifier shows inductive behavior.

Acknowledgements

Thanks to all who contributed to these labs. Special thanks to Dr. Sameh A. Ibrahim for reviewing and editing the labs. If you find any errors or have suggestions concerning these labs, contact Hesham.omran@eng.asu.edu.eg.

[END OF LAB 4]

Kerollos Saad Thomas