Lab 05

Simple vs. Low Compliance Cascode Current Mirror

Analog IC Design Course – Cadence Tools (Self Study)

Student Information

Name	Kerollos Saad Thomas Shokralla	كيرُلُسْ سَعْد تُومَاس شُكرَالله
Email	2501030@eng.asu.edu.eg	
Date	*February 27, 2026*	

Under Guidance and Help of My More Experienced Friends

Labs Provided by **Dr. Hesham Omran** via Master-Micro.com

Thanks to everyone who has helped me,
I pledge to help others as well.

Done during my **Post Graduate MSc. Program** in
Electronics and Electrical Communication Engineering
at the **Faculty of Engineering – Ain Shams University**

Lab 05: Simple vs. Low Compliance Cascode Current Mirror

Intended Learning Objectives:[1]

In this lab[2] you will:

- Design and simulate low-voltage and simple current mirrors.
- Compare low-voltage and simple current mirrors.
- Learn how to use hierarchical design.

Part 1: Sizing Chart

1) We can show that $g_m = \frac{2I_D}{V_{ov}}$, which is based on the square-law. For a real MOSFET, if we compute V_{ov} and $\frac{2I_D}{g_m}$ they will not be equal. Let's define a new parameter called V-star (V^*) which is calculated from actual simulation data using the formula $V^* = \frac{2I_D}{g_m} \leftrightarrow g_m = \frac{2I_D}{V^*}$

For a square-law device, $V^* = V_{ov}$, However, for a real MOSFET they are not equal. An often used sweet-spot that provides good compromise between different trade-offs is $V^* = 200\ mV$.

2) We want to design current mirrors with the parameters below.

Parameter	0.13um CMOS	0.18um CMOS
L	$1\ \mu m$	$1\ \mu m$
V^*	**125 mV**	**200 mV**
Supply	$1.2\ V$	$1.8\ V$
Current consumption	$20\ \mu A$	$20\ \mu A$

$$Put\ L = 1\ \mu m$$

Again, I decided – in this lab – to use the **umc13mmrf** PDK (Process Design Kit), which is a 130nm process technology, instead of the **ee214b.sp** file. The reason is a matter of preference.

3) The remaining variable in the design is to calculate W. Since the square-law is not accurate, we cannot use it to determine the sizing. Instead, we will use a sizing chart generated from simulation.

Create a test-bench for PMOS transistor as shown below (we will use both NMOS and PMOS in this lab). Use $W = 10\ \mu m$ (we will understand why shortly).

4) Sweep **VGS** from $0\ to\ \approx V_{TH} + 0.4V$ with 10mV step. Set $V_{DS} = V_{DD}/2$.

$$V_{TH} + 0.4V \approx 0.87\ V\ [let\ it\ be\ 1V], \qquad V_{DD} = 1.2\ V, \qquad V_{DS} = 0.6\ V$$

[1] *COLOR CODES:* Orange (steps) -- Blue (output) -- Green (comments / observations) – White (equations).

[2] **Cadence Virtuoso** software on a Linux® Debian 8 Virtual Machine is used.

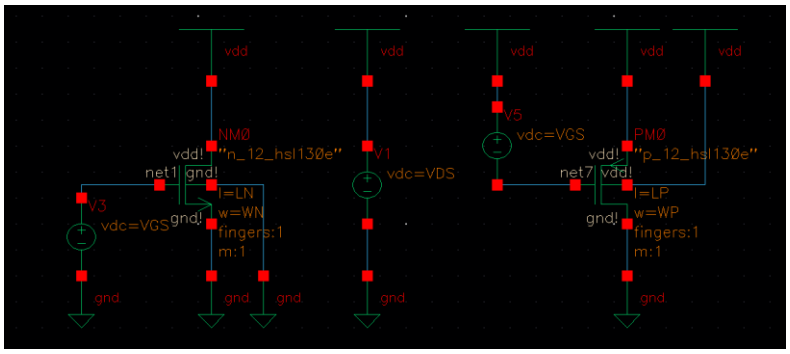

5) We want to compare $V^* = 2I_D/g_m$ and $V_{ov} = V_{GS} - V_{TH}$ by plotting them overlaid. Use the calculator to create expressions for V^* and V_{ov}. You can save the expressions to reuse them later.

The Blue Curve is $V_{ov} = V_{GS} - V_{TH}$

```
(v("NM0:vgs" ?result "dc") - v("NM0:vth" ?result "dc"))
```

The Green Curve is $V^* = 2I_D/g_m$

```
(2 / (getData("NM0:gm" ?result "dc") / getData("NM0:id" ?result "dc")))
```

The difference is that V^* takes a lot of factors into consideration, unlike the simple V_{ov} from square law.

6) Plot V^* and V_{ov} overlaid vs. V_{GS}. Make sure the y-axis of both curves has the same range. You will notice that at the beginning of the strong inversion region, V^* and V_{ov} are relatively close to each other (i.e., square-law is relatively valid). For deep strong inversion (large V_{ov}: velocity saturation and mobility degradation) or weak inversion (near-threshold and sub-threshold operation) the behavior is quite far from the square-law.

The y-axes ranges are (-300mV to 1.1V) and x-axis is (0 to 1V). For NMOS.
The y-axes ranges are (-900mV to 0.3V) and x-axis is (0 to 1V). For PMOS

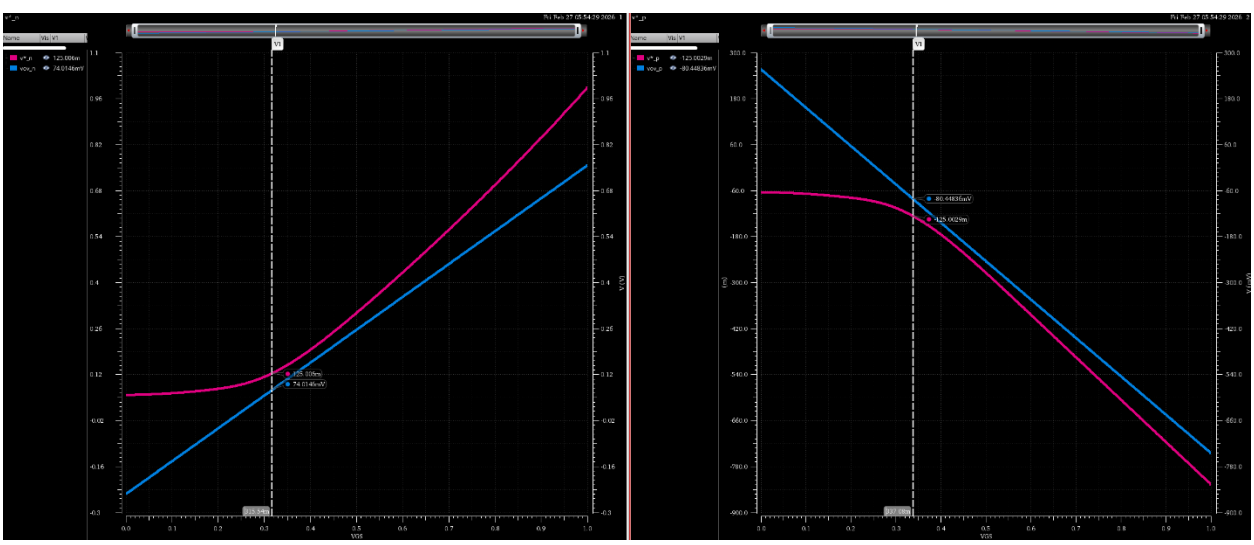

7) An often used sweet-spot that provides good compromise between different trade-offs is $\boldsymbol{V^*} = 200\ mV$. On the $\boldsymbol{V^*}$ and $\boldsymbol{V_{ov}}$ chart locate the point at which $\boldsymbol{V^*} = 125\ mV$. Find the corresponding $\boldsymbol{V_{ovQ}}$ and $\boldsymbol{V_{GSQ}}$.

We chose $\boldsymbol{V^*} = 125\ mV$ instead of $\boldsymbol{V^*} = 200\ mV$ as per given in specs.

NMOS	PMOS
$\boldsymbol{V^* = V_Q^* = 125\ mV}$ $\boldsymbol{V_{ov} = V_{ov_Q} = 74.0146\ mV}$ It is noted that $\boldsymbol{V_{GS} = V_{GS_Q} = 315.54\ mV}$	$\boldsymbol{V^* = V_Q^* = -125\ mV}$ $\boldsymbol{V_{ov} = V_{ov_Q} = -80.44836\ mV}$ It is noted that $\boldsymbol{V_{GS} = V_{GS_Q} = 337.08\ mV}$

8) Plot I_D, g_m, *and* g_{ds} vs. V_{GS}. Find their values at V_{GS_Q}. Let's name these values I_{DX}, g_{mX}, *and* g_{dsX}.

NMOS	PMOS
$\boldsymbol{I_{DX} = 25.96\ \mu A}$	$\boldsymbol{I_{DX} = 4.635\ \mu A}$
$\boldsymbol{g_{mX} = 415.4\ \mu S}$	$\boldsymbol{g_{mX} = 74.16\ \mu S}$
$\boldsymbol{g_{dsX} = 3.854\ \mu S}$	$\boldsymbol{g_{dsX} = 201.8\ nS}$
$\boldsymbol{r_o = 259.5\ k\Omega}$	$\boldsymbol{r_o = 4.956\ M\Omega}$

v("NM0:vgs" ?result "dcOp")	315.5m
v("NM0:vth" ?result "dcOp")	241.5m
getData("NM0:gmoverid" ?re...	16
getData("NM0:id" ?result "dc...	25.96u
getData("NM0:gm" ?result "d...	415.4u
getData("NM0:gds" ?result "...	3.854u
ro_n	259.5k

v("PM0:vgs" ?result "dcOp")	-337.1m
v("PM0:vth" ?result "dcOp")	-256.6m
getData("PM0:gmoverid" ?re...	16
getData("PM0:id" ?result "dc...	-4.635u
getData("PM0:gm" ?result "d...	74.16u
getData("PM0:gds" ?result "d...	201.8n
ro_p	4.956M

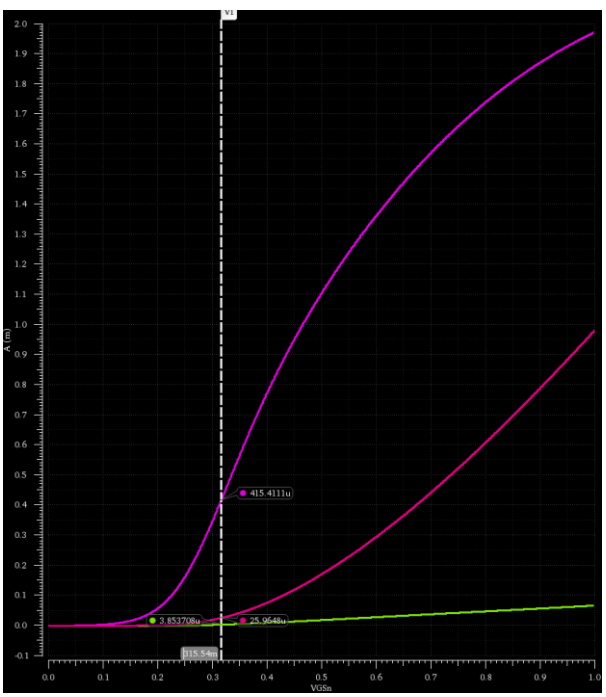

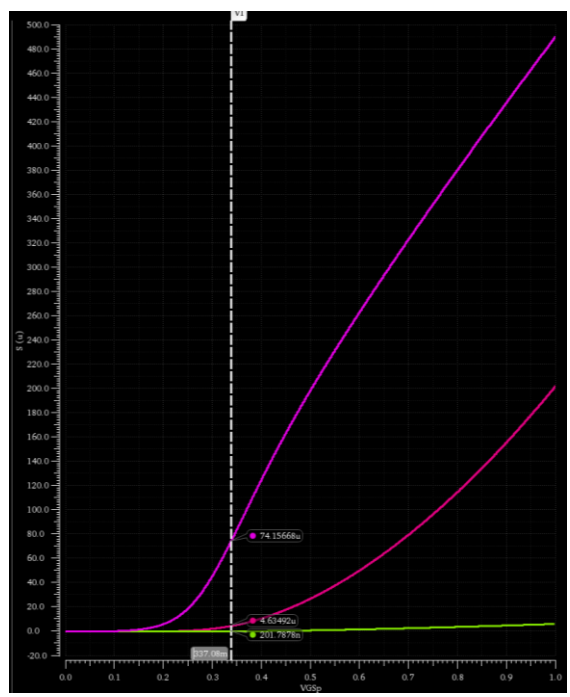

9) Now back to the assumption that we made that $\boldsymbol{W}$ = 10$\boldsymbol{\mu m}$. This is not the actual value that we will use for our design. But the good news is that $\boldsymbol{I_D}$ is always proportional to $\boldsymbol{W}$ irrespective of the operating region and the model of the MOSFET (regardless square-law is valid or no). Thus, we can use ratio and proportion (cross-multiplication) to determine the correct width at which the current will be $\boldsymbol{I_{DQ}} = \boldsymbol{20\mu A}$ as given in the specs. Calculate $\boldsymbol{W}$ as shown below.

Wn	$\boldsymbol{I_D}$
10 µm	I_{DX} @ V_Q^* (from the chart)
?	$I_{DQ} = 20\ \mu A$ (from the specs)

$$W = \frac{10\ \mu m \times 20\ \mu A}{I_{DX}\ @\ V_Q^*\ \text{(from the chart)}}$$

$$W_{nmos} = \frac{10\ \mu m \times 20\ \mu A}{\mathbf{25.96\ \mu A}} = 7.70416\ \mu m \approx \mathbf{8\ \mu m}$$

$$W_{pmos} = \frac{10\ \mu m \times 20\ \mu A}{\mathbf{4.635\ \mu A}} = 43.14994\ \mu m \approx \mathbf{44\ \mu m}$$

10) Now we are almost done with the design of the amplifier. Note that $\boldsymbol{g_m}$ is also proportional to $\boldsymbol{W}$ as long as $\boldsymbol{V_{ov}}$ is constant. On the other hand, $\boldsymbol{r_o} = \boldsymbol{1/g_{ds}}$ is inversely proportional to $\boldsymbol{W}$ $(\boldsymbol{I_D})$ as long as L is constant. Before leaving this part, calculate $\boldsymbol{g_{mQ}}$ and $\boldsymbol{g_{dsQ}}$ using ratio and proportion (cross multiplication).

NMOS

$\boldsymbol{g_{mQ}}$	W @ constant $\boldsymbol{V_{ov}}$
$\mathbf{415.4\ \mu S}$	$10\ \mu m$
?	$8\ \mu m$

$\boldsymbol{g_{dsQ}}$	W $(\boldsymbol{I_D})$
$\mathbf{3.854\ \mu S}$	$10\ \mu m$
?	$8\ \mu m$

$$\boldsymbol{g_{mQ}} = \frac{\mathbf{415.4\ \mu S} \times 8\ \mu m}{10\ \mu m} = 332.32\ \mu S$$

$$\boldsymbol{g_{dsQ}} = \frac{\mathbf{3.854\ \mu S} \times 8\ \mu m}{10\ \mu m} = 3.0832\ \mu S$$

$$r_o = \frac{1}{3.0832\ \mu S} \approx 324.33835\ k\Omega$$

<u>Note:</u> $g_m = \mathbf{415.4\ \mu S} \rightarrow g_m = \mathbf{332.32\ \mu S}$
Directly proportional to W (decreased)

$r_o = \mathbf{259.5\ k\Omega} \rightarrow r_o \approx \mathbf{324.33835\ k\Omega}$
Inversely proportional to W (increased)

PMOS

g_{mQ}	W @ constant V_{ov}
$\mathbf{74.16\ \mu S}$	$10\ \mu m$
?	$44\ \mu m$

g_{dsQ}	W (I_D)
$\mathbf{201.8\ nS}$	$10\ \mu m$
?	$44\ \mu m$

$$g_{mQ} = \frac{\mathbf{74.16\ \mu S} \times 44\ \mu m}{10\ \mu m} = 326.304\ \mu S$$

$$g_{dsQ} = \frac{\mathbf{201.8\ nS} \times 44\ \mu m}{10\ \mu m} = 887.92\ nS$$

$$r_o = \frac{1}{887.92\ nS} \approx 1.126228\ M\Omega$$

<u>Note:</u> $g_m = \mathbf{74.16\ \mu S} \rightarrow g_m = \mathbf{326.304\ \mu S}$
Directly proportional to W (increased)

$r_o = \mathbf{4.956\ M\Omega} \rightarrow r_o \approx \mathbf{1.126228\ M\Omega}$
Inversely proportional to W (decreased)

REVIEW ON OUR **FINAL** PARAMETERS:	
NMOS	PMOS
$\therefore L = 1\ \mu m, W = 8\ \mu m, V_{DD} = 1.2\ V,$ $\mathbf{V^* = V_Q^* = 125\ mV}$ $\mathbf{V_{ov} = V_{ov_Q} = 74.0146\ mV}$ $\mathbf{V_{GS} = V_{GS_Q} = 315.54\ mV}$ $\therefore g_m = 332.32\ \mu S, \quad g_{ds} = 3.0832\ \mu S,$ $r_o = 324.33835\ k\Omega$	$\therefore L = 1\ \mu m, W = 44\ \mu m, V_{DD} = 1.2\ V,$ $\mathbf{V^* = V_Q^* = -125\ mV}$ $\mathbf{V_{ov} = V_{ov_Q} = -80.44836\ mV}$ $\mathbf{V_{GS} = V_{GS_Q} = 337.08\ mV}$ $\therefore g_m = 326.304\ \mu S, \quad g_{ds} = 887.92\ nS,$ $r_o = 1.126228\ M\Omega$
Simulator Results: v("NM0:vgs" ?result "dcOp") 315.5m v("NM0:vth" ?result "dcOp") 242.2m getData("NM0:gmoverid" ?re... 16.05 getData("NM0:id" ?result "dc... 20.52u getData("NM0:gm" ?result "d... 329.4u getData("NM0:gds" ?result "... 3.045u ro_n 328.4k	Simulator Results: v("PM0:vgs" ?result "dcOp") -337.1m v("PM0:vth" ?result "dcOp") -256.8m getData("PM0:gmoverid" ?re... 16.01 getData("PM0:id" ?result "dc... -20.46u getData("PM0:gm" ?result "d... 327.6u getData("PM0:gds" ?result "d... 890.1n ro_p 1.123M

END OF SIZING AND DESIGN

Part 2: Current Mirror

1) Create a new schematic and name it "lab_05_ws_cm". Construct the low compliance current mirror circuit shown below.

2) Construct the circuit shown below. Add labels (**IBIN, IBOUT, AGND, AVDD**) to nets (wires) using the hotkey "l", then create ports using the hotkey "p" or using the toolbar.

➔ **Cadence Hint:** For W and L we use **pPar("VariableName")**, which passes the variable to the upper level of hierarchy. The variables will appear when you instantiate the cell as explained below.

3) For the wide-swing bias transistor (the magic battery) note that we use longer length ($6 * \boldsymbol{L}$) as shown below.

lab_05_ws_cm:

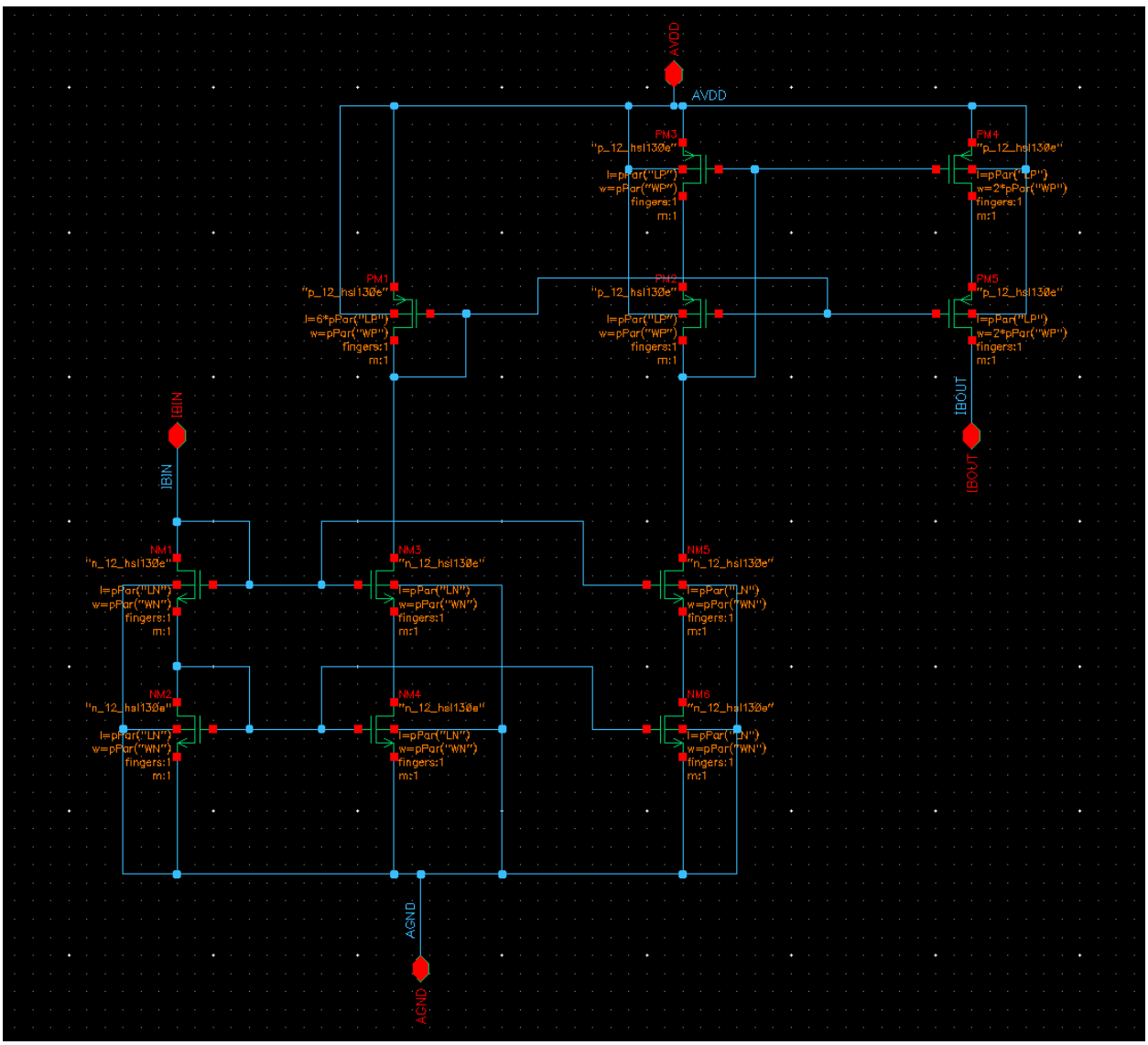

4) The current mirror takes input current **IBIN** and generates output current **IBOUT = 2*IBIN** (note the sizing of transistors in **IBOUT** branch).

In **IBOUT** branch, the two PMOS transistors have double the width.

5) Create a symbol for the **CM** (From the menu bar: **Add -> Generate Symbol**)

This piece of instruction is obviously for mentor graphics tools (now Siemens EDA). For Cadence, from the menu bar: **Create -> Cell View -> From Cell View.**

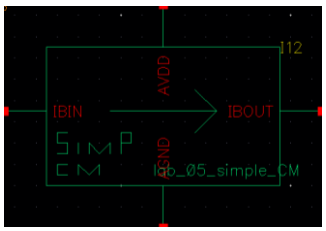

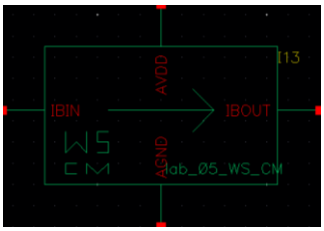

6) Create a test-bench in a higher level of hierarchy as shown below to test the current mirror.

We will test **lab_05_ws_cm** together with **lab_05_simple_cm.**

7) In the library manager copy the "**lab_05_ws_cm**" cell and name the new cell "**lab_05_simple_cm**".

Edit the new cell to design another simple current mirror using two PMOS transistors only as shown below. Create a symbol for the simple current mirror. We will **compare this simple mirror with the wide swing cascode** you have just designed.

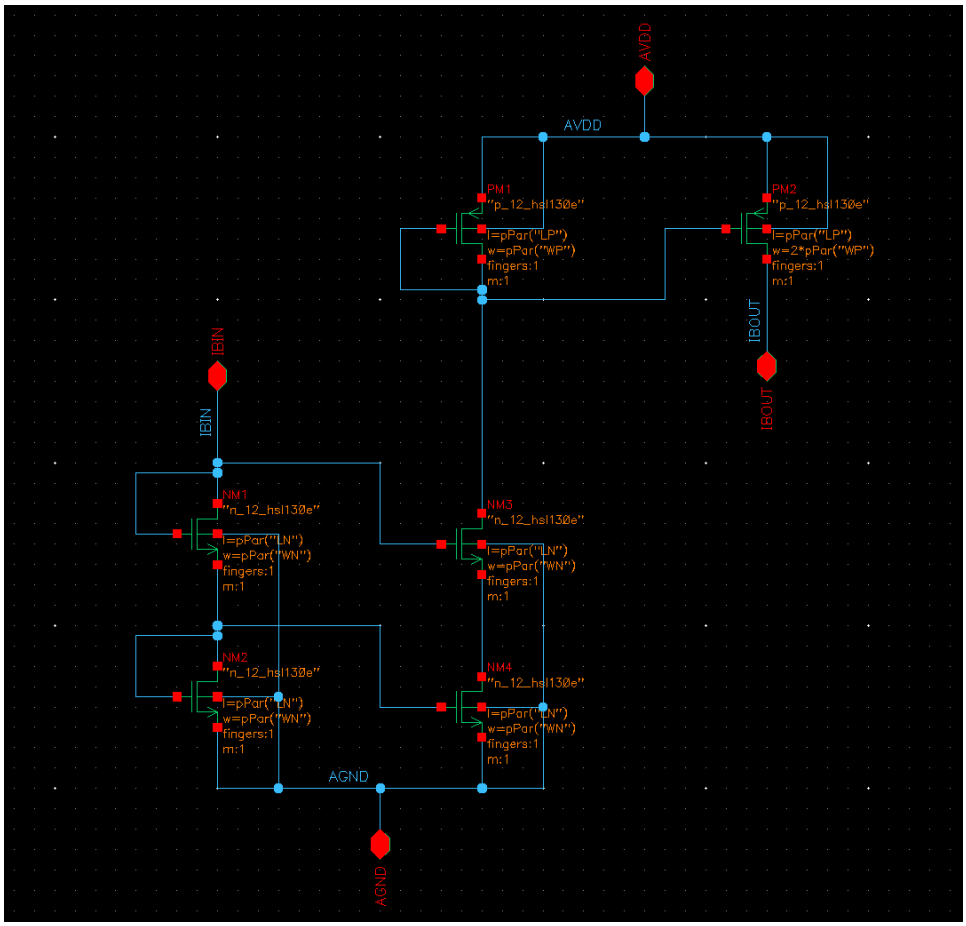

8) Create a new cell for the test-bench schematic "lab_05_cm_tb" to test the two current mirrors.
9) When you instantiate the cells, you can set the **pPar parameters** as shown below.

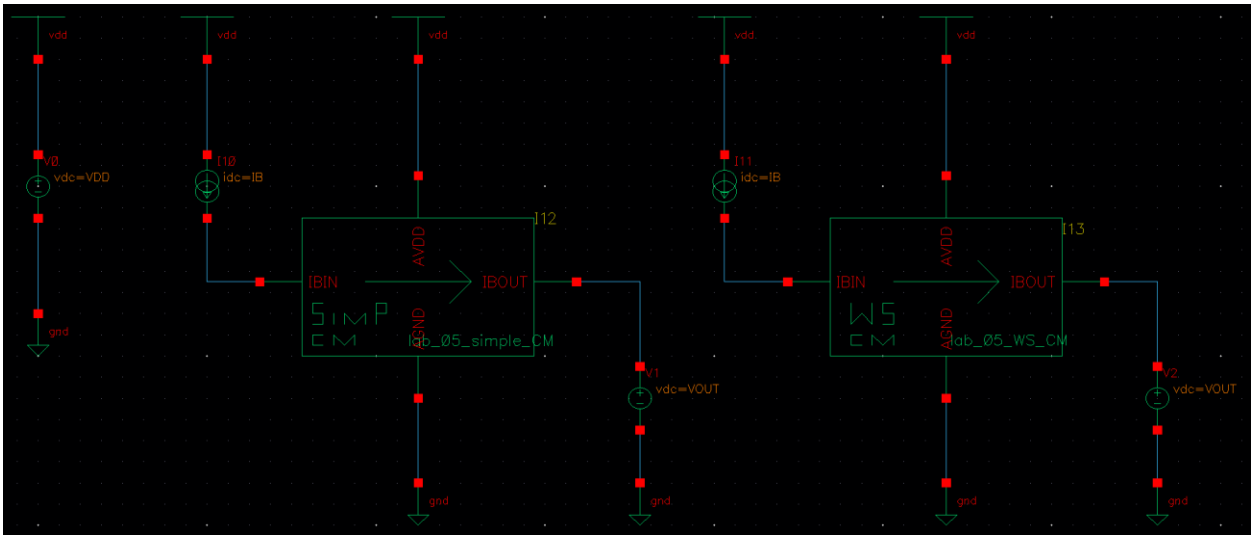

Passing other variables to the pPar parameters is normal.
Next step, we make the test bench and fill the variables.

10) Use **IB = 20uA** and set the sizing as in Part 1.

REVIEW ON OUR **FINAL** sizing from **Part 1**:	
NMOS	PMOS
$\therefore L = 1\ \mu m, \quad W = 8\ \mu m,$ $I_B = 20\ \mu A, \quad V_{DD} = 1.2V$	$\therefore L = 1\ \mu m, \quad W = 44\ \mu m,$ $I_B = 20\ \mu A, \quad V_{DD} = 1.2V$

Report the following:

1) Schematic of the two CMs with DC node voltages clearly annotated at **VOUT = VDD/2** (double click the symbol to go to lower level of hierarchy and show the schematic).

$$Put\ V_{out} = \frac{V_{DD}}{2} = 0.6\ V$$

2) Snapshots showing the following parameters for all transistors at **VOUT = VDD/2**. You may **summarize the results in a table**.

CM_SMPL:

Transistor / Parameter	NM1	NM2	NM3	NM4	PM1	PM2
ID	20u	20u	20.01u	20.01u	-20.01u	-40.55u
VGS	361.2m	322.7m	359.5m	322.7m	322.7m	-338.1m
VDS	361.2m	322.7m	537.4m	324.5m	-338.1m	-600m
VTH	282m	242.2m	282.2m	242.2m	-256.8m	-256.8m
VDSAT	115.2m	112.5m	113.8m	112.5m	-100.6m	-100.6m
GM	314.1u	312.9u	316.7u	313u	318.8u	646.3u
GDS	3.648u	3.791u	3.331u	3.782u	1.126u	1.854u
GMB	34.21u	41.95u	34.45u	41.96u	65.83u	133.6u
Region	2	2	2	2	2	2

CM_WS:

Trns / Prm	NM1	NM2	NM3	NM4	NM5	NM6	PM1	PM2	PM3	PM4	PM5
ID	20u	20u	20u	20u	20.01u	20.01u	-20u	-20.01u	-20.01u	-40.06u	-40.06u
VGS	361.2m	322.7m	361.1m	322.7m	359.5m	322.7m	-500.9m	-365.7m	-340.3m	-340.3m	-364.8m
VDS	361.2m	322.7m	376.2m	322.9m	535.3m	324.4m	-500.9m	-205.1m	-135.2m	-136.1m	-463.9m
VTH	282m	242.2m	282.1m	242.2m	282.2m	242.2m	-250.2m	-283.7m	-256.8m	-256.8m	-283.8m
VDSAT	115.2m	112.5m	115m	112.5m	113.8m	112.5m	-216.7m	-103.3m	-102m	-102m	-102.6m
GM	314.1u	312.9u	314.3u	312.9u	316.7u	313u	142.1u	315.8u	308u	617.1u	637.9u
GDS	637.9u	3.791u	3.596u	3.79u	3.333u	3.782u	256n	2.883u	14.98u	29.18u	1.868u
GMB	34.21u	41.95u	34.24u	41.95u	34.45u	41.96u	29.95u	60.57u	63.76u	127.8u	122.4u
Region	2	2	2	2	2	2	2	2	2	2	2

3) Check that all transistors have $\boldsymbol{VGS}$, $\boldsymbol{gm}$ and $\boldsymbol{gds}$ as designed in **Part 1**.

NMOS (Part 1)	PMOS (Part 1)
$\boldsymbol{V_{GS} = V_{GS_Q} = 315.54\ mV}$ $\therefore g_m = 332.32\ \mu S, \quad g_{ds} = 3.0832\ \mu S,$	$\boldsymbol{V_{GS} = V_{GS_Q} = 337.08\ mV}$ $\therefore g_m = 326.304\ \mu S, \quad g_{ds} = 887.92\ nS,$
Simulator Results: v("NM0:vgs" ?result "dcOp") 315.5m v("NM0:vth" ?result "dcOp") 242.2m getData("NM0:gmoverid" ?re... 16.05 getData("NM0:id" ?result "dc... 20.52u getData("NM0:gm" ?result "d... 329.4u getData("NM0:gds" ?result "... 3.045u ro_n 328.4k	Simulator Results: v("PM0:vgs" ?result "dcOp") -337.1m v("PM0:vth" ?result "dcOp") -256.8m getData("PM0:gmoverid" ?re... 16.01 getData("PM0:id" ?result "dc... -20.46u getData("PM0:gm" ?result "d... 327.6u getData("PM0:gds" ?result "d... 890.1n ro_p 1.123M

4) Are all transistors operating in **saturation**? (Region = 2)

Yes, all transistors are operating in **saturation** (Region = 2).

5) Perform **DC sweep** (not parametric sweep) using **VOUT = 0: 10m: VDD**. Report **IBOUT vs. VOUT** for the two CMs overlaid in the same plot.

- Comment on the difference between the two circuits.
- IBOUT of the simple CM is exactly equal to IBIN*2 at a specific value of VOUT. Why?

RED: CM_SMPL, YELLOW: CM_WS

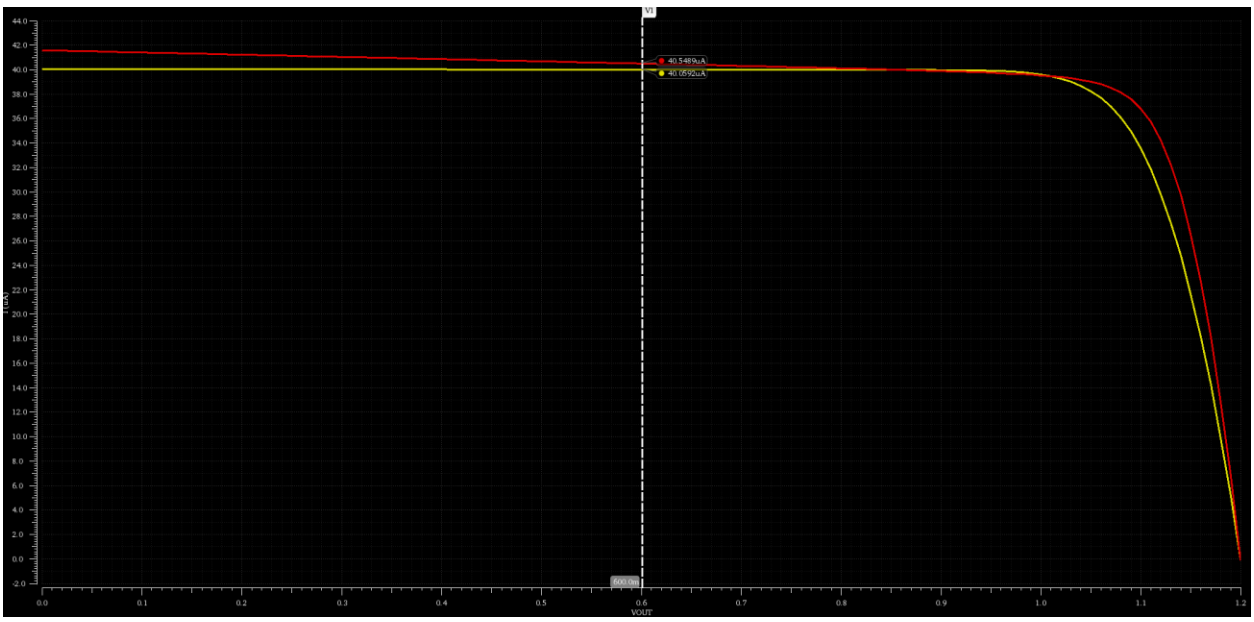

The **Wide swing current mirror** provides a more constant current. This is due to having higher Rout.

IBOUT of the simple current mirror is equal to IBIN*2 = 40uA at VOUT=876.4532m exactly.

This is because it is affected by Channel Length Modulation (CLM), therefore it has a slope and it intersects with the 40uA at a single point.

Both simple CM and Wide Swing CM give the same current at this point of Vout = 862.1545m

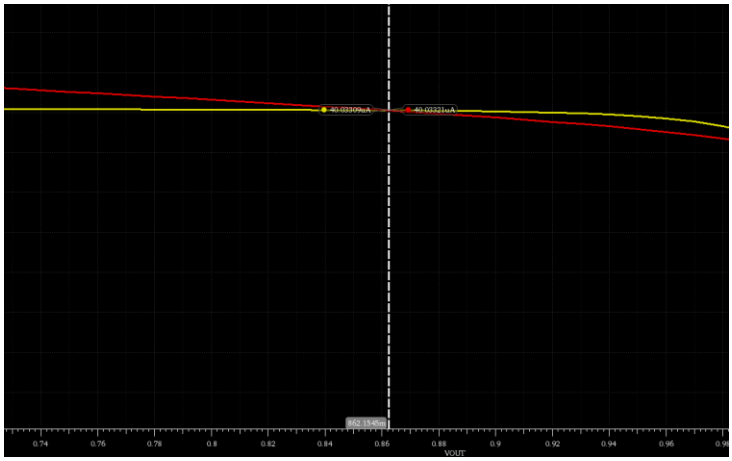

6) Percent of error in **IBOUT vs. VOUT** (ideal IBOUT should be IBIN*2) for the two CMs in the current mirror operating region **(VOUT = 0 to VDD – *V**)** overlaid in the same plot.

- Comment on the difference between the two circuits.

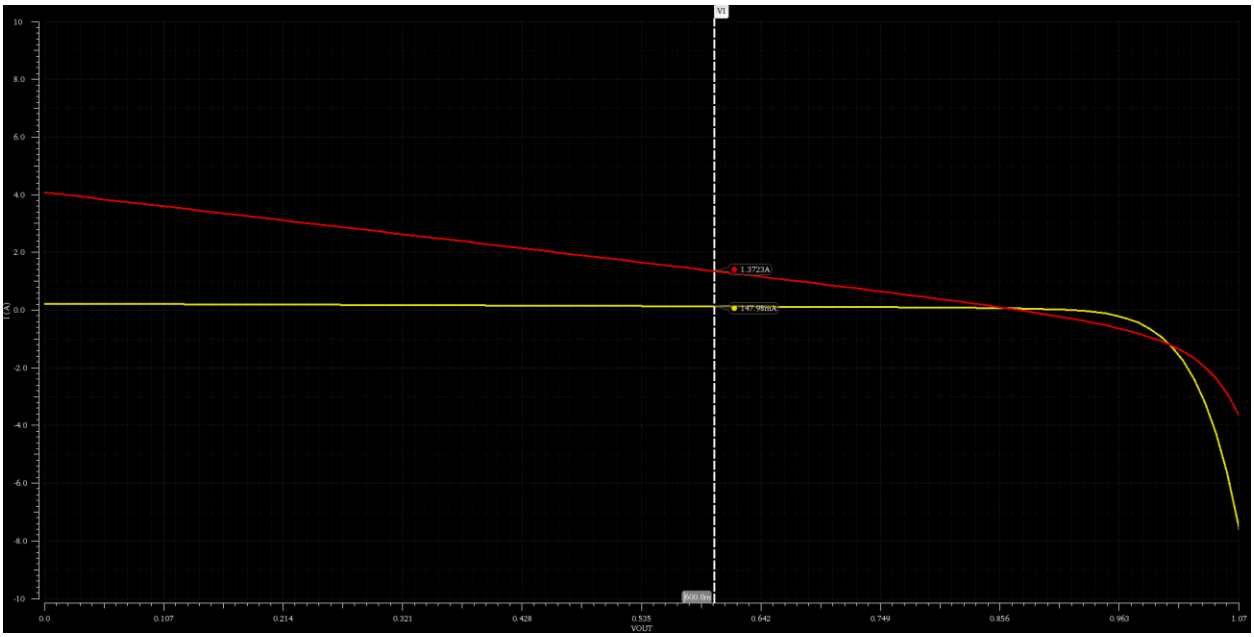

The y-axes ranges are (-10% to 10% relative error with 40uA) and x-axis is (0 to 1.2V-125mV = 1.075V).

Note that the percentage error is higher in the simple current mirror that reaches 1.3723% more current than the nominal required 40uA.

While the wide swing current mirror only is higher by 0.148% more current.

This curve was calculated using the formula of relative error:

$$\epsilon = \frac{\text{actual} - \text{nominal}}{\text{nominal}} \times 100 = \frac{\mathrm{I}(\mathrm{V_{out}}) - 40\ \mu\mathrm{A}}{40\ \mu\mathrm{A}} \times 100$$

7) **Rout vs. VOUT** (*take the inverse of the derivative of IBOUT plot*) for the two CMs in the current mirror operating region **(VOUT = 0 to VDD – *V**)** overlaid in the same plot. Use log scale on the y-axis. Add a cursor at **VOUT = VDD/2**.

- Comment on the difference between the two circuits.
- Does Rout change with VOUT? Why?

The y-axes ranges are (1k to 1G) and x-axis is (0 to 1.2V-125mV = 1.075V).

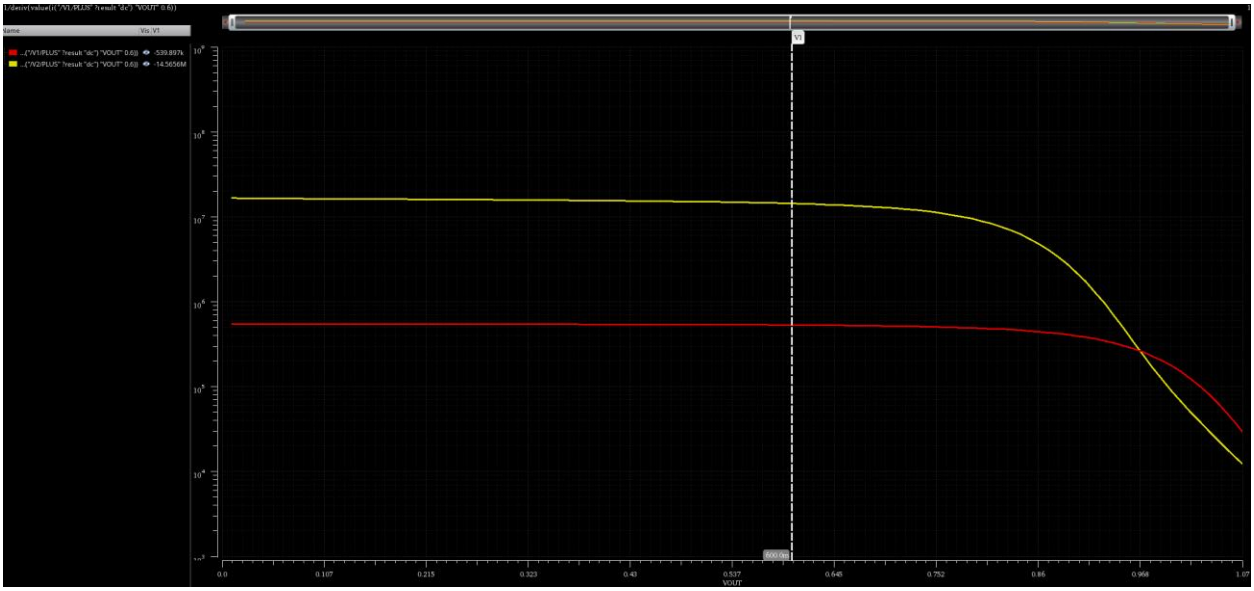

Not using a logarithmic scale will result in the following:

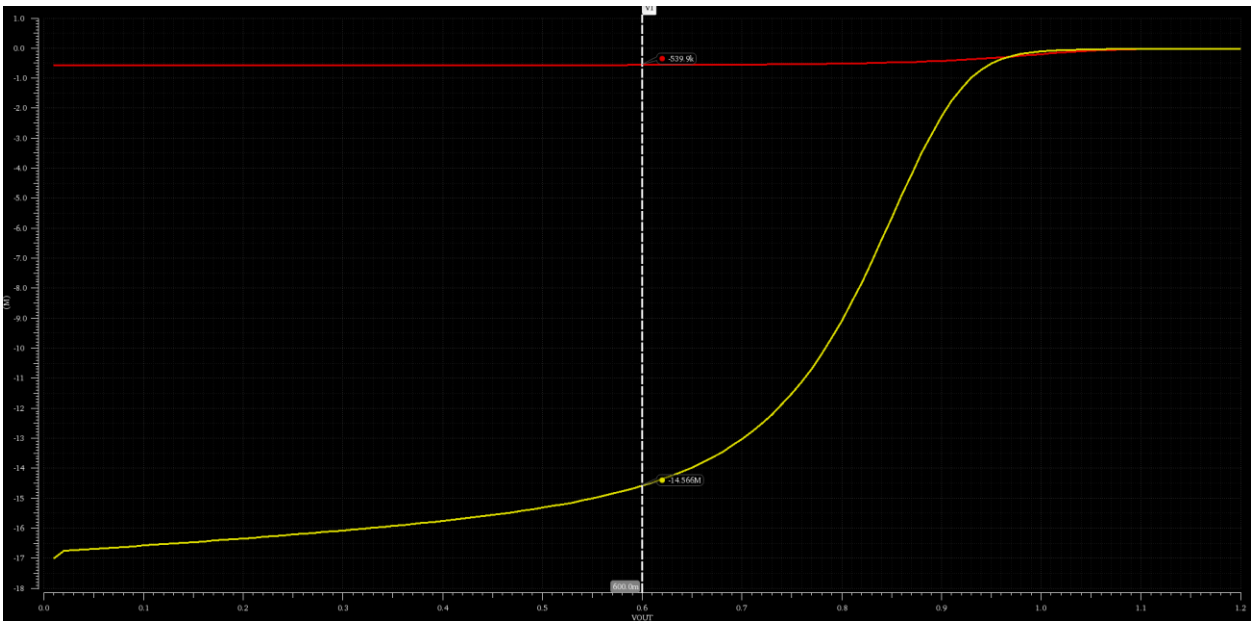

Rout changes with **Vout**, where it is equal to:

- **539.897k** for the simple CM
- **14.5656M** for the wide swing CM

This explains why the output current of the WS CM is more constant since it has a much higher Rout.

Rout changes with VOUT because that's the nature of the MOSFET. As Vout increases the difference (VDD-V*) decreases, and the device transition from saturation to triode.

8) Analytically calculate **Rout** of both circuits at **VOUT = VDD/2**. Compare with simulation results in a table.

For the simple current mirror:

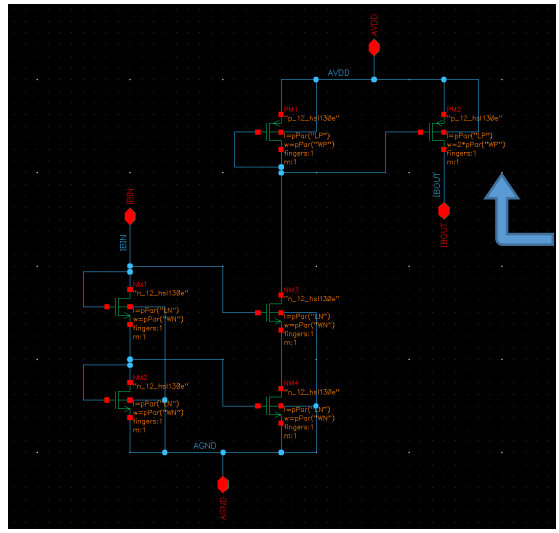

$$V_{DD} - V_{out} \geq V_2^*$$

$$if\ V_{out} = \frac{V_{DD}}{2}, \qquad then, \qquad V_2^* \leq 0.6V$$

$$\because V_2^* = 125mV, \qquad \therefore PM2\ in\ saturation$$

$$\therefore R_{out} = R_{LFD} = r_{o,PM2} = \frac{1}{1.854\text{u}} = 539.37\ k\Omega$$

For the wide swing current mirror:

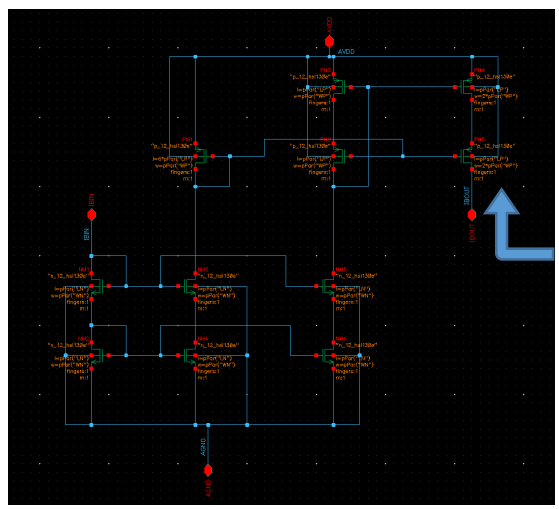

$$V_{DD} - V_{out} \geq V_4^* + V_5^*$$

$$if\ V_{out} = \frac{V_{DD}}{2}, \qquad then, \qquad V_4^* + V_5^* \leq 0.6V$$

$$\frac{g_m}{I_D} = \frac{2}{V^*}$$

$$\frac{g_m}{40\ \mu A} = \frac{2}{125mV}$$

$$g_m = \frac{80\mu}{125m} = 640\ \mu S$$

$$(close\ to\ the\ 638\mu S\ of\ the\ simulation)$$

$$R_{out} = R_{LFD,PM5} = r_{o,3}\left(1 + (g_m + g_{mb})R_{LFD,PM4}\right) = r_{o,3}\left(1 + (g_m + g_{mb})r_{o,4}\right)$$

$$R_{out} = \left(\frac{1}{29.18\text{u}}\right)\left(1 + (638\ \mu S + 122.4\mu S) \times \frac{1}{1.868\text{u}}\right) = 13.984\ M\Omega$$

	Simple CM	Wide swing CM
Simulation	539.897 kΩ	14.5656 MΩ
Hand Analysis	539.37 kΩ	13.984 MΩ

The simulation and hand analysis results are close and similar.

Lab Summary

- *In Part 1 I learned*
  - How to generate and use design charts for NMOS and PMOS transistors.
  - How to design a simple current mirror.
  - How to design a low-voltage current mirror.

- *In Part 2 I learned*
  - How to do a hierarchical design in Cadence tools.
  - How the output resistance of a simple current mirror changes with the output voltage.
  - How the output resistance of a low-voltage current mirror changes with the output voltage.

Acknowledgements

Thanks to all who contributed to these labs. Special thanks to Dr. Sameh A. Ibrahim for reviewing and editing the labs. If you find any errors or have suggestions concerning these labs, contact Hesham.omran@eng.asu.edu.eg.

[END OF LAB 5]

Kerollos Saad Thomas