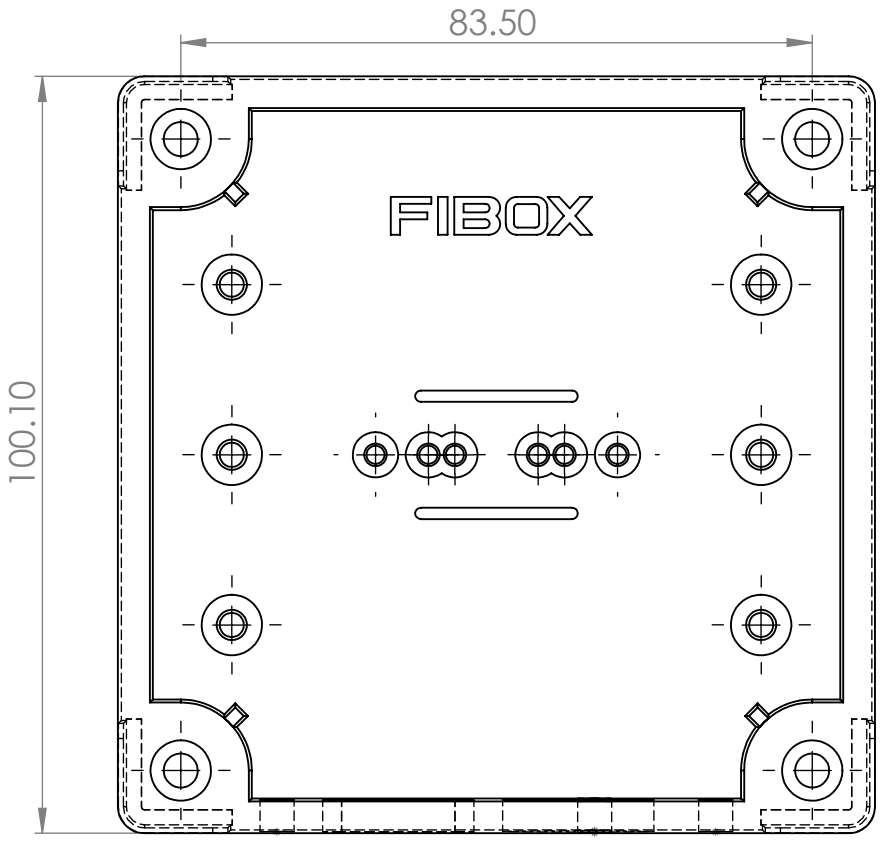

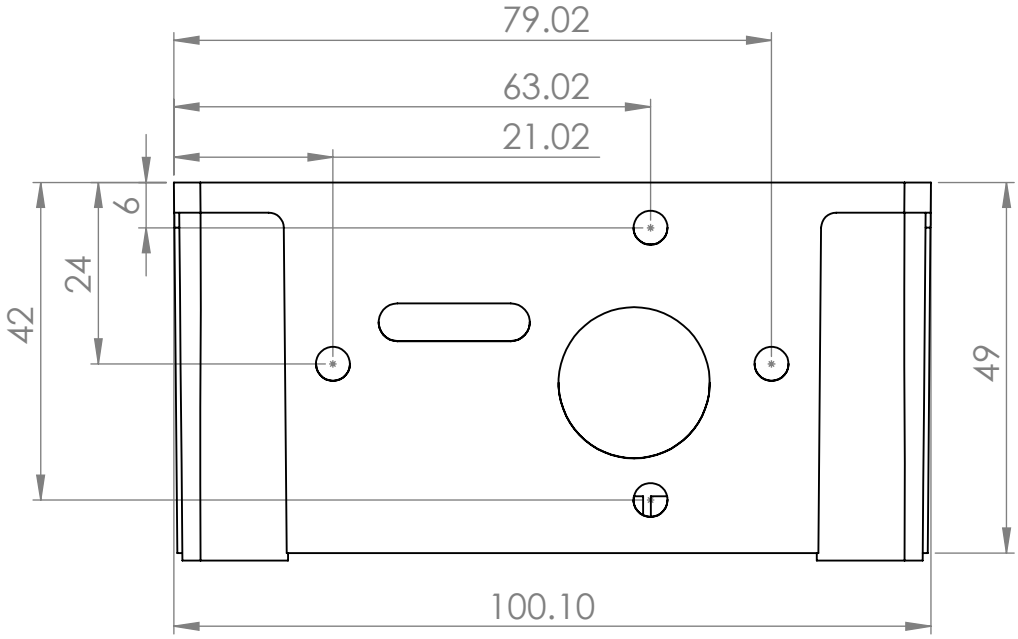

UNLESS OTHERWISE SPECIFIED: DIMENSIONS ARE IN MILLIMETERS SURFACE FINISH: TOLERANCES: LINEAR: ANGULAR:	FINISH:	DEBURR AND BREAK SHARP EDGES	DO NOT SCALE DRAWING REVISION 3

	NAME	SIGNATURE	DATE
DRAWN			
CHK'D			
APPV'D			
MFG			
Q.A			

TITLE:

sniffy v1 enclosure

MATERIAL:

SOLIDWORKS Educational Product. For Instructional Use Only

DWG NO.

SNFY_003-FIBOX

A4

WEIGHT:

SCALE:1:1

SHEET 1 OF 1