Technical Report: **96251700556.REVISION 1** JUNE 27, 2025
Date Received: JUNE 19, 2025

DAI VIET CO., LTD
NO. 276/19/13 TRAN HUNG DAO STREET, DONG B QUARTER, DONG HOA WARD, DI AN CITY, BINH DUONG PROVINCE, VIET NAM

Sample Description:	FULL LOFT BED WITH SHELVES AND STAIR-K		
Vendor:	DAI VIET CO., LTD	Sample Size:	/
Manufacturer:	DAI VIET CO., LTD	VPN:	/
Buyer:	GIGACLOUD	SKN/SKU No.:	N709P333738/ N709P333739
Agent:	/		/
Labeled Age Grade:	/	PO No.:	V370VDY20250611WM
Appropriate Age Grade:	/	Ref #:	/
Client Specified Age Grade:	/	Country of Origin:	VIETNAM
Tested Age Grade:	/	Assortment No.:	/
UPC Code:	/	Department No.:	/
Phase of Production:	/	Item#:	/
Color:	WHITE + NATURAL/ WHITE+BLUE	Date of Production:	/
Program:	/	Model/Style#:	/
Previous No:	N/A	Country of Destination:	USA

TEST PROPERTY	PASS	FAIL	DATA	N/A	Remark
CPSIA Total lead content in Surface Coating	X				
CPSIA Total Lead Content In Substrate Materials	X				
15 U.S.C 1278a Total Lead Content	X				
16 CFR 1213 Bunk Beds	X				
16 CFR 1513 Requirements for Bunk Beds	X				
ASTM F1427-21e1 Bunk Beds	X				

Note(s):

- This report includes the test result(s) which was conducted & reviewed by Analytical department.
- This report was revised on July 08, 2025 to update test result and photo.

Bureau Veritas
Consumer Products Services (VN) Ltd.
Lot C7-C9, Conurbation 2, Cat Lai Industrial Zone, Thanh My Loi Ward, Thu Duc City, HCMC, Vietnam
Tel: 84-028-37421604~6 Fax: 84-028-37421603
website:www.bureauveritas.com/cps

This report is governed by, and incorporates by reference, the Conditions of Testing as posted at the date of issuance of this report at http://www.bureauveritas.com/home/about-us/our-business/cps/about-us/terms-conditions/ and is intended for your exclusive use. Any copying or replication of this report to or for any other person or entity, or use of our name or trademark, is permitted only with our prior written permission. This report sets forth our findings solely with respect to the test samples identified herein. The results set forth in this report are not indicative or representative of the quality or characteristics of the lot from which a test sample was taken or any similar or identical product unless specifically and expressly noted. Our report includes all of the tests requested by you and the results thereof based upon the information that you provided to us. Measurement uncertainty is only provided upon request for accredited tests. Statements of conformity are based on simple acceptance criteria without taking measurement uncertainty into account, unless otherwise requested in writing. You have 60 days from date of issuance of this report to notify us of any material error or omission caused by our negligence or if you require measurement uncertainty; provided, however, that such notice shall be in writing and shall specifically address the issue you wish to raise. A failure to raise such issue within the prescribed time shall constitute your unqualified acceptance of the completeness of this report, the tests conducted and the correctness of the report contents.

If there is any question regarding this report, please contact the following lab personnel:

Administrative inquiries, please contact:
Primary Contact: Elise Vo, Tel: 84-028-37421-604 ~ 6, Ext: 394; email: elise.vo@bureauveritas.com
Back-up Contact: Cynthia Vuong, Tel: 848-37421-604 ~ 6, Ext: 641; email: cynthia.vuong@bureauveritas.com

Technical inquiries, please contact:
Primary Contact: Terry Nguyen, Tel: 84-028-37421-604 ~ 6, Ext: 355; email: terry.nguyen@bureauveritas.com
Back-up Contact: Louis Tran, Tel: 84-028-37421-604 ~ 6, Ext: 339; email: louis.tran@bureauveritas.com

BUREAU VERITAS CONSUMER PRODUCTS SERVICES (VN) LTD.

TERRY NGUYEN
LAB MANAGER – HARDLINE, TOYS & JUVENILE PRODUCTS DIVISION

SAMPLE DESCRIPTION ASSIGNED BY LABORATORY

Test Item(s)	Sample description/ Location	Material	Style(s)
I001	Natural Coating (Wood)	Coating	-
I002	MDF	Wood	-
I003	Plywood	Wood	-
I004	Silver Metal (Bolt)	Metal	-
I005	Yellow Metal (Flat Head Screw)	Metal	-
I006	Yellow Metal (Round Head Screw)	Metal	-
I007	Silver Metal (L Bracket)	Metal	-
I008	Silver Metal (Barrel Nut)	Metal	-
I009	Silver Metal (Flat Head Screw)	Metal	-
I010	Silver Metal (U Bracket)	Metal	-
I011	Black/ Yellow/ Red/ White Coating (Ca Prop 65 Label)	Coating	-
I012	Black/ White Coating (Country Origin Label)	Coating	-
I013	Red/ Yellow/ White Coating (Maximum Weight Label)	Coating	-
I014	Yellow/ Black Coating (Warning Label)	Coating	-
I015	Black/ White Coating (Tracking Label)	Coating	-
I016	Blue Coating (Wood)	Coating	-

TEST RESULT

Total Lead Content in Surface Coating
- United States Consumer Product Safety Improvement Act (CPSIA) of 2008, Section 101(a)(2) / United States Code of Federal Regulations (CFR), Title 16, Part 1303

Test Method : U. S. CPSC-CH-E1003-09.1 (February 25, 2011).

Maximum Allowable Limit :	**90 mg/kg**

-	**Unit**	**Result**	
Test Item(s)	-	I001+I011+I012	I013+I014+I015
Parameter	-	-	-
Total Lead (Pb)	mg/kg	ND	ND
Conclusion	-	PASS	PASS

-	**Unit**	**Result**
Test Item(s)	-	I016
Parameter	-	-
Total Lead (Pb)	mg/kg	ND
Conclusion	-	PASS

Note / Key :

ND = Not detected NA = Not applicable “>” = Greater than
mg/kg = milligram(s) per kilogram = ppm = part(s) per million
Reporting Limit (mg/kg) : 10

Remark :

- Component(s) in Test Item(s) may not able to be tested individually due to overlapping.

TEST RESULT

Total Lead Content in Substrate:
- United States Consumer Product Safety Improvement Act (CPSIA) Section 101(a)(2)

Test Method : U. S. CPSC Test Method CPSC-CH-E1001-08.3 (November 15, 2012) or U. S. CPSC Test Method CPSC-CH-E1002-08.3 (November 15, 2012).

Maximum Allowable Limit :	**100 mg/kg**

-	**Unit**	**Result**			
Test Item(s)	-	I002+I003	I004	I005	I006
Parameter	-	-	-	-	-
Total Lead (Pb)	mg/kg	ND	ND	ND	ND
Conclusion	-	PASS	PASS	PASS	PASS

-	**Unit**	**Result**			
Test Item(s)	-	I007	I008	I009	I010
Parameter	-	-	-	-	-
Total Lead (Pb)	mg/kg	ND	ND	ND	ND
Conclusion	-	PASS	PASS	PASS	PASS

Note / Key :

ND = Not detected NA = Not applicable “>” = Greater than
mg/kg = milligram(s) per kilogram = ppm = part(s) per million 10000 mg/kg = 1 % % = percent
Reporting Limit (mg/kg) : 10

Remark :

- According to Children’s Products Containing Lead; Exemptions for Certain Electronic Devices; Final Rule, exemption were granted to steel alloy containing up to 0.35 % lead by weight, aluminum containing up to 0.4 % lead by weight and copper-based alloy containing up to 4 % lead by weight.
- According to Petition Requesting Exception from Lead Content Limits; Notice Granting Exception, exemption was granted to certain aluminum alloy on certain ride-on children`s products containing up to 0.03 % lead weight.

TEST RESULT

Total Lead Content:
15 U.S.C 1278a-Children Product Containing Lead

Maximum Allowable Limit :	**100 mg/kg**

-	**Unit**	**Result**				
Test Item(s)	-	I001+I011+I012	I013+I014+I015	I002+I003	I004	I005
Parameter	-	-	-	-	-	-
Total Lead (Pb)	mg/kg	ND	ND	ND	ND	ND
Conclusion	-	PASS	PASS	PASS	PASS	PASS

-	**Unit**	**Result**				
Test Item(s)	-	I006	I007	I008	I009	I010
Parameter	-	-	-	-	-	-
Total Lead (Pb)	mg/kg	ND	ND	ND	ND	ND
Conclusion	-	PASS	PASS	PASS	PASS	PASS

-	**Unit**	**Result**
Test Item(s)	-	I016
Parameter	-	-
Total Lead (Pb)	mg/kg	ND
Conclusion	-	PASS

Note / Key :

ND = Not detected NA = Not applicable “>” = Greater than
mg/kg = milligram(s) per kilogram = ppm = part(s) per million 10000 mg/kg = 1 % % = percent
Reporting Limit (mg/kg) : 10

Remark :

- Tested per client’s request

RESULT(S):

REQUIREMENTS FOR BUNK BEDS (FHSA, Title 16, CFR, Part 1213 & 1513)

Section	Description	Results
1213.3 1513.3	Requirements	
1213.3(a) 1513.3(a)	Guardrails	
1213.3(a)(1) 1513.3(a)(1)	Two guardrails required if bed is > 30 inches from ground	M
1213.3(a)(2) 1513.3(a)(2)	One guardrail shall be continuous	M
1213.3(a)(3) 1513.3(a)(3)	No greater than 15 inches between either end	M
1213.3(a)(4) 1513.3(a)(4)	Bunk Beds with ladder, continuous guardrail on other side	M
1213.3(a)(5) 1513.3(a)(5)	Guardrails attached so they cannot be removed without releasing a device	M
1213.3(a)(6) 1513.3(a)(6)	The upper edge shall be no less than 5 inches above top surface	M
1213.3(a)(7) 1513.3(a)(7)	No openings in the structure between lower edge and underside	M
1213.3(b) 1513.3(b)	Bed End Structures	
1213.3(b)(1) 1513.3(b)(1)	The upper edge of end structure shall be at least 5 inches above mattress	M
1213.3(b)(2) 1513.3(b)(2)	No openings in the structure above foundation of the upper bunk that permits passage of the wedge block	M
1213.3(b)(3) 1513.3(b)(3)	Tested in accordance with Section 1213.4(c)	NA
1213.3(b)(4) 1513.3(b)(4)	Neck entrapment requirements of Section 1213.4(c)(3)	NA
1213.5 1513.5	Marking and Labeling	
1213.5(a) 1513.5(a)	Permanent label with name and address, model # and date code	M
1213.5(b) 1513.5(b)	Permanent Warning Label placement	M
1213.6 1513.6	Instructions	
1213.6(a) 1513.6(a)	Size of mattress and foundation	M
1213.6(b) 1513.6(b)	Safety Warning	-
1213.6(b)(1) 1513.6(b)(1)	Do not allow children under 6 years of age to use the upper bunk	M

REQUIREMENTS FOR BUNK BEDS (FHSA, Title 16, CFR, Part 1213 & 1513)

Section	Description	Results
1213.6(b)(2) 1513.6(b)(2)	Use guardrails on both sides of the upper bunk	M
1213.6(b)(3) 1513.6(b)(3)	Prohibit horseplay on or under beds	M
1213.6(b)(4) 1513.6(b)(4)	Prohibit more than one person on upper bunk	M
1213.6(b)(5) 1513.6(b)(5)	Use ladder for entering or leaving upper bunk	M
1213.6(b)(6) 1513.6(b)(6)	If the bed is placed against a wall, use full length guardrail along wall	M

M = Meet NM = Not Meet NA = Not Applicable NT = Not Test R = Refer to Comment Section

RESULT(S):

STANDARD CONSUMER SAFETY SPECIFICATION FOR BUNK BEDS (ASTM F1427-21e1)

Section	Requirement	Result
4	Performance Requirements	
4.1	Vertical Protrusions	-
4.1.1	Vertical protrusions along the top inside surface	M
4.1.2	Cap used along the top surface of upper bunk	NA
4.2	Fit of Top Bed to Bottom Bed	NA
4.3	Mattress and Foundation Size and Fit (Top Bed)	M
4.4	Mattress Size and Fit (Lower Foundation)	NA
4.5	Upper and Lower Foundation Support Systems	-
4.5.1	Horizontal position of the mattress and the foundation	M
4.5.2	Utilized event cross-members	M
4.5.3	Release of positive fastening devices or use of hand tools	M
4.5.4	Static load for the foundation support system	M
4.6	Side Rails	-
4.6.1	Bolt-On Side Rails	M
4.6.2	Hook-On Side Rails	NA
4.6.3	Side rail attachments	M
4.7	Guardrails	-
4.7.1	Presence of guardrails	M
4.7.2	Requirement of attachment	M
4.7.3	Requirement of height of the upper edge above the sleeping surface	M
4.7.4	Opening of the guardrail	M
4.7.5	Opening between the either end of the guardrail and the bed end structure	M
4.8	Bed Structure	-
4.8.1	The upper edge of the upper bunk end structures	M
4.8.2	Openings in the rigid end structures of the upper bunk	M
4.8.3	Openings in the end structures of the lower bunk	NA
4.8.4	Neck entrapment requirement of all portions of the boundary of any opening of the lower bunk end structure	NA
4.9	Ladders	-
4.9.1	Presence of ladder	M
4.9.2	Dimension requirement of ladder	M
4.9.3	Openings between ladder step and upper bunk boundary	M
4.9.4	Gaps between edge of mattress and interior vertical stile	NA
4.10	Metal beds: frame and fastenings	NA
6	Marking and Labeling	M
7	Instructional Literature	M

M = Meet NM = Not Meet NA = Not Applicable NT = Not Test R = Refer to Comment Section

BLUE COLOR

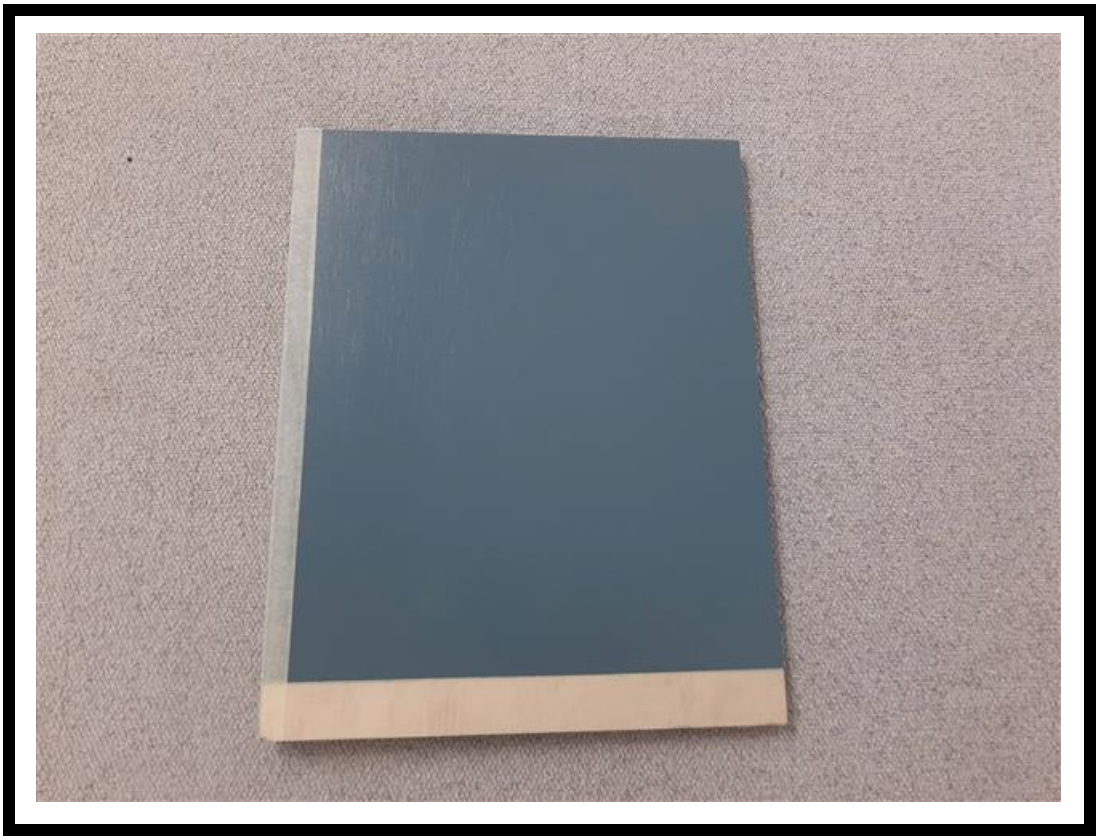

NATURAL COLOR

WHITE COLOR

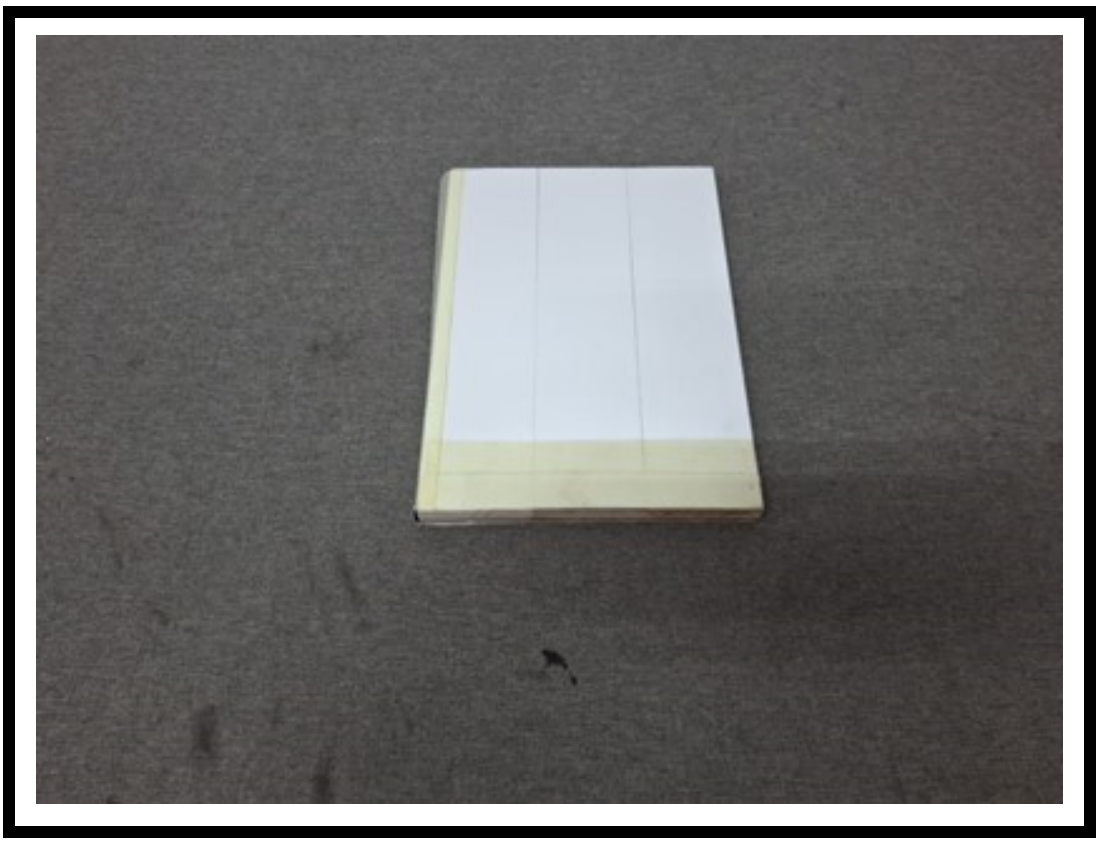

LABELS ON PRODUCT

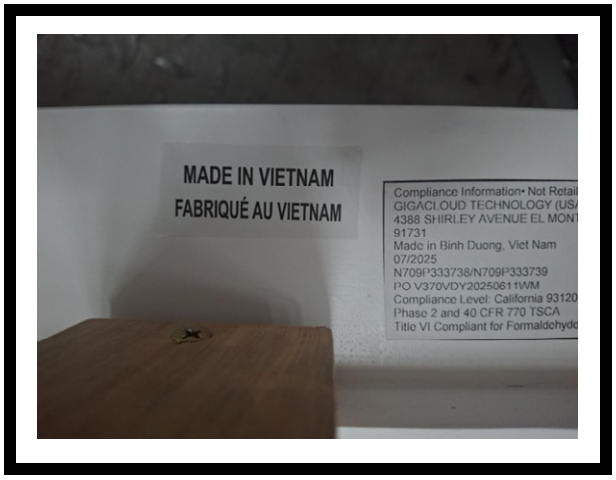

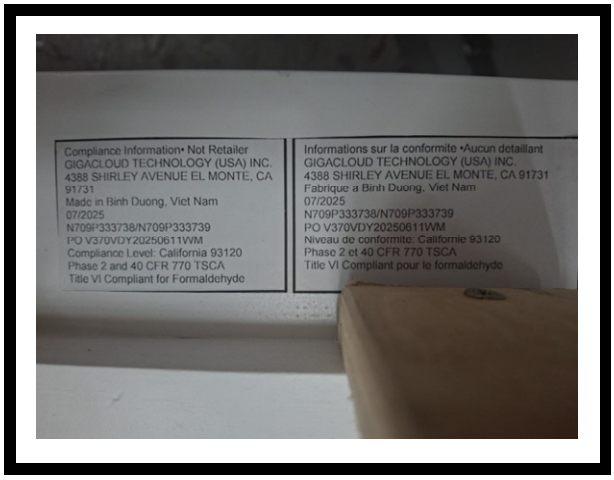

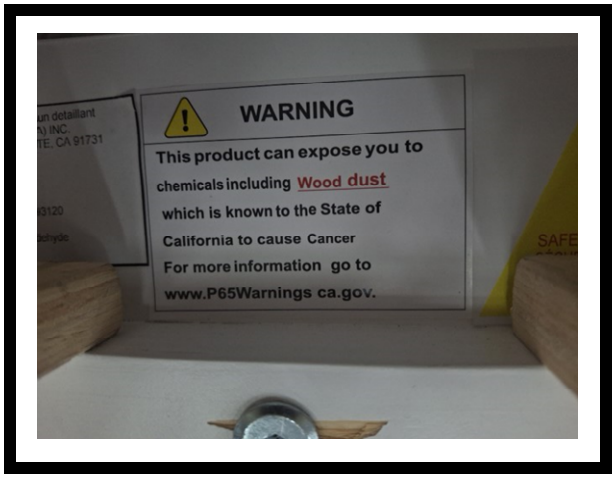

WARNING LABEL

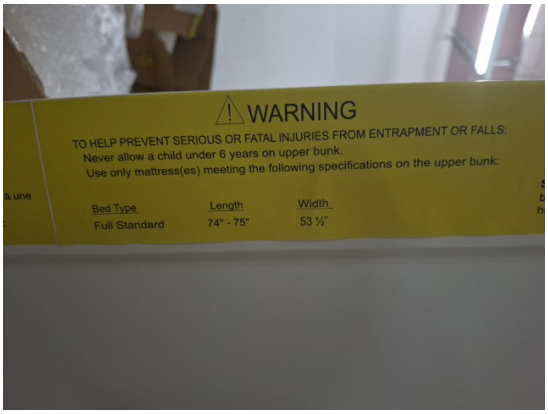

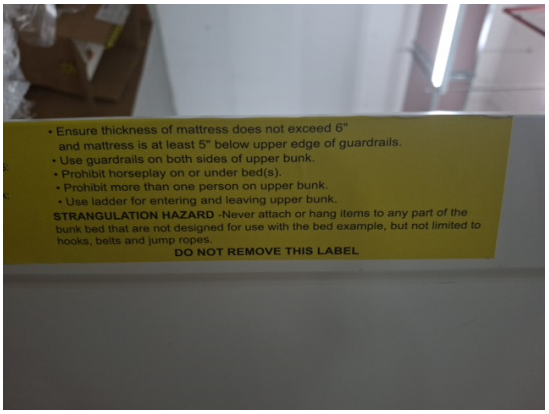

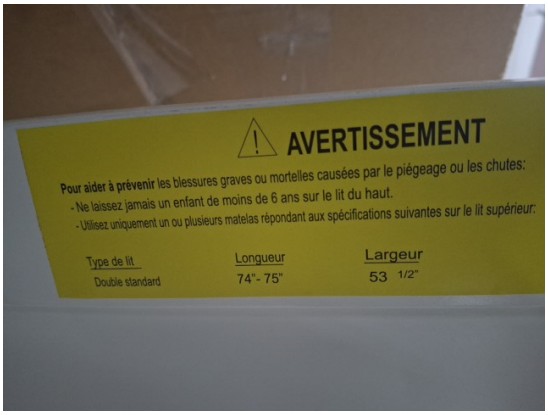

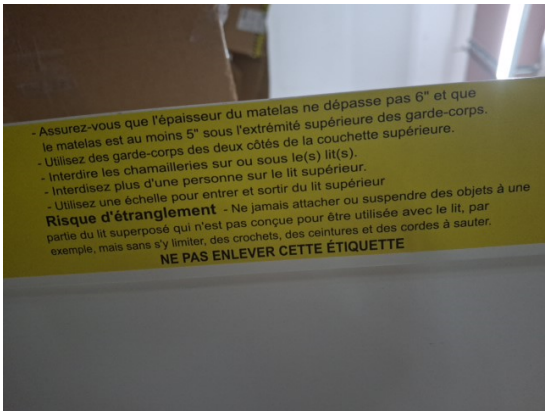

WARNING LABEL

AVERTISSEMENT

Pour aider à prévenir les blessures graves ou mortelles causées par le piégeage ou les chutes:
- Ne laissez jamais un enfant de moins de 6 ans sur le lit du haut.
- Utilisez uniquement un ou plusieurs matelas répondant aux spécifications suivantes sur le lit supérieur:

Type de lit	Longueur	Largeur
Double standard	74"- 75"	53 1/2"

- Assurez-vous que l'épaisseur du matelas ne dépasse pas 6" et que le matelas est au moins 5" sous l'extrémité supérieure des garde-corps.
- Utilisez des garde-corps des deux côtés de la couchette supérieure.
- Interdire les chamailleries sur ou sous le(s) lit(s).
- Interdisez plus d'une personne sur le lit supérieur.
- Utilisez une échelle pour entrer et sortir du lit supérieur

Risque d'étranglement - Ne jamais attacher ou suspendre des objets à une partie du lit superposé qui n'est pas conçue pour être utilisée avec le lit, par exemple, mais sans s'y limiter, des crochets, des ceintures et des cordes à sauter.

NE PAS ENLEVER CETTE ÉTIQUETTE

WARNING

TO HELP PREVENT SERIOUS OR FATAL INJURIES FROM ENTRAPMENT OR FALLS:
Never allow a child under 6 years on upper bunk.
Use only mattress(es) meeting the following specifications on the upper bunk:

Bed Type	Length	Width
Full Standard	74" - 75"	53 ½"

- Ensure thickness of mattress does not exceed 6" and mattress is at least 5" below upper edge of guardrails.
- Use guardrails on both sides of upper bunk.
- Prohibit horseplay on or under bed(s).
- Prohibit more than one person on upper bunk.
- Use ladder for entering and leaving upper bunk.

STRANGULATION HAZARD -Never attach or hang items to any part of the bunk bed that are not designed for use with the bed example, but not limited to hooks, belts and jump ropes.

DO NOT REMOVE THIS LABEL

CARTON LAYOUT

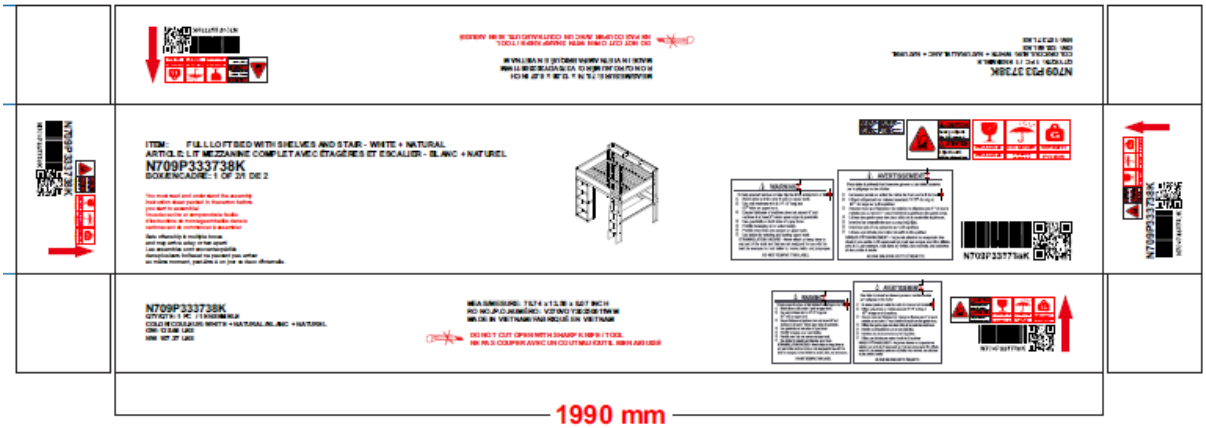

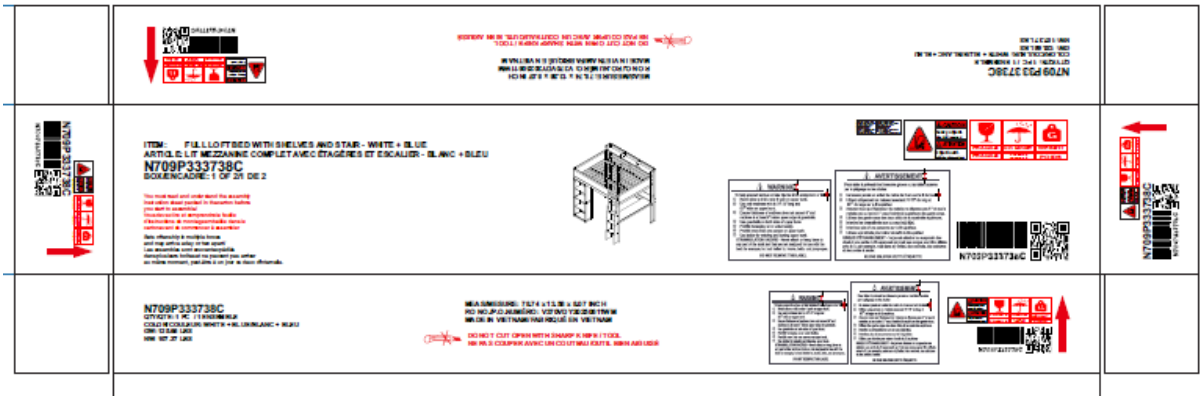

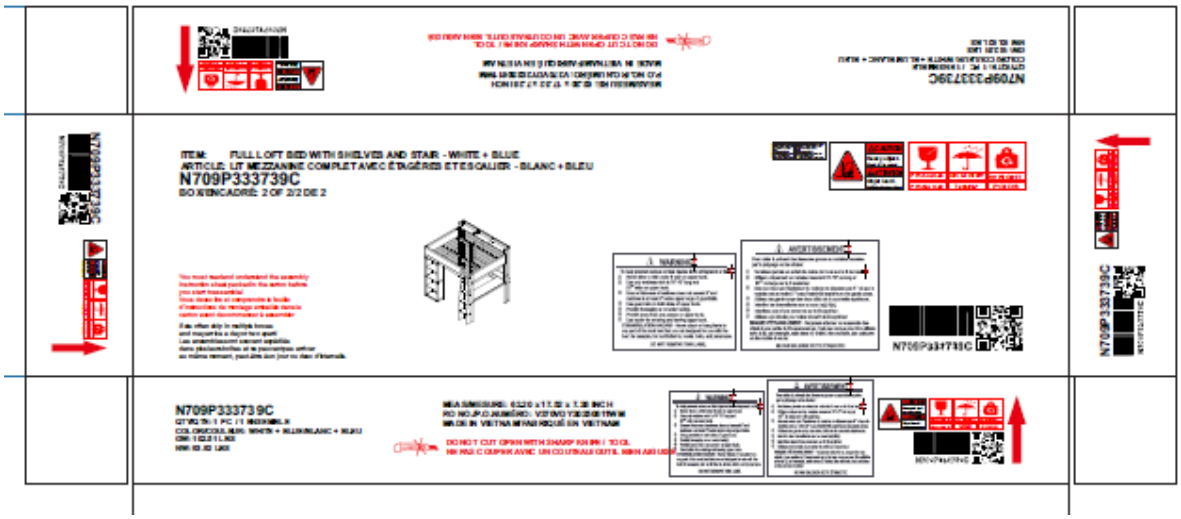
ITEM: FULL LOFT BED WITH SHELVES AND STAIR - WHITE + BLUE
ARTICLE: LIT MEZZANINE COMPLET AVEC ÉTAGÈRES ET ESCALIER - BLANC + BLEU
N709P333739C
BOX ENCADRÉ: 2 OF 2/2 DE 2
N709P333739C

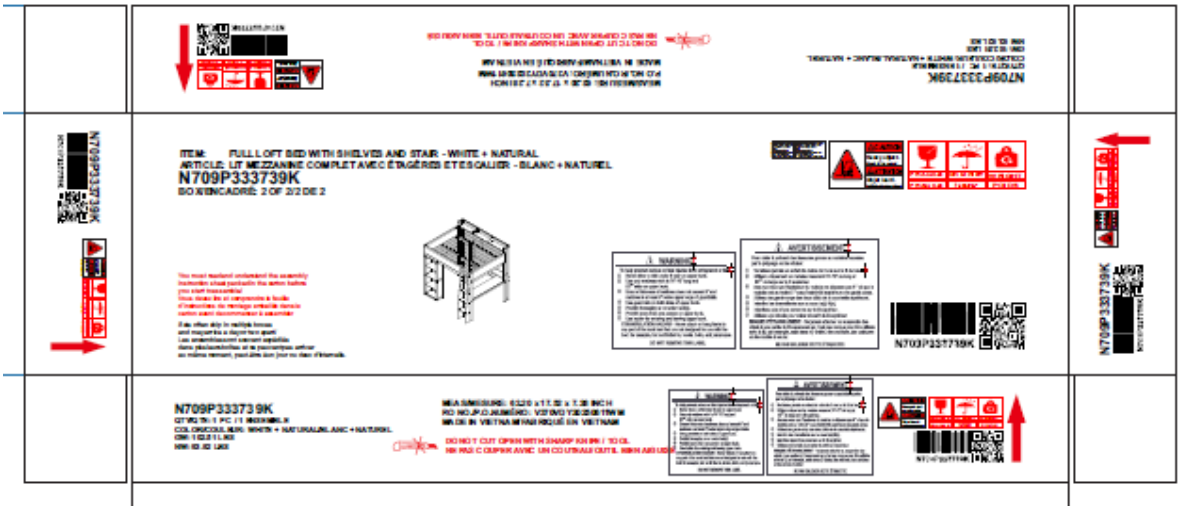
ITEM: FULL LOFT BED WITH SHELVES AND STAIR - WHITE + NATURAL
ARTICLE: LIT MEZZANINE COMPLET AVEC ÉTAGÈRES ET ESCALIER - BLANC + NATUREL
N709P333739K
BOX ENCADRÉ: 2 OF 2/2 DE 2
N709P333739K